UCONN

PROCUREMENT SERVICES

CAPITAL PROJECTS AND
FACILITIES PROCUREMENT

PROJECT MANUAL

FOR

AVERY POINT ACADEMIC BUILDING ROOF REPLACEMENT

UNIVERSITY OF CONNECTICUT

STORRS CAMPUS
Storrs, Connecticut

PROJECT NUMBER: 300098

FEBRUARY 1, 2019

ARCHITECT/ENGINEER OF RECORD:
SIMPSON GUMPERTZ & HEGER, INC.

UNIVERSITY OF CONNECTICUT
AVERY POINT ACADEMIC BUILDING ROOF REPLACEMENT
PROJECT NUMBER: 300098

The following Bid Documents and all Bid Clarifications are to be obtained by accessing the following web link and clicking on the Project Number: 300098
http://cpca.uconn.edu/construction-current-opportunities-open-bids/

Table of Contents

Documents:	**# of Pages**
Table of Contents	1
Invitation to Bid	3
List of Prequalified Contractors	1
Instruction to Bidders	20
Form of Proposal/Bid Submission	29
Prevailing Wages Docs (Wages to come)	23
AIA 101 - Standard Form of Agreement – Draft	9
AIA 101 – Exhibit A – Insurance Requirements	3
AIA 101 – Exhibit F – State of Connecticut Terms and Conditions	6
AIA 201 - General Conditions	54
Project Specifications	464
Drawings	13
Labor Rate Sheet (example form) – for information only and will be filled out if Contractor is low bidder. Form can be found at http://paes.uconn.edu/contractors-working-at-uconn/	2

INVITATION TO BID

February 1, 2019

DUE DATE: **February 26, 2019**
TIME: **2:00 p.m.**
LOCATION: **University of Connecticut**
Capital Projects & Facilities Procurement
3 Discovery Drive, Unit 6076
Storrs, CT 06269
Attn: Cesar Alonzo

The University of Connecticut is accepting sealed bids for:

UNIVERSITY OF CONNECTICUT
AVERY POINT ACADEMIC BUILDING ROOF REPLACEMENT
PROJECT NUMBER: 300098

Bids must be submitted on the forms supplied and in the manner specified within the Bid Documents. This invitation is **Only Open to Previously Prequalified Roofing Contractors.**

PROJECT DESCRIPTION:

The Avery Point Academic Building was constructed 1942. The original roof has had many repairs but has surpassed the end of its useful life. This project will replace the flat built-up roof system with a new PVC roof system. This scope will require raising the existing steel dunnage and modifying the mechanical connections to accommodate the new roof system heights, infill the windows that are currently blacked out and cover the masonry walls with metal cladding on the west and south elevations. Replace the vinyl cladding on the stair tower penthouse walls with metal cladding (similar to the third-floor auditorium walls) to account for the increased roof height. Replace the guardrail with a new weighted guardrail system and replace the perimeter gutter, down leaders, and asphalt shingles as necessary to integrate the roof into the gutter. General Clean-Up/Rehabilitation

Anticipated Start date would be May 13, 2019 with a project duration of 8 weeks.

PRE-BID CONFERENCE:

There will be a job-site walkthrough on **Friday, January 8, 2019 at 1:00 PM.** This walkthrough is ***not mandatory***; however, interested bidders are ***strongly encouraged*** to attend to view existing conditions. Meet at the **Conference Room 100, Physical Plant Office Building 7, 1804 Shennecossett Road, Groton, CT at the UConn Avery Point Campus.** The Pre-Bid Conference will commence promptly at the time noted herein. There are limited short-term visitor parking spaces around the Purchasing Building. The North Parking Garage is recommended to all vendors as parking on campus is at your own risk.

REQUEST FOR INFORMATION PROCEDURE:

All Requests for Information ("RFI") must be received in writing no later than **2:00PM on Friday, January 15, 2019** and emailed to cesar.alonzo@uconn.edu using the RFI form included within the bid documents. Include in the subject line: RFI – Avery Point Academic Building Roof Replacement, Project #300098. **Questions received verbally will not be answered.** All answers will be published by written Bid

Clarification. Extensions of RFI deadlines may only be revised via written Bid Clarification. It is the responsibility of all bidders to verify that they are current with all Bid Clarifications issued prior to bid submission.

Bids will be accepted at the Office of Capital Projects and Facilities Procurement, 3 Discovery Drive, Storrs, CT 06269 until 2:00 P.M. local time on Tuesday, February 26, 2019 at which time they will be publicly opened and read.

The Bid shall be accompanied by a Bid Bond in the amount of ten percent (10%) of the amount bid. All bonds required for this Project shall be acceptable to the University and, as a minimum, issued through a bonding company licensed to transact such business in the State of Connecticut and named on the current list of "Surety Companies Acceptable on Federal Bonds" as published in the "Treasury Department Circular 570".

The successful Contractor shall be required to provide a Labor and Material Payment Bond and a Performance Bond for one hundred percent (100%) of the Contract price.

The "Set-Aside" for this project is that (1) not less than thirty (30%) of the total Contract Price be awarded to subcontractors who are certified by the Connecticut Department of Administrative Services as "Small Business Enterprises" ("SBEs") and (2) not less than ten (10%) of the total Contract Price be awarded to subcontractors who are certified by the Connecticut Department of Administrative Services as "Minority Business Enterprises" ("MBEs") (the 10% set aside for MBEs may be included in the 30% set aside for SBEs). The general contractors are responsible for ensuring that they and the SBEs they have selected are eligible contractors, and that they meet State requirements.

The University of Connecticut is committed to increasing participation and enrollment of Small and Minority Businesses (S/MBE's) on our contracts. It is expected that those contracting with us will give thoughtful consideration both to the approach they use in their selection of the eligible Connecticut-certified S/MBE's that they will utilize and in the maximizing of contracting and work opportunities for S/MBE's. To ensure that you are exploring all possible ways to be inclusive, included below is a sample of specific possibilities for breakout of the schedule of values. We appreciate your partnering with us to ensure that S/MBE's are given an opportunity to work, contribute and grow their businesses on University projects.

Specific possibilities for Inclusion of S/MBE's in the Schedule of Values
*Bold indicates suggested categories (if applicable)

01 – General Conditions	**Temporary Electric & Lighting** **Cleaning**
02 – Existing Conditions	**Demolition & Salvage** **Abatement**
03 – Concrete	**Sidewalks & Flatwork**
05 - Metals	**Metal Stairs & Railings** **Miscellaneous Metals** **Decorative Metal**
06 – Woods Plastics & Composites	**Rough Carpentry & Blocking**
07 – Thermal & Moisture Protection	**Insulation**

	Sealers & Waterproofing
08 – Openings	**Door Hardware**
09 – Finishes	**Tile Installations** **Acoustic Ceilings** **Flooring Installations** **Painting & Coatings** **Firestopping**
10 – Specialties	**Signage**
12 – Furnishings	**Window Treatments**
14 – Conveying Equipment	**Lifts**
23 – HVAC (Heating, Ventilating, Air Conditioning)	**HVAC Duct Insulation**
27 – Communications	**Low Voltage Cabling**
28 – Electronic Safety & Security	**Fire Alarm & Security Wiring**
32 – Exterior Improvements	**Retaining Walls** **Paving** **Fencing & Gates** **Landscaping**
44 – Pollution & Waste Control Equipment	**Trucking**

The University reserves the right to reject any or all Bids, in whole or in part, to award any item, group of items, or total Bid, and to waive any informality or technical defects, if it is deemed to be in the best interests of the University.

No Bidder may withdraw its Bid within ninety (90) days of the date of the Bid opening. Should there be reasons why the Contract cannot be awarded within the specified period, the time may be extended by mutual agreement between the University and the Bidder.

Cesar E Alonzo, PE
Senior Procurement Specialist
Capital Projects and Facilities Procurement

Avery Point Academic Building Roof Replacement

Project #300098

Prequalified Contractors

1	**Commercial Roofing & Contracting, Inc.** Putnam, CT
2	**G. Donovan Associates, Inc.** North Franklin, CT
3	**Greenwood Industries, Inc.** North Haven, CT
4	**JHS Restoration, Inc.** South Windsor, CT
5	**Silktown Roofing, Inc.** Manchester, CT
6	**Titan Roofing, Inc.** Springfield, MA
7	**Young Developers, LLC** Hamden, CT

INSTRUCTIONS TO PREQUALIFIED BIDDERS

ARTICLE 1 GENERAL PROVISIONS

1.1 Connecticut Sales and Use Tax

1.1.1 The University of Connecticut is a tax-exempt institution. The Contractor shall be familiar with the current regulations of the Department of Revenue Service. The tax on materials or supplies exempted by such regulations shall not be included as part of the Bid. A Sales Tax Certificate is available from the Purchasing Department upon written request.

1.2 Contractor's Qualifications

In the Pre-Qualification to Bid Documents for this project, the University has reserved the right to request additional information from prospective Bidders beyond what may have been submitted in any Application and Statement of Qualifications in response to the Invitation to Pre-Qualify. The University has also reserved the right to find any Bidder to be non-responsible with respect to a specific project notwithstanding the fact that the Bidder may have previously been pre-qualified pursuant to the pre-qualification process. The University reaffirms these reservations of rights. In finding that a Bidder is non-responsible, the University may rely upon any information obtained prior to or subsequent to a finding that Bidder is pre-qualified.

1.2.1 CGS 4b-91 Requires each bid submitted shall include a copy of a prequalification certificate issued by the Commissioner of Administrative Services. The bid shall also be accompanied by an update bid statement in such form as the Commissioner of Administrative Services prescribes. The form for such update bid statement shall provide space for information regarding all projects completed by the bidder since the date the bidder's prequalification certificate was issued or renewed, all projects the bidder currently has under contract, including the percentage of work on such projects not completed, the names and qualifications of the personnel who will have supervisory responsibility for the performance of the contract, any significant changes in the bidder's financial position or corporate structure since the date the certificate was issued or renewed, any change in the contractor's qualification status as determined by the provisions of subdivision (6) of subsection (c) of section 4a-100 and such other relevant information as the Commissioner of Administrative Services prescribes. Any bid submitted without a copy of the prequalification certificate and an update bid statement shall be invalid and considered non-responsible.

1.3 Academic Schedule

1.3.1 It is important to the University, in order to maintain the integrity of its ongoing academic activities, that its rules and regulations and the requirements of the Contract Documents, regarding noise control, traffic control etc. and other matters which may affect its operations be strictly adhered to, and that its academic schedule be maintained. Therefore, all Bidders shall familiarize themselves with and comply with the academic schedule of the University, and its regulations regarding noise, traffic, etc. which are available from Architectural and Engineering Services. No noise generating work shall be allowed during exam periods where the noise will impact classroom functions. Examples of noise generating work include, but are not limited to, sawing, drilling, and hammering/jackhammering. The Contractor shall keep the

University Representative informed as to the location of its operations to enable necessary precautions or co-ordination to be implemented.

1.4 Non-Discrimination and Affirmative Action Provisions

1.4.1 Non-discrimination. References in this section to "Contract" shall mean the execution of AIA 101 or Purchase Order Contract; and references to "Contractor" shall mean the person or entity who will be solely responsible for execution of the work.

(a) The following subsections are set forth here as required by section 4a-60 of the Connecticut General Statutes:

(1) The Contractor agrees and warrants that in the performance of the Contract such Contractor will not discriminate or permit discrimination against any person or group of persons on the grounds of race, color, religious creed, age, marital status, national origin, ancestry, sex, mental retardation, mental disability or physical disability, including, but not limited to, blindness, unless it is shown by such Contractor that such disability prevents performance of the work involved, in any manner prohibited by the laws of the United States or of the state of Connecticut. The Contractor further agrees to take affirmative action to insure that applicants with job-related qualifications are employed and that employees are treated when employed without regard to their race, color, religious creed, age, marital status, national origin, ancestry, sex, mental retardation, mental disability or physical disability, including, but not limited to, blindness, unless it is shown by such Contractor that such disability prevents performance of the work involved; (2) the Contractor agrees, in all solicitations or advertisements for employees placed by or on behalf of the Contractor, to state that it is an "affirmative action-equal opportunity employer" in accordance with regulations adopted by the commission; (3) the Contractor agrees to provide each labor union or representative of workers with which such Contractor has a collective bargaining agreement or other contract or understanding and each vendor with which such Contractor has a contract or understanding, a notice to be provided by the commission advising the labor union or workers' representative of the Contractor's commitments under this section, and to post copies of the notice in conspicuous places available to employees and applicants for employment; (4) the Contractor agrees to comply with each provision of this section and sections 46a-68e and 46a-68f and with each regulation or relevant order issued by said commission pursuant to sections 46a-56, 46a-68e and 46a-68f; (5) the Contractor agrees to provide the Commission on Human Rights and Opportunities with such information requested by the commission, and permit access to pertinent books, records and accounts, concerning the employment practices and procedures of the Contractor as relate to the provisions of this section and section 46a-56.

(b) If the Contract is a public works contract, the Contractor agrees and warrants that he will make good faith efforts to employ minority business enterprises as subcontractors and suppliers of materials on such public works project.

(c) "Minority business enterprise" means any small contractor or supplier of materials fifty-one per cent or more of the capital stock, if any, or assets of which is owned by a person or persons: (1) Who are active in the daily affairs of the enterprise, (2) who have the power to direct the management and policies of the enterprise and (3) who are members of a minority, as such term is defined in subsection (a) of section 32-9n; and "good faith" means that degree of diligence which a reasonable person would exercise in the performance of legal duties and obligations. "Good faith efforts" shall include, but not be limited to, those reasonable initial efforts necessary to comply with statutory or regulatory requirements and additional or substituted efforts when it is determined that such initial efforts will not be sufficient to comply with such requirements.

(d) Determination of the Contractor's good faith efforts shall include but shall not be limited to the following factors: The Contractor's employment and subcontracting policies, patterns and practices; affirmative advertising, recruitment and training; technical assistance activities and such other reasonable activities or efforts as the commission may prescribe that are designed to ensure the participation of minority business enterprises in public works projects.

(e) The Contractor shall develop and maintain adequate documentation, in a manner prescribed by the commission, of its good faith efforts.

(f) The Contractor shall include the provisions of sections (a) and (b) above in every subcontract or purchase order entered into in order to fulfill any obligation of a contract with the state and such provisions shall be binding on a subcontractor, vendor or manufacturer unless exempted by regulations or orders of the commission. The Contractor shall take such action with respect to any such subcontract or purchase order as the commission may direct as a means of enforcing such provisions including sanctions for noncompliance in accordance with section 46a-56; provided, if such Contractor becomes involved in, or is threatened with, litigation with a subcontractor or vendor as a result of such direction by the commission, the Contractor may request the state of Connecticut to enter into any such litigation or negotiation prior thereto to protect the interests of the state and the state may so enter.

(g) The following subsections are set forth here as required by section 4a-60a of the Connecticut General Statutes:

(1) The Contractor agrees and warrants that in the performance of the Contract such Contractor will not discriminate or permit discrimination against any person or group of persons on the grounds of sexual orientation, in any manner prohibited by the laws of the United States or of the state of Connecticut, and that employees are treated when employed without regard to their sexual orientation; (2) the Contractor agrees to provide each labor union or representative of workers with which such Contractor has a collective bargaining agreement or other contract or understanding and each vendor with which such Contractor has a contract or understanding, a notice to be provided by the Commission on Human Rights and Opportunities advising the labor union or workers' representative of the Contractor's commitments under this section, and to post copies of the notice in conspicuous places available to employees and applicants for employment; (3) the Contractor agrees to comply with each provision of this section and with each regulation or relevant order issued by said commission pursuant to section 46a-56; and (4) the Contractor agrees to provide the Commission on Human Rights and Opportunities with such information requested by the commission, and permit access to pertinent books, records and accounts, concerning the employment practices and procedures of the Contractor which relate to the provisions of this section and section 46a-56.

(h) The Contractor shall include the provisions of section (g) above in every subcontract or purchase order entered into in order to fulfill any obligation of a contract with the state and such provisions shall be binding on a subcontractor, vendor or manufacturer unless exempted by regulations or orders of the commission. The Contractor shall take such action with respect to any such subcontract or purchase order as the commission may direct as a means of enforcing such provisions including sanctions for noncompliance in accordance with section 46a-56; provided, if such Contractor becomes involved in, or is threatened with, litigation with a subcontractor or vendor as a result of such direction by the commission, the Contractor may request the state of Connecticut to enter into any such litigation or negotiation prior thereto to protect the interests of the state and the state may so enter.

(i) For the purposes of this entire Non-Discrimination section, “Contract” or "contract" includes any extension or modification of the Contract or contract, “Contractor” or "contractor" includes any successors or assigns of the Contractor or contractor, "marital status" means being single, married as recognized by the state of Connecticut, widowed, separated or divorced, and "mental disability" means one or more mental disorders, as defined in the most recent edition of the American Psychiatric Association's "Diagnostic and Statistical Manual of Mental Disorders", or a record of or regarding a person as having one or more such disorders. For the purposes of this section, "Contract" does not include a contract where each contractor is (1) a political subdivision of the state, including, but not limited to, a municipality, (2) a quasi-public agency, as defined in Conn. Gen. Stat. Section 1-120, (3) any other state, including but not limited to any federally recognized Indian tribal governments, as defined in Conn. Gen. Stat. Section 1-267, (4) the federal government, (5) a foreign government, or (6) an agency of a subdivision, agency, state or government described in the immediately preceding enumerated items (1), (2), (3), (4) or (5).

1.5 Union Labor

1.5.1 Attention is called to the fact that there may be construction work now being carried on at the site at which this construction is contemplated being done by UNION LABOR. This fact must be kept in mind by all Bidders submitting proposals for this work.

1.6 Labor Market Area

1.6.1 All Bidders shall have read Sections 31-52 and 31-52a of the Connecticut General Statutes, as amended. These references relate to the preference of State citizens, the preference of residents of the labor market area in which the work under the Contract is to be done and the penalties for violations.

1.7 Wage Rates

1.7.1 If this project involves new construction of a building or other structure or improvement, and the total cost of all Work to be performed by Contractors and Subcontractors is $400,000.00 or more, or if the project involves remodeling, refurbishing, rehabilitation, alteration or repair of a building or other structure or improvement, and such total cost is $100,000.00 or more, then:

.1 The wages paid on an hourly basis to any mechanic, laborer or workman employed upon the work herein contracted to be done and the amount of payment or contribution paid or payable on behalf of each such employee to any employee welfare fund as defined in Subsection (h) of Section 31-53 of the Connecticut General Statutes, shall be at a rate equal to the rate customary or prevailing for the same work in the same trade or occupation in the town in which such project is being constructed. Any Contractor who is not obligated by agreement to make payment or contribution on behalf of such employees to any such employee welfare fund shall pay to each employee as part of his wages the amount of payment or contribution for his classification on each payday.

1.7.2 The State of Connecticut Labor Department Wage Rate Schedule, when required by the University, shall be provided with these documents or will be issued as part of the bid documents or by Bid Clarification/Addendum hereto and is deemed to reflect such customary

or prevailing wages for this project, and is hereby incorporated and made a part of the Contract Documents.

1.7.3 Each contractor who is awarded a contract on or after October 1, 2002 shall be subject to provisions of the Connecticut General Statutes, Section 31-53 as amended by Public Act 02-69, "An Act Concerning Annual Adjustments to Prevailing Wages".

1.7.4 Wage Rates will be posted each July 1st on the Department of Labor Website: www.ctdol.state.ct.us. Such prevailing wage adjustment will not be considered a matter for an annual contract amendment.

1.7.5 Wage rates shall be paid pursuant to Section 31-53 and 31-54 of the Connecticut General Statutes, and any regulations issued hereunder.

1.7.6 **Sec. 31-53b. Construction safety and health course. New miner training program. Proof of completion required for mechanics, laborers and workers on public works projects. Enforcement. Regulations. Exceptions.** (a) Each contract for a public works project entered into on or after July 1, 2009, by the state or any of its agents, or by any political subdivision of the state or any of its agents, described in subsection (g) of section 31-53, shall contain a provision requiring that each contractor furnish proof with the weekly certified payroll form for the first week each employee begins work on such project that any person performing the work of a mechanic, laborer or worker pursuant to the classifications of labor under section 31-53 on such public works project, pursuant to such contract, has completed a course of at least ten hours in duration in construction safety and health approved by the federal Occupational Safety and Health Administration or, has completed a new miner training program approved by the Federal Mine Safety and Health Administration in accordance with 30 CFR 48 or, in the case of telecommunications employees, has completed at least ten hours of training in accordance with 29 CFR 1910.268. (b) Any person required to complete a course or program under subsection (a) of this section who has not completed the course or program shall be subject to removal from the worksite if the person does not provide documentation of having completed such course or program by the fifteenth day after the date the person is found to be in noncompliance.

ARTICLE 2 BIDDERS' REPRESENTATIONS

2.1 The amount of each Bid shall be deemed to include the entire cost and expense of every item of labor, material and overhead necessary to complete the work bid upon, as specified, in full detail ready for use. The risk of all such costs and expenses shall be deemed assumed by the successful Bidder. The University shall assign a University Representative to work with the successful Contractor as a liaison.

2.2 In performing its obligations under this Contract, the Contractor agrees to comply with all applicable states, laws, ordinances, regulations, codes, rules or orders of, or issued by, any governmental body having jurisdiction over the work, location of the work or contract.

ARTICLE 3 BIDDING DOCUMENTS

3.1 Bid Clarifications, Addenda and Interpretations

3.1.1 No interpretations of the meaning of the Drawings, specifications or other Contract Documents will be made orally to any Bidder. Every request for such interpretation must be made in writing to the University Office of Capital Project & Contract Administration, and to be given consideration shall be received at the specified date outlined within the invitation to bid and/or adjusted by a bid clarification/addenda.

3.1.2 Any and all such interpretations and any supplemental instructions will be in the form of written bid clarification/addenda which, if issued, will be posted on the University's Capital Projects and Contract Administration's Department website; www.cpca.uconn.edu. for all prospective Bidders to access or for those without access to a computer you can obtain them through Joseph Merritt, no later than five (5) days prior to the date fixed for the opening of Bids. Failure of any Bidder to receive any such addendum or interpretation shall not release any Bidder from any obligations under his Bid as submitted, provided notice has been sent to the address furnished by such prospective Bidder for the transmittal of notices, addenda and interpretations. It shall be the Bidder's responsibility to make inquiry as to, and to obtain, the Addenda issued, if any.

3.1.3 The number of days shown in 3.1.1 and 3.1.2 may differ from the actual dates given in an Agenda for a Pre-Bid or Pre-Proposal Conference, if so, the number of days listed are, hereby, superseded by the Agenda dates, unless the Bid or Proposal is extended by Addendum, in which case the number of days will again apply unless stated differently in the Addendum.

3.1.4 Bidders shall promptly notify the University of any ambiguity, inconsistency or error which they may discover upon examination of these Contract Documents.

ARTICLE 4 BIDDING PROCEDURES

4.1 Requests for Information

4.1.1 Enclosed with this Invitation to Submit Proposals Manual is a Request for Information Form (RFI). All questions/clarifications must be submitted in writing on this form and before the prescribed RFI Deadline. No verbal questions will be answered. All answers to RFI's will be issued in a Bid Clarification/Addenda. Form is at the end of this document.

4.2 Form of Proposal

4.2.1 Enclosed with this Invitation to Submit Proposals Manual is a Form of Proposal. Bids shall be submitted on a copy of this form. Additional instructions to bidders including information on submission of bids and award and Contract appear on this form. All documents required by these Bid Documents must be returned with your Bid.

4.3 Bids and Rejection of Bids

4.3.1 General Bids shall be for the complete work as specified and shall include the names of any Subcontractors for the classes of work specified in the Form of Proposal, and for each other class of work for which the University has required a separate section and the dollar amounts of their subcontracts, and the General Contractor shall be selected on the basis of such general Bids. It shall be presumed that the general Bidder intends to perform with its own employees all work in such four classes and such other classes, for which no Subcontractor is

named. The general Bidder's qualifications for performing such work shall be subject to review by the University pursuant to the Bid and the Contract Documents.

4.3.2 Bids shall be submitted only on the forms furnished for the specific project, which shall include a completed Form of Proposal containing all information required on the Proposal form, executed with an original signature by a duly authorized officer or representative of the Bidder, and, in the case of a Joint Venture, by duly authorized representatives of each Joint Venture. In no event will Bids or changes in Bids made by telephone, email or fax be considered. Any Form of Proposal omitting or adding items, altering the form, containing conditional or alternative Bids, or without the original signature of the Bidder or its authorized representative, may be rejected.

4.3.3 Any Bids received after the scheduled closing time for the receipt of Bids will be returned to the Bidders unopened.

4.3.4 Any Bid once deposited with the University of Connecticut may only be withdrawn by letter of request, signed by the depositing Bidder and presented to the Office of Capital Project and Contract Administration, prior to the time of opening of any Bid for the project designated or identified project.

4.4 Bid Security

4.4.1 Each Bid must be accompanied by a certified check payable to the order of the University of Connecticut, or the Bid may be accompanied by a Bid Bond in the form required by the University, having as surety thereto such surety company or companies acceptable to the University and as are authorized to do business in this State, for an amount not less than 10 per cent of the Bid. All checks submitted by unsuccessful Bidders shall be returned to them after the Contract has been awarded. Bid Security is not required for projects under $50,000.00.

4.4.2 Failure of the successful Bidder to file the required Performance and Labor & Material bonds shall be just cause for the amount of the security deposited with the Bid to be forfeited, any part of the whole of which may be used to make up the difference between the Bid of the defaulting Bidder and the Bid of the next lowest responsible qualified Bidder to whom the work is finally awarded. Failure to execute a contract after award as specified and Bid shall also result in the forfeiture of such Bid Bonds or Certified Check.

4.5 Subcontractors

4.5.1 The Contractor shall not contract with a person or entity who appears on the State of Connecticut Debarment List, the Federal Davis Bacon Act Debarment List, both of which are available through: **http://ctdol.state.ct.us** or the Federal List of Excluded Parties Listing System available through: **http://epls.arnet.gov**

4.5.2 The Bidder shall furnish, with his submitted Bid, as is set forth in the Proposal Form, in the space provided for such purpose, the names and prices of responsible and qualified Subcontractors who are actually to perform the following categories of work under the Base Bid, if their prices exceed $25,000.00:

.1 Masonry
.2 Electrical
.3 Mechanical other than HVAC
.4 HVAC
.5 Any other class of work identified in the Proposal Form for which a blank space has been provided.

4.5.3 The Bidder further agrees that each of the Subcontractors listed on the Proposal Form will be used for the work indicated at the amount stated unless a substitution is permitted by the University.

4.5.4 The Bidder further agrees and warrants that he has made good faith efforts to employ minority business enterprises as Subcontractors and suppliers of materials under such contract and shall provide the Commission on Human Rights and Opportunities with such information as is requested by the Commission concerning his employment practices and procedures as they relate to the provisions of the general statutes governing contract requirements.

4.5.5 Pursuant to Connecticut General Statutes Section 49-41a, for every contract with the University for the construction, alteration or repair of any building or work, (1) the Contractor, within 30 days after payment to the Contractor by the University, shall be required to pay any amounts due any Subcontractor, whether for labor performed or materials furnished, when the labor or materials have been included in a requisition submitted by the Contractor and paid by the University; (2) the Contractor shall include in each of its subcontracts a provision requiring each Subcontractor to pay any amounts due any of its Subcontractors, whether for labor performed or materials furnished, within 30 days after each Subcontractor receives a payment from the Contractor which encompasses labor or materials furnished by such Subcontractor.

4.5.6 Within five days after being notified of the award of a general Contract by the University, or, in the case of an approval of a substitute Subcontractor by the University, within five days after being notified of such approval, the general Bidder shall present to each listed or substitute Subcontractor:

.1 A subcontract in the form set forth in Section 4b-96 of the Connecticut General Statutes and must be executed with all of your named subcontractors in your form of proposal.

.2 A notice of the time limit under this section for executing a subcontract. If a listed Subcontractor fails within five days, Saturdays, Sundays and legal holidays excluded, after presentation of a subcontract by the general Bidder selected as a General Contractor, to perform his agreement to execute a subcontract in the form hereinafter set forth with such general Bidder, contingent upon the execution of the general Contract, the General Contractor shall select another Subcontractor, with the approval of the University. When seeking approval for a substitute Subcontractor, the general Bidder shall provide the University with all documents showing (a) the general Bidder's proper presentation of a subcontract to the listed Subcontractor and, (b) communications to or from such Subcontractor after such presentation. The University

shall adjust the Contract Price to reflect the difference between the amount of the price of the new Subcontractor and the amount of the price of the listed Subcontractor, if the new Subcontractor's price is lower and may adjust such Contract Price, if the new Subcontractor's price is higher. The general Bidder shall, with respect to each listed Subcontractor or approved substitute Subcontractor, file with the University a copy of each executed subcontract within ten days, Saturdays, Sundays and legal holidays excluded, of presentation of a subcontract to such Subcontractor.

.3 In the event of any conflict or inconsistency between the University of Connecticut's Subcontract form and the Contractor's standard Subcontract form, the provisions of the University of Connecticut's Subcontract form shall prevail. Any standard Subcontract form used will be attached as a supplement to the University of Connecticut's Subcontract form.

4.6 LIQUIDATED DAMAGES

4.6.1 Liquidated Damages of **Five Hundred and 00/100 Dollars ($500.00)** per calendar day shall be assessed if the Contractor fails to achieve Substantial Completion, or causes delay to the Substantial Completion of any portion of the Work within the Contract Time.

4.7 **COMMISSION ON HUMAN RIGHTS AND OPPORTUNITIES CONTRACT COMPLIANCE REGULATIONS:**

The contract to be awarded is subject to contract compliance requirements mandated by Sections 4a-60 and 4a-60a of the Connecticut General Statutes; and, when the awarding agency is the State, Sections 46a-71(d) and-81i(d) of the Connecticut General Statutes. There are Contract Compliance Regulations codified at Section-68j-21 through 43 of the Regulations of Connecticut State Agencies, which establish a procedure for awarding all contracts covered by Sections 4a-60 and 46a-71(d) of the Connecticut General Statutes. According to Section 46a-68j-30(9) of the Contract Compliance Regulations, every agency awarding a contract subject to the contract compliance requirements has an obligation to "aggressively solicit the participation of legitimate minority business enterprises as bidders, contractors, subcontractors and suppliers of materials." Minority business enterprise" is defined in Section 4a-60 of the Connecticut General Statutes as a business wherein fifty-one percent or more of the capital stock, or assets belong to a person or persons: "(1) Who are active in daily affairs of the enterprise; (2) who have the power to direct the management and policies of the enterprise; and (3) who are members of a minority, as such term is defined in subsection (a) of Section 32-9n." "Minority" groups are defined in Section 32-9n of the Connecticut General Statutes as "(1) Black Americans . . .(2) Hispanic Americans . . . (3) persons who have origins in the Iberian Peninsula . . . (4)Women . . . (5) Asian Pacific Americans and Pacific Islanders; (6) American Indians . . ." An individual with a disability is also a minority business enterprise as provided by Section 4a-60g of the Connecticut General Statutes. The above definitions apply to the contract compliance requirements by virtue of Section 46a-68j-21(11) of the Contract Compliance Regulations. The awarding agency will consider the following factors when reviewing the bidder's qualifications under the contract compliance requirements:(a) the bidder's success in implementing an affirmative action plan;(b) the bidder's success in developing an apprenticeship program complying with Sections 46a-68-1 to 46a-68-17 of the Administrative Regulations of Connecticut State Agencies, inclusive;(c) the bidder's promise to develop and implement a successful affirmative action plan;(d) the bidder's submission of

employment statistics contained in the "Employment Information Form", indicating that the composition of its workforce is at or near parity when compared to the racial and sexual composition of the workforce in the relevant labor market area; and(e) the bidder's promise to set aside a portion of the contract for legitimate minority business enterprises. See Section 46a-68j-30(10)(E) of the Contract Compliance Regulations.

4.7.1 The following BIDDER CONTRACT COMPLIANCE MONITORING REPORT must be completed in full, signed, and submitted with the bid for this contract. The contract awarding agency and the Commission on Human Rights and Opportunities will use the information contained thereon to determine the bidders compliance to Sections 4a-60 and 4a-60a CONN. GEN. STAT., and Sections 46a-68j-23 of the Regulations of Connecticut State Agencies regarding equal employment opportunity, and the bidders __good faith efforts to include minority business enterprises as subcontractors and suppliers for the work of the contract.

1) Definition of Small Contractor:
Section 4a-60g CONN. GEN. STAT. defines a small contractor as a company that has been doing business under the same management and control and has maintained its principal place of business in Connecticut for a one year period immediately prior to its application for certification under this section, had gross revenues not exceeding ten million dollars in the most recently completed fiscal year, and at least fifty-one percent of the ownership of which is held by a person or persons who are active in the daily affairs of the company, and have the power to direct the management and policies of the company, except that a nonprofit corporation shall be construed to be a small contractor if such nonprofit corporation meets the requirements of subparagraphs (A) and (B) of subdivision 4a-60g CONN. GEN. STAT.

2) Description of Job Categories (as used in Part IV Bidder Employment Information)
MANAGEMENT: Managers plan, organize, direct, and control the major functions of an organization through subordinates who are at the managerial or supervisory level. They make policy decisions and set objectives for the company or departments. They are not usually directly involved in production or providing services. Examples include top executives, public relations managers, managers of operations specialties (such as financial, human resources, or purchasing managers), and construction and engineering managers.
BUSINESS AND FINANCIAL OPERATIONS: These occupations include managers and professionals who work with the financial aspects of the business. These occupations include accountants and auditors, purchasing agents, management analysts, labor relations specialists, and budget, credit, and financial analysts.
COMPUTER SPECIALISTS: Professionals responsible for the computer operations within a company are grouped in this category. Examples of job titles in this category include computer programmers, software engineers, database administrators, computer scientists, systems analysts, and computer support specialists
ARCHITECTURE AND ENGINEERING: Occupations related to architecture, surveying, engineering, and drafting are included in this category. Some of the job titles in this category include electrical and electronic engineers, surveyors, architects, drafters, mechanical engineers, materials engineers, mapping technicians, and civil engineers.
OFFICE AND ADMINISTRATIVE SUPPORT: All clerical-type work is included in this category. These jobs involve the preparing, transcribing, and preserving of written communications and records; collecting accounts; gathering and distributing information; operating office machines and electronic data processing equipment; and distributing mail. Job titles listed in this

category include telephone operators, payroll clerks, bill and account collectors, customer service representatives, files clerks, dispatchers, shipping clerks, secretaries and administrative assistants, computer operators, mail clerks, and stock clerks.

BUILDING AND GROUNDS CLEANING AND MAINTENANCE:
This category includes occupations involving landscaping, housekeeping, and janitorial services. Job titles found in this category include supervisors of landscaping or housekeeping, janitors, maids, grounds maintenance workers, and pest control workers.

CONSTRUCTION AND EXTRACTION: This category includes construction trades and related occupations. Job titles found in this category include boilermakers, masons (all types), carpenters, construction laborers, electricians, plumbers (and related trades), roofers, sheet metal workers, elevator installers, hazardous materials removal workers, paperhangers, and painters. Paving, surfacing, and tamping equipment operators; drywall and ceiling tile installers; and carpet, floor and tile installers and finishers are also included in this category. First line supervisors, foremen, and helpers in these trades are also grouped in this category..

INSTALLATION, MAINTENANCE AND REPAIR: Occupations involving the installation, maintenance, and repair of equipment are included in this group. Examples of job titles found here are heating, ac, and refrigeration mechanics and installers; telecommunication line installers and repairers; heavy vehicle and mobile equipment service technicians and mechanics; small engine mechanics; security and fire alarm systems installers; electric/electronic repair, industrial, utility and transportation equipment; millwrights; riggers; and manufactured building and mobile home installers. First line supervisors, foremen, and helpers for these jobs are also included in the category.

MATERIAL MOVING WORKERS: The job titles included in this group are Crane and tower operators; dredge, excavating, and lading machine operators; hoist and winch operators; industrial truck and tractor operators; cleaners of vehicles and equipment; laborers and freight, stock, and material movers, hand; machine feeders and offbearers; packers and packagers, hand; pumping station operators; refuse and recyclable material collectors; and miscellaneous material moving workers.

3) Definition of Racial and Ethnic Terms (as used in Part IV Bidder Employment Information):
White (not of Hispanic Origin)- All persons having origins in any of the original peoples of Europe, North Africa, or the Middle East.
Black (not of Hispanic Origin)- All persons having origins in any of the Black racial groups of Africa.
Hispanic- All persons of Mexican, Puerto Rican, Cuban, Central or South American, or other Spanish culture or origin, regardless of race.
Asian or Pacific Islander- All persons having origins in any of the original peoples of the Far East, Southeast Asia, the Indian subcontinent, or the Pacific Islands. This area includes China, India, Japan, Korea, the Philippine Islands, and Samoa.
American Indian or Alaskan Native- All persons having origins in any of the original peoples of North America, and who maintain cultural identification through tribal affiliation or community recognition

ARTICLE 5 CONSIDERATION OF BIDS

5.1 Every general bid which is conditional or obscure, or which contains any addition not called for shall be invalid; and the University shall reject every such general Bid. The University shall be authorized to waive minor irregularities, which it considers in its best interest, provided the reasons for any such waiver are stated in writing by the University and made a part of the contract file. No such general Bid

shall be rejected because of the failure to submit prices for, or information relating to, any item or items for which no specific space is provided in the general Proposal Form furnished by the University, but this sentence shall not be applicable to any failure to furnish prices or information required by Articles 4.2.1 and 4.4.1 above to be furnished in the form provided by the University. The University also reserves the right to reject any and all bids and again advertise for bids, or to otherwise proceed as permitted under Connecticut General Statues 10a-109a through 10a-109y.

5.2 General Bids shall be publicly opened and read by the University forthwith. The University may require in the Proposal Form that the General Contractor agree to perform a stated, minimum percentage of work with his own forces. The University may also require the General Contractor to set aside a portion of the contract for Subcontractors who are eligible for set aside contracts. The University shall not permit substitution of a Subcontractor for one named in accordance with the provisions of these Instructions or substitution of a Subcontractor for any designated subtrade work bid to be performed by the General Contractor's own forces, except for good cause. The term "good cause" includes but is not limited to a Subcontractor's or, where appropriate, a General Contractor's: (1) Death or physical disability, if the listed Subcontractor is an individual; (2) dissolution, if a corporation or partnership; (3) bankruptcy; (4) inability to furnish any performance and payment bond shown on the Proposal Form; (5) inability to obtain, or loss of, a license necessary for the performance of a particular category of work; (6) failure or inability to comply with a requirement of law applicable to Contractors, Subcontractors, on construction, alteration, or repair projects; (7) failure to perform his agreement to execute a subcontract under Connecticut General Statutes Section 4b-96.

5.3 The general Bid Price shall be the price set forth in the space provided on the general Proposal Form. No general Bid shall be rejected (1) because of error in setting forth the name of a Subcontractor as long as the Subcontractors designated are clearly identifiable, or (2) because the Drawings and specifications do not accompany the Bid or are not submitted with the Bid. **FAILURE TO CORRECTLY STATE A SUBCONTRACTOR'S PRICE MAY BE CAUSE FOR REJECTION OF THE GENERAL BIDDER'S BID.**

5.4 Any General Contractor who violates any provision of Connecticut General Statutes Section 4b-95 may be disqualified from bidding on other contracts that are subject to the provisions of Chapter 60 of the General Statutes for a period not to exceed twenty-four months, commencing from the date on which the violation is discovered, for each violation.

5.5 The University reserves the right to accept or reject any or all Bids within 90 calendar days of the Bid opening, and the Bidder agrees that it may not modify, withdraw, or cancel its Bid and that its Bid Price will be firm for this 90 day period. This 90 day period may be extended by mutual agreement between the University and the Bidder.

5.6 The project will be awarded to the responsible qualified Bidder submitting the lowest Bid in compliance with the Bid requirements and within the budget, subject to the provisions of Connecticut General Statues 10a-109a through 10a-109y.

5.7 The University reserves the right to elect to implement some, all or none of the Alternates and/or Options set forth in the Proposal forms, as may be in the best interest of the University. The low Bid shall be determined by taking the Base Price set forth in the Proposal form as selected by the University, plus the Alternates and/or Options selected by the University.

5.8 The Bidder agrees that if selected as General Contractor, he shall, within ten (10) days, Saturdays, Sundays and legal holidays excluded, after presentation thereof by the University, execute a contract in accordance with the terms of the general Bid.

ARTICLE 6 POST- BID INFORMATION

6.1 Affirmative Action

6.1.1 Pursuant to Connecticut General Statutes Section 46a-68d, if this project is estimated to cost more than $50,000.00 then: In the event that the Bidder's Bid is accepted, after acceptance, but before a contract is awarded, the successful Bidder shall file and have approved by the Commission on Human Rights and Opportunities an Affirmative Action Plan. The Commission may provide for conditional acceptance of an Affirmative Action Plan provided written assurances are given by the Contractor that it will amend its plan to conform to affirmative action requirements. The University shall withhold 2% of the total Contract Price per month from any payment made to such Contractor until such time as the Contractor has developed an Affirmative Action Plan, and received the approval of the Commission. Notwithstanding the provisions of Connecticut General Statutes Section 46a-68d, a Contractor subject to the provisions of that Section may file a plan in advance of or at the same time as its Bid.

6.1.2 The University shall not enter into a contract with any Bidder or prospective Contractor unless the Bidder or prospective Contractor has satisfactorily complied with the provisions of Sections 4a-60, 32-9e, 46a-56 and 46a-68c to 46a-68f, inclusive of the Connecticut General Statutes, or submits a program for compliance acceptable to the Commission on Human Rights and Opportunities.

6.1.3 The Contractor shall designate an "Equal Opportunity Contract Compliance Officer" for the project. The Contractor designee, in addition to any other duties assigned by the Contractor, shall have the following responsibilities for the implementation of the Contractor Affirmative Action Plan (AAP) that is required for the project pursuant to Connecticut General Statutes Section's 46a-68c and 46a-68d.

.1 Maintain a project EEO file to include all records, correspondence and other documentation related to the project AAP.

.2 Communicate to and inform all project Contractors and Subcontractors, regardless of tier, and labor referral organizations (if applicable) about project equal opportunity and AAP expectations and performance requirements.

.3 Compile all on-site Contractor MONTHLY EMPLOYMENT UTILIZATION REPORTS (form CHRO cc-257) and submit a cumulative report for the project each month to report on contractor compliance to project AAP hiring goals. The cumulative report shall be submitted to the contract awarding agency and to the Commission on Human Rights and Opportunities by the 15th day following the end of each calendar month during the pendency of the on-site construction work of the project.

.4 Attach a copy of your transmittal letter to CHRO as a document to be submitted with your invoice.

.5 Compile and submit a QUARTERLY SMALL CONTRACTOR AND MINORITY BUSINESS ENTERPRISE PAYMENT STATUS REPORT (form CHRO cc-258) to report on the participation of such Contractors identified to participate on the project. The report shall be submitted to the contract awarding agency and to the Commission on Human Rights and Opportunities by the 15th day following the end of each calendar quarter during the pendency of the on-site construction work of the project.

.6 Attach a copy of your transmittal letter to CHRO as a document to be submitted with your invoice.

.7 Participate in project job meetings to inform project Contractors about project equal opportunity and AAP performance.

.8 Coordinate "External Communication" section (employment outreach) of contractor AAP for all employment opportunities resultant during the course of the project from all project Contractors and maintain documentation of all contacts and responses.

6.2 Tax Identification

6.2.1 The Contractor shall furnish to the Owner, at the time of execution of the Contract, the following information

.1 The identity and addresses of all subcontractors performing work on the project.
.2 The Connecticut tax registration numbers of the Contractor and all subcontractors.
.3 The Federal Social Security account numbers, or Federal Employer Identification numbers, or both, if applicable, for the Contractor and all subcontractors.

6.2.2 The aforementioned information shall be continuously updated by the Contractor to reflect any additions or changes to the previously identified subcontractors. Any final additions or changes to this information shall be submitted to the Owner with the Contractor's application for final payment.

6.3 Labor Rates

6.3.1 The Contractor shall provide labor rates for trade labor work self-performed by the Contractor utilizing the labor rate form template provided by the Owner and located at the following weblink:
http://paes.uconn.edu/contractors-working-at-uconn/

ARTICLE 7 PERFORMANCE AND PAYMENT BONDS AND CERTIFICATE OF COMPLIANCE.

7.1 Performance Bond

7.1.1 Prior to execution of the Contract, the successful Bidder shall substitute for the check or Bid Bond accompanying his Bid, an executed University of Connecticut Performance Bond, in the amount of 100 per cent of the Contract Price, conditioned upon the faithful performance of the Contract. See Form of Proposal for the appropriate form to be executed.

7.2 Labor and Material Payment Bond

7.2.1 Prior to execution of the Contract, the Bidder shall submit a University of Connecticut Labor and Material Payment Bond in the sum of not less than 100 per cent of the Contract Price, containing the condition that the Contractor will promptly pay for all material furnished and labor, supplied or performed in the prosecution of the work whether or not said material or labor is involved and/or becomes a component part of the structure or structures to be erected. Such additional bond shall be held for the use of each party who, as Subcontractor or otherwise, shall have furnished material or supplies or shall have performed labor in the prosecution of the work as herein provided and who has not been paid therefore. Such additional bond shall provide specifically that any person may bring suit thereon in the name of the person suing, prosecute the same to the final judgment and have execution thereon for such sum or sums as may be justly due. The State shall not be liable to furnish counsel nor for the payment of any costs or expenses of any such suit. This bond is to be furnished pursuant to Section 49-41 of the General Statutes of Connecticut, and claims thereon shall be subject to the provisions of Connecticut General Statutes Section 49-42. Such forms will be provided with the Letter of Intent to award to be executed.

7.3 Nonresident Contractor Certificate of Compliance

7.3.1 Prior to execution of the Contract, the Bidder shall submit proof that ensures they and all subcontractors being contracted to perform work under the awarded bid; are State of Connecticut resident contractors. Such proof shall be in a form on the awarding Contractor's letter head signed by the owner or principle of the company having authority to ensure that all agreements entered into under this contract are in-state resident contractors. Should the awarding Contractor and/or subcontractors who will perform work under this contract, are nonresident of the State of Connecticut, the awarding Contractor must provide a Certificate of Compliance from the Department of Revenue Services (DRS) for those nonresident firms who will be under contract. This Certificate of Compliance is pursuant to Statue 12-430 as amended by 2005 Connecticut Public Acts 260, 6; Connecticut Agencies Regulations 12-430 (7)-1.

7.4 General Provisions Regarding Bonds

7.4.1 The aforementioned Performance and Payment bonds shall be provided in the forms required by the University, samples of which are appended hereto. If the Contractor is a Joint Venture, all such bonds shall name all joint ventures as principals. The Contractor shall require the attorney-in-fact who executes the required bonds on behalf of the surety to affix thereto a certified and current copy of the power of attorney. The above bonds shall be required for awards for which the total estimated cost of labor and materials under the Contract is at least $100,000.00. The above bonds shall be acceptable to the University and, as a minimum, issued through a bonding company licensed to transact such business in the State of Connecticut and named on the current list of "Surety Companies Acceptable on Federal Bonds" as published in the "Treasury Department Circular 570."

ARTICLE 8 AFFIDAVITS/ETHICS AFFIRMATIONS

8.1 Affidavits/Ethics Affirmations to be completed in accordance with the instructions provided on the OPM website for each Affidavits/Ethics Affirmations.

Form 5. Consulting Agreement Affidavit (for contract values >$50,000)

Form 6. Affirmation of Receipt of State Ethics Laws Summary (for contract values >$500,000)

8.2 With regard to a State contract as defined in P.A. 07-1 having a value in a calendar year of $50,000 or more or a combination of series of such agreements or contracts having a value of $100,000 or more, the authorized signatory to this submission in response to the State's solicitation expressly state contractors of state campaign contribution and solicitation prohibitions, and will inform its principals of the contents of the notice. See attached **SEEC Form 11.**

Obtain OPM has posted the approved Forms on the OPM Web site - http://www.opm.state.ct.us/secr/forms/ContractAffidavitRequirements.htm

ARTICLE 9 CONTRACT

9.1 A draft of the contract has been provided with the bid documents. The University reserves the right to modify the contract or wave any informality as it deems to be in the best interest of the University. By submitting a bid the Contractor accepts the contract and any modifications that the University deems necessary to it without exception. Exceptions to the contract submitted by the Contractor at any time will not be considered.

REQUEST FOR INFORMATION FORM

TO: **Cesar Alonzo**
cesar.alonzo@uconn.edu

FROM: _____
(Name of Bidding Firm)

Contact Name: _____

RFI Deadline: 2/15/2019 by 2:00PM

Phone # :_____ **Fax #** :_____

Specification Section: _____

Drawing No. / Drawing Date: _____

QUESTION (Please be specific): _____

_____

_____

_____

_____

_____

_____

_____

_____

_____

_____

Signature: _____ **Date:** _____

NOTE: All questions must be submitted in writing before the prescribed RFI Deadline. No verbal questions will be answered. All questions must be submitted in writing on this RFI Form. All answers to RFI's will be issued in a Bidder's Clarification.

STATE OF CONNECTICUT
STATE ELECTIONS ENFORCEMENT COMMISSION
20 Trinity Street Hartford, Connecticut 06106—1628

SEEC FORM 11

NOTICE TO EXECUTIVE BRANCH STATE CONTRACTORS AND PROSPECTIVE STATE CONTRACTORS OF CAMPAIGN CONTRIBUTION AND SOLICITATION BAN

This notice is provided under the authority of Connecticut General Statutes 9-612(g)(2), as amended by P.A. 07-1, and is for the purpose of informing state contractors and prospective state contractors of the following law (italicized words are defined below):

Campaign Contribution and Solicitation Ban

No *state contractor, prospective state contractor, principal of a state contractor or principal of a prospective state contractor*, with regard to a *state contract* or *state contract solicitation* with or from a state agency in the executive branch or a quasi-public agency or a holder, or principal of a holder of a valid prequalification certificate, shall make a contribution to, or *solicit* contributions on behalf of (i) an exploratory committee or candidate committee established by a candidate for nomination or election to the office of Governor, Lieutenant Governor, Attorney General, State Comptroller, Secretary of the State or State Treasurer, (ii) a political committee authorized to make contributions or expenditures to or for the benefit of such candidates, or (iii) a party committee;

In addition, no holder or principal of a holder of a valid prequalification certificate, shall make a contribution to, or solicit contributions on behalf of (i) an exploratory committee or candidate committee established by a candidate for nomination or election to the office of State senator or State representative, (ii) a political committee authorized to make contributions or expenditures to or for the benefit of such candidates, or (iii) a party committee.

Duty to Inform

State contractors and prospective state contractors are required to inform their principals of the above prohibitions, as applicable, and the possible penalties and other consequences of any violation thereof.

Penalties for Violations

Contributions or solicitations of contributions made in violation of the above prohibitions may result in the following civil and criminal penalties:
Civil penalties--$2000 or twice the amount of the prohibited contribution, whichever is greater, against a principal or a contractor. Any state contractor or prospective state contractor which fails to make reasonable efforts to comply with the provisions requiring notice to its principals of these prohibitions and the possible consequences of their violations may also be subject to civil penalties of $2000 or twice the amount of the prohibited contributions made by their principals.
Criminal penalties—Any knowing and willful violation of the prohibition is a Class D felony, which may subject the violator to imprisonment of not more than 5 years, or $5000 in fines, or both.

Contract Consequences

Contributions made or solicited in violation of the above prohibitions may result, in the case of a state contractor, in the contract being voided.

Contributions made or solicited in violation of the above prohibitions, in the case of a prospective state contractor, shall result in the contract described in the state contract solicitation not being awarded to the prospective state contractor, unless the State Elections Enforcement Commission determines that mitigating circumstances exist concerning such violation.

The State will not award any other state contract to anyone found in violation of the above prohibitions for a period of one year after the election for which such contribution is made or solicited, unless the State Elections Enforcement Commission determines that mitigating circumstances exist concerning such violation.

Additional information and the entire text of P.A 07-1 may be found on the website of the State Elections Enforcement Commission, www.ct.gov/seec. Click on the link to "State Contractor Contribution Ban."

Definitions:

"State contractor" means a person, business entity or nonprofit organization that enters into a state contract. Such person, business entity or nonprofit organization shall be deemed to be a state contractor until December thirty-first of the year in which such contract terminates. "State contractor" does not include a municipality or any other political subdivision of the state, including any entities or associations duly created by the municipality or political subdivision exclusively amongst themselves to further any purpose authorized by statute or charter, or an employee in the executive or legislative branch of state government or a quasi-public agency, whether in the classified or unclassified service and full or part-time, and only in such person's capacity as a state or quasi-public agency employee.

"Prospective state contractor" means a person, business entity or nonprofit organization that (i) submits a response to a state contract solicitation by the state, a state agency or a quasi-public agency, or a proposal in response to a request for proposals by the state, a state agency or a quasi-public agency, until the contract has been entered into, or (ii) holds a valid prequalification certificate issued by the Commissioner of Administrative Services under section 4a-100. "Prospective state contractor" does not include a municipality or any other political subdivision of the state, including any entities or associations duly created by the municipality or political subdivision exclusively amongst themselves to further any purpose authorized by statute or charter, or an employee in the executive or legislative branch of state government or a quasi-public agency, whether in the classified or unclassified service and full or part-time, and only in such person's capacity as a state or quasi-public agency employee.

"Principal of a state contractor or prospective state contractor" means (i) any individual who is a member of the board of directors of, or has an ownership interest of five per cent or more in, a state contractor or prospective state contractor, which is a business entity, except for an individual who is a member of the board of directors of a nonprofit organization**,** (ii) an individual who is employed by a state contractor or prospective state contractor, which is a business entity, as president, treasurer or executive vice president, (iii) an individual who is the chief executive officer of a state contractor or prospective state contractor, which is not a business entity, or if a state contractor or prospective state contractor has no such officer, then the officer who duly possesses comparable powers and duties, (iv) an officer or an employee of any state contractor or prospective state contractor who has *managerial or discretionary responsibilities with respect to a state contract,* (v) the spouse or a *dependent child* who is eighteen years of age or older of an individual described in this subparagraph, or (vi) a political committee established or controlled by an individual described in this subparagraph or the business entity or nonprofit organization that is the state contractor or prospective state contractor.

"State contract" means an agreement or contract with the state or any state agency or any quasi-public agency, let through a procurement process or otherwise, having a value of fifty thousand dollars or more, or a combination or series of such agreements or contracts having a value of one hundred thousand dollars or more in a calendar year, for (i) the rendition of services, (ii) the furnishing of any goods, material, supplies, equipment or any items of any kind, (iii) the construction, alteration or repair of any public building or public work, (iv) the acquisition, sale or lease of any land or building, (v) a licensing arrangement, or (vi) a grant, loan or loan guarantee. "State contract" does not include any agreement or contract with the state, any state agency or any quasi-public agency that is exclusively federally funded, an education loan or a loan to an individual for other than commercial purposes.

"State contract solicitation" means a request by a state agency or quasi-public agency, in whatever form issued, including, but not limited to, an invitation to bid, request for proposals, request for information or request for quotes, inviting bids, quotes or other types of submittals, through a competitive procurement process or another process authorized by law waiving competitive procurement.

"Managerial or discretionary responsibilities with respect to a state contract" means having direct, extensive and substantive responsibilities with respect to the negotiation of the state contract and not peripheral, clerical or ministerial responsibilities.

"Dependent child" means a child residing in an individual's household who may legally be claimed as a dependent on the federal income tax of such individual.

"Solicit" means (A) requesting that a contribution be made, (B) participating in any fund-raising activities for a candidate committee, exploratory committee, political committee or party committee, including, but not limited to, forwarding tickets to potential contributors, receiving contributions for transmission to any such committee or bundling contributions, (C) serving as chairperson, treasurer or deputy treasurer of any such committee, or (D) establishing a political committee for the sole purpose of soliciting or receiving contributions for any committee. Solicit does not include: (i) making a contribution that is otherwise permitted by Chapter 155 of the Connecticut General Statutes; (ii) informing any person of a position taken by a candidate for public office or a public official, (iii) notifying the person of any activities of, or contact information for, any candidate for public office; or (iv) serving as a member in any party committee or as an officer of such committee that is not otherwise prohibited in this section.

END OF INSTRUCTION TO BIDDERS

UCONN

PROCUREMENT SERVICES

CAPITAL PROJECTS AND
FACILITIES PROCUREMENT

BID SUBMISSION

FOR

AVERY POINT ACADEMIC BUILDING ROOF REPLACEMENT

PROJECT NUMBER: 300098

UNIVERSITY OF CONNECTICUT
STORRS CAMPUS
Storrs, Connecticut

February 26, 2019

NAME OF FIRM SUBMITTING:

_____

UNIVERSITY OF CONNECTICUT
AVERY POINT ACADEMIC BUILDING ROOF REPLACEMENT
PROJECT NUMBER: 300098

FORM OF PROPOSAL

Proposal Submission Checklist

The following documents and information shall be submitted and included as your bid proposal. All documents must be submitted in a sealed envelope reflecting the submitting firm's name and address; addressed to CPFP attention to the appropriate purchasing agent, clearly stating the project name and project number. All required documents are to be included and executed in their original condition as issued.

- ☐ Ethics Forms 5 (if contract value is > $50,000) and 6 (if contract value is > $500,000).
- ☐ Bid Bond
- ☐ Fully executed Form of Proposal
- ☐ Copies of prequalification certificate and an updated statement as prescribed by Commissioner of Administrative Services for the State of Connecticut.

Contractors Certification

By submitting a bid proposal, the bidder is attesting to the review, reading, understanding, and acceptance of the information and requirements of the project contained within the bid documents without exception. By submitting a bid proposal, the Bidder represents that they have examined the site, and accept the conditions under which the work will be performed and we have read, evaluated, understand, and accepted all the Contract Documents, including those documents provided and their content in their entirety and have included all provisions necessary to accomplish all work according to the information and requirements prescribed therein without exception.

SUBMITTED BY:
Firm: _____ Date: _____

Address: _____

SUBMITTED BY: _____

Print Name: _____

Title: _____

Email Address: _____

Phone Number: _____

Contractor's Initials:_____

FORM OF PROPOSAL

University of Connecticut
Cesar Alonzo, Procurement Services
Capital Project & Facilities Procurement
3 Discovery Drive, Unit 6047
Storrs, Connecticut 06269-6047

Dear Mr. Alonzo:

1. In accordance with Connecticut General Statutes Sections 10a-109a through 10a-109y and pursuant to, and in compliance with your Invitation to Bid, the Notice and Instructions to Bidders, the Form of Contract, including the conditions thereto, the form of required bond, I (we) propose to furnish the labor and/or materials installed as required for the project named and numbered on the FORM OF PROPOSAL of this proposal to the extent of the Proposal submitted herein, furnishing all necessary equipment, machinery, tools, labor and other means of construction, and all materials specified in the manner and at the time prescribed strictly in accordance with the provisions of the Contract including specifications and/or drawings together with all addenda issued and received prior to the scheduled closing time for the receipt of the bids, and in conformity with requirements of the University of Connecticut and any laws or departmental regulations of the State of Connecticut or of the United States which may affect the same, for and in consideration of the price(s) stated on the said FORM OF PROPOSAL, hereof.

2. The Lump Sum Base Bid by me (us) on the FORM OF PROPOSAL includes all work indicated on the drawings and/or described in the specifications (including the furnishing and installing of all required materials, labor, equipment and allowances where applicable), except:

   A. Work covered by Alternates as may be listed on the FORM OF PROPOSAL.

   B. Contingent work covered by Unit Prices as may be listed on the FORM OF PROPOSAL.

   C. Work covered by Options as may be listed on the FORM OF PROPOSAL.

3. This proposal is submitted subject to and in compliance with the foregoing and following conditions and/or information.

   A. AWARD: All proposals shall be subject to the provisions and requirements of the Bid Documents and for purpose of award, consideration shall be given only to proposals submitted by qualified and responsible bidders.

   B. COMMENCEMENT AND COMPLETION OF WORK: Contractor shall commence and complete the work in accordance with the requirements of the Contract Documents.

   C. If the Contractor fails to complete the work within the time required by the Contract Documents, the University shall have the right to assess liquidated damages as provided in Paragraph 9.11 of the General Conditions.

   D. CONTRACTORS INSURANCE REQUIRED:
      1. The limits of liability and coverages shall be those set forth in Article 11 of the General Conditions included with this bid package (or as previously executed with the on-call trade contract).

 Contractor's Initials:_____

E. REQUIRED PERCENTAGES OF WORK AND SET-ASIDES

.1 If awarded this contract, we (I) as the General Contractor on this Project shall be required to perform not less than 10% of the completed dollar value of the Work with its own forces.

.2 We (I) as the General Contractor on this project shall award not less than 30% of the total Contract Price to subcontractors who are certified and eligible to participate under the State of Connecticut Small Business Set Aside Program, of which 10% (of the total Contract) must be awarded to Women Owned or Minority Businesses. This requirement must be met even if the General Contractor is certified and eligible to participate in the Small Business Set Aside Program. To facilitate compliance with this requirement for set aside subcontractors, submit a list of certified set aside contractors to be used on this project along with the dollar amounts to be paid to each, on the form provided, and a copy of their current certification must be attached. This information will be considered as part of your bid proposal and failure to comply with any portion of this requirement, including but not limited to failure to list or meet the necessary dollar amount of percentage of the bid price will be cause to reject your bid.

F. NONDISCRIMINATION & LABOR RECRUITMENT:

We (I) agree that the Contract awarded for this project shall be subject to the Executive Orders No. Three and Seventeen, promulgated June 16, 1971 and February 15, 1973 respectively and to the Guidelines and Rules of the State Labor Department implementing Executive Order No. Three and further agree to submit reports of Compliance Staffing on Labor Department Form E.O.3-1, when and as requested.

G. FEDERAL & STATE WAGE DETERMINATIONS AND PRICING CONSIDERATION:

.1 Each contractor who is awarded a contract on or after October 1, 2002 shall be subject to provisions of the Connecticut General Statutes, Section 31-53 as amended by Public Act 02-69, “An Act Concerning Annual Adjustments to Prevailing Wages”.

.2 In determining bid price, consideration should be given to Section 31-53 of the General Statutes of Connecticut as amended by Public Act 02-69, “An Act Concerning Annual Adjustments to Prevailing Wages”. Such prevailing wage adjustment will not be considered a basis for an annual contract adjustment.

.3 The State of Connecticut Labor Department Wage Schedule where required, shall be provided with these documents, typically with the Bidders’ Convenience Package, or will be incorporated in the Contract Documents as an Addendum. At the time of bidding, the bidder agrees to accept the current prevailing wage scale, as well as any annual adjustment to the prevailing wage scale, as provided by the Connecticut Department of Labor. Wage Rages will be posted each July 1st on the Department of Labor website: www.ctdol.state.ct.us . Such prevailing wage adjustment will not be considered a basis for an annual contract amendment.

H. CERTIFICATION OF BIDDER REGARDING EQUAL EMPLOYMENT OPPORTUNITY & NON-SEGREGATED FACILITIES:

We (I) acknowledge that we (I) and our subcontractors are obligated to fill out the forms provided by the University of Connecticut Office of Capital Project and Facilities Procurement and to agree to certify to the compliance of non-segregated facilities.

I. NOTICE TO EXECUTIVE BRANCH STATE CONTRACTORS AND PROSPECTIVE STATE CONTRACTORS OR CAMPAIGN CONTRIBUTION AND SOLICITATION BAN.

With regard to a State contract as defined in P.A. 07-1 having a value in a contract year of $50,000 or more or a combination or series of such agreements or contracts having a value of $100,000 or more, the authorized signatory to this submission in response to the State's solicitation expressly acknowledges receipt of the State Elections Enforcement Commission's notice advertising prospective principals of the contents of the notice. See Attachment SEEC Form 11.

4. ACCOMPANYING THIS PROPOSAL IS:

A. A CERTIFIED CHECK drawn to the order of the University of Connecticut in the amount of 10% of the Bid, i.e.:

_____ DOLLARS $_____

and drawn on the _____
(STATE BANK & TRUST COMPANY)

_____ located at _____
(A NATIONAL BANKING ASSOCIATION) (CITY & STATE)

which is understood shall be cashed and the proceeds thereof used so far as may be necessary to reimburse the State of Connecticut for losses and damages arising by virtue of my (our) failure to file the required Bonds and execute the required contract in this proposal as accepted by the University of Connecticut.

OR;

B. A BID BOND having as surety thereto a Surety Company for Companies authorized to transact business in the State of Connecticut and made out in the penal sum of 10% of the bid, (Bids $50,000 and greater) i.e.:

_____ DOLLARS $_____

If the bidder is a joint venture, the Bid Bond shall specifically identify and include each joint venturer as a principal.

C. If the bidder is a joint venture, a copy of the executed Joint Venture Agreement shall be submitted along with the bid materials.

5. We (I), the undersigned, hereby declare that I am (we are) the only person(s) interested in the proposal and that it is without any connection with any other person making any bid for the same work. No person acting for, or employed by, the State of Connecticut is directly interested in this proposal, or in any contract which may be made under it, or in expected profits to arise therefrom. This proposal is made without directly or indirectly influencing or attempting to influence any other person or corporation to bid or refrain from bidding or to influence the amount of the bid of any other person or corporation. This proposal is made in good faith without collusion or connection with any other person bidding for the same

work and this proposal is made with distinct reference and relation to the plans and specifications prepared for this Contract. I (We) further declare that in regard to the conditions affecting the work to be done and the labor and materials needed, this proposal is based solely on my (our) investigation and research and not in reliance upon any representations of any employee, officer or agent of the State.

6. Each class of work set forth in a separate Section of the Specifications and designated as a subtrade in Item 2A of the proposal pages shall be the matter of a subcontract made in accordance with the procedures set forth in the Bid and Contract Documents.

7. The undersigned agrees that, if selected as General Contractor, he shall, within ten (10) days, Saturdays, Sundays and legal holidays excluded, after presentation thereof by the University of Connecticut, execute a contract in accordance with the terms of this general bid.

8. The undersigned agrees and warrants that he has made good faith efforts to employ minority business enterprises as subcontractors and suppliers of materials under such contract and shall provide the Commission on Human Rights and Opportunities with such information as is requested by the Commission concerning his employment practices and procedures as they relate to the provisions of the Connecticut General Statutes governing contract requirements.

9. The undersigned acknowledges that should their submitted Form of Proposal fail to have included a copy of your firm's prequalification certificate and an updated statement accompany their bid submission, that their bid will be invalid and considered non-responsive. Per CGS 4b-91 amended.

Contractor's Initials:_____

A. STANDARD BID BOND:

NOW ALL MEN BY THESE PRESENTS,

That we, _____ hereinafter called the principal, of _____, as principal, and _____, hereinafter called the Surety, a corporation organized and existing under the laws of the State of _____, and duly authorized to transact a surety business in the State of Connecticut, as Surety, are held and firmly bound unto the State of Connecticut, as obligee, in the penal sum of ten (10) percent of the amount of the bid set forth in a proposal hereinafter mentioned, _____, in lawful money of the United States of America, for the payment of which sum, well and truly to be made to the Obligee, the Principal and the Surety bind, themselves, their heirs, executors, administrators, successors and assigns, jointly and severally, firmly by these presents.

THE CONDITION OF THIS OBLIGATION IS SUCH,

That, whereas the Principal has submitted or is about to submit a proposal the other obligee related to a contract for the Project Referenced above.

NOW, THEREFORE, if the said contract be awarded to the Principal and the Principal shall, within such time as may be specified, enter in the said contract in writing with the State of Connecticut and give the required bonds, with surety acceptable to the Obligee, or if the Principal shall fail to do so, pay to Obligee the damages which the Obligee may suffer by reason of such failure not exceeding the penal sum of this bond, then this obligation shall be void, otherwise to remain in full force and effect.

SIGNED, SEALED AND DATED this _____ day of _____, 20___

_____	_____	_____	_____
Witness	Surety	Witness	Principal
	_____		_____
	Title		Title

B. The undersigned proposes to furnish all labor and material required for:

AVERY POINT ACADEMIC BUILDING ROOF REPLACEMENT
PROJECT NUMBER: 300098

University of Connecticut
Storrs, CT

In accordance with the accompanying Drawings and Specifications prepared by:

SIMPSON GUMPERTZ & HEGER, INC.

The Contract Price specified below subject to additions and deductions according to the terms of the Contract Documents.

C. BID CLARIFICATIONS:

The undersigned acknowledges receipt of the following Bid Clarifications issued during the bidding period and has included all changes therein in the above base bid amount.

Clarifications/Addenda #_____, Dated_____
Clarifications/Addenda #_____, Dated_____
Clarifications/Addenda #_____, Dated_____
Clarifications/Addenda #_____, Dated_____

D. PROPOSED BASE CONTRACT PRICE:

Having carefully examined the Bid Documents for the above reference project, and having visited the project site and examined all conditions affecting the work, the undersigned, upon written notice of award of contract, agrees to provide all labor, supervision, materials, tools, construction equipment, services, safety, insurance, bonds, and to pay all applicable taxes, and other costs necessary or required to complete the Work of this Bid in full accordance with all Bid Documents and within the required timeframe as indicated by the proposed schedule for the Lump Sum Bid of:

_____US Dollars

($_____) (Which incorporates all allowances as may be listed in the plans and specifications)

(Show the amount in both words and figures. In case of discrepancy, amount shown in words will govern.)

The University reserves the right to elect to implement some, all or none of the Alternates and/or Options set forth in the Proposal forms, as may be in the best interest of the University. The low Bid shall be determined by taking the Base Price set forth in the Proposal form as selected by the University, plus the Alternates and/or Options selected by the University.

E. SCHEDULE OF ALTERNATES:

Alternate No. 1: Stair Low Sloped Roofs

1. Base Bid: Remove and replace metal roof edge flashing at the stair penthouse roof and provide EPDM membrane flashing to integrate edge metal with the existing roof as indicated on Sheet AE3.1 and as specified in Division 07 6000.
2. Alternate: Remove existing single-ply membrane roof, insulation, adhered vapor barrier, and metal flashings, and provide new vapor retarder, insulation, cover board, adhered PVC membrane, and membrane and metal flashings at the stair penthouse roof and low stair tower roofs as indicated on Sheet AE3.1 and as specified in Division 07 5000.
3. Add/Deduct (Circle one): $_____

Alternate No. 2 Asphalt Shingle Roof Replacement

1. Base Bid: Remove bottom 5 ft. of the asphalt shingles and membrane underlayment on the Lecture Hall roof and provide new self-adhered membrane underlayment and asphalt singles to match existing as indicated on Sheet AE1.0 and as specified in Division 07 3100.
2. Alternate: Remove the asphalt shingles and membrane underlayment on the entire Lecture Hall roof and provide self-adhered membrane underlayment, felt underlayment, and asphalt shingles to match existing as indicated on Sheet AE1.0 and as specified in Division 07 3100.
3. Add/Deduct (Circle one): $_____

END OF ALTERNATES

F. SCHEDULE OF UNIT PRICES: All rates are inclusive of all costs of wages, applicable taxes, benefits, applicable insurance. The rates provided will be negotiated and included as part of the contract and of your subcontracts. The Unit Prices herein shall remain valid for the life of the project and include all costs for a complete installation. Unit prices are good for both adds and deducts.

A. Unit Price 1: Concrete roof deck shallow repairs.
1. Description: Remove unsound roof deck concrete and repair with specified concrete repair material, as required, according to Division 03 Section "Concrete Deck Repairs."
2. Unit of Measurement: Square foot of concrete removed and repaired, based on survey of area removed.
3. Quantity Allowance: Coordinate unit price with allowance adjustment requirements in Division 01 Section "Allowances."
4. Amount: $_____

B. Unit Price No. 2: Concrete roof deck deep repairs.
1. Description: Remove unsound roof deck concrete greater than 1-½ in. deep, install concrete patch reinforcement, and repair with specified concrete repair material, as required, according to Division 03 Section "Concrete Deck Repairs."
2. Unit of Measurement: Cubic foot of concrete removed and repaired, based on survey of volume removed.
3. Quantity Allowance: Coordinate unit price with allowance adjustment requirements in Division 01 Section "Allowances."
4. Amount: $_____

C. Unit Price No. 3: Small Containment Preparation.
1. Description: Small Containment Preparation (Less than 160 square\260 linear feet of asbestos containing material). Pricing for containments with larger amounts of materials are to be INCLUDED in the unit prices themselves listed below. There is no separate unit price for containments with larger amounts.
2. Unit of Measurement: Per containment.
3. Amount: $_____

D. Unit Price No. 4: Floor Tile/Flooring Materials and Mastic Removal and Disposal as ACM
1. Description: Floor Tile/Flooring Materials and Mastic (Includes All layers of wood, carpeting, multiple layers of floor tiles/ flooring materials/ wood/ceramic/ terazza/ concrete /mastics, levelastics, contaminated materials, etc.) Removal and Disposal as ACM.
2. Unit of Measurement: Square foot.
3. Amount: $_____

E. Unit Price No. 5: Mudded Pipe Fitting Insulation Removal and Disposal as ACM.
1. Description: Mudded Pipe Fitting Insulation Removal and Disposal as ACM.
2. Unit of Measurement: Per fitting/joint.
3. Amount: $_____

F. Unit Price No. 6: Roof Drain Insulation Removal and Disposal as ACM.
1. Description: Roof Drain Insulation Removal and Disposal as ACM.
2. Unit of Measurement: Per roof drain.
3. Amount: $_____

G. Unit Price No. 7: Glove Bag Removal and Disposal as ACM.
1. Description: Glove Bag Removal and Disposal as ACM.
2. Unit of Measurement: Per bag.
3. Amount: $_____

H. Unit Price No. 8: Pipe and Pipe Fitting Insulation Removal and Disposal as ACM.
1. Description: Pipe and Pipe Fitting Insulation Removal and Disposal as ACM.

2. Unit of Measurement: Per linear foot.
3. Amount: $_____

I. Unit Price No. 9: Black Tars/Mastics/Damp-proofing Materials Removal and Disposal as ACM

1. Description: Black Tars/Mastics/Damp-proofing Materials (including contaminated substrates – interior and exterior – behind walls, around windows/doors, etc.) Removal and Disposal as ACM.
2. Unit of Measurement: Per square foot.
3. Amount: $_____

J. Unit Price No. 10: Window/Door Caulking/Glazing Compound Removal and Disposal as ACM.

1. Description: Window/Door Caulking/Glazing Compound (including substrates) Removal and Disposal as ACM.
2. Unit of Measurement: Per linear foot.
3. Amount: $_____

K. Unit Price No. 11: Window/Door Caulking/Glazing Compound Removal and Disposal as PCBs.

1. Description: Window/Door Caulking/Glazing Compound (including substrates) Removal and Disposal as PCBs greater than 50 ppm.
2. Unit of Measurement: Per linear foot.
3. Amount: $_____

L. Unit Price No. 12: Window/Door Caulking/Glazing Compound Removal and Disposal as ACM and PCBs.

1. Description: Window/Door Caulking/Glazing Compound (including substrates) Removal and Disposal as ACM and PCBs greater than 50 ppm.
2. Unit of Measurement: Per linear foot.
3. Amount: $_____

M. Unit Price No. 13: 40 Yard Dumpster for ACM.

1. Description: 40 Yard Dumpster for ACM.
2. Unit of Measurement: Per dumpster.
3. Amount: $_____

N. Unit Price No. 15: 40 Yard Dumpster for PCB Containing Materials.

1. Description: 40 Yard Dumpster for PCB Containing Materials >50 PPM EPA Bulk Product Waste.
2. Unit of Measurement: Per dumpster.
3. Amount: $_____

O. Unit Price No. 15: 40 Yard Dumpster for ACM and PCB Containing Material.

1. Description: 40 Yard Dumpster for ACM and PCB Containing Materials >50 PPM EPA Bulk Product Waste.
2. Unit of Measurement: Per dumpster.
3. Amount: $_____

P. Unit Price No. 16: Sandblasting Paint and Disposal of as Hazardous Lead Waste.

1. Description: Sandblasting Paint and Disposal of as Hazardous Lead Waste.
2. Unit of Measurement: Per square foot.
3. Amount: $_____

Q. Unit Price No. 17: Sandblasting Paint and Disposal of as PCB Remediation Waste.

1. Description: Sandblasting Paint and Disposal of as PCB Remediation Waste
2. Unit of Measurement: Per square foot.
3. Amount: $_____

End of Unit Prices

G. SCHEDULE OF VALUES:

The undersigned agrees that the Schedule of Values submitted with this Bid is a true representation of the distribution of the costs of this project and equals the Stipulated Sum shown above. The Schedule of Values is an integral part of this proposal. Please indicate N/A for those divisions of work not applicable. The costs provided below include the complete cost for furnishing and installing of materials, labor, and equipment required to provide the complete scope of work for each specified division (includes the costs of applicable taxes, insurance, bonds, overhead, profit, small tools, travel, parking, supervision, etc.). The "TOTAL" price must equal your total lump sum bid proposal.

Division	Group	
01	General Requirements	**$**
02	Removals	**$**
03	Concrete	**$**
04	Masonry	**$**
05	Metals	**$**
06	Carpentry	**$**
07	Thermal & Moisture Protection	**$**
08	Doors and Windows	**$**
09	Painting	**$**
Insurance		**$**
Bonds		**$**
Allowance #1	10 square feet of shallow unsound concrete removal and repair	**$**
Allowance #2	10 cubic feet of deep (greater than 1-1/2 in. depth) unsound concrete removal, install concrete patch reinforcement, and repair	**$**
TOTAL		**$**

H. The subdivision of Work in the proposed Contract Price is as follows:

ITEM 1 WORK BY GENERAL CONTRACTOR:
For all work other than that to be done by subcontractors included in Item 2A and Item 2B.

$_____(ITEM 1)

Note: In accordance with paragraph 3.E.1 this amount, together with work by the general contractor as listed in Item 2A below, must be at least 10% of the total bid price.

ITEM 2A WORK BY SUBCONTRACTORS NAMED:

Subcontractors and prices for the following trades must be listed (if such prices exceed $25,000). However, the general bidder may list himself together with his price if he customarily performs any of the trades specified. If the general contractor requires a performance and/or labor & material payment bond then the general contractor must indicate below which of the subcontractors are subject to this requirement. The amount (%) shall not exceed the subcontractor's price listed below.

DESCRIPTION	NAME OF SUBCONTACTOR	DOLLAR AMOUNT	LABOR & MATERIAL BOND	PERFORMANCE BOND
MASONRY				
ELECTRICAL				
MECHANICAL WITHOUT HVAC				
HVAC				

A copy of the executed agreement between the successful bidder and the named subcontractors above must be presented to the Office of CPFP at time of contract signing. The contract may not be executed until copies of executed agreements are received by CPFP.

ITEM 2B WORK BY SUBCONTRACTORS NOT NAMED:

$_____
(INCLUDES ALL SUBCONTRACT WORK NOT LISTED IN ITEM 2A)

The undersigned agrees that each of the subcontractors listed on this FORM OF PROPOSAL will be used for the work indicated at the amount stated, unless a substitution is permitted by the University.

FORM OF PROPOSAL

I. SET-ASIDE CONTRACTOR SCHEDULE

By submitting a bid for this project, the bidder represents that it has used good faith efforts to secure commitments from SBEs and MBEs in a value that is equal to, or greater than, the Set Aside (as defined in the Invitation to Bid). If, despite its good faith efforts, a bidder has not yet been able to secure commitments for the full value of the Set Aside, the bidder will nonetheless be expected to meet the Set Aside if it is awarded the contract for this project

Below, the bidder shall list those SBEs and MBEs from whom the bidder has secured commitments for the project as of the date hereof and the dollar amounts the bidder anticipates awarding to each such SBE/MBE.
The amount is NOT LESS THAN 30% of the proposed base contract price as stated on the Form of Proposal, Section D.

Name	Address	Amount

CERTIFICATE OF ELIGIBILIT HAS BEEN OBTAINED THROUGH THE FOLLOWING WEBSITE;
https://www.biznet.ct.gov/SupplierDiversity/SDSearch.aspx

FOR EACH OF THE NAMED CONTRACTORS AND IS BEING SUBMITTED WITH THIS FORM.
The Undersigned agrees that each of the subcontractors listed on the proposal form will be used for the work indicated at the amount stated, unless a substitution is permitted by the awarding authority.

_____ _____
Authorized Signature Title

_____
Company Name

J. BIDDER CONTRACT COMPLIANCE MONITORING REPORT

PART I - Bidder Information

<table>
<tr><td>Company Name
Street Address
City & State
Chief Executive</td><td>Bidder Federal Employer
Identification Number_____
Or
Social Security Number_____</td></tr>
<tr><td>Major Business Activity
(brief description)</td><td rowspan="3">Bidder Identification
(response optional/definitions in Instruction to Bidders page 18)

-Bidder is a small contractor. Yes__ No__

-Bidder is a minority business enterprise Yes__ No__
(If yes, check ownership category)

Black___ Hispanic___ Asian American___ American Indian/Alaskan Native ____
Iberian Peninsula___
Individual(s) with a Physical Disability___
Female___
-Bidder is certified as above by State of CT Yes__ No__ -
DAS Certification Number _____</td></tr>
<tr><td>Bidder Parent Company(If any)</td></tr>
<tr><td>Other Locations in Ct. (If any)</td></tr>
</table>

PART II - Bidder Nondiscrimination Policies and Procedures

1. Does your company have a written Affirmative Action/Equal Employment Opportunity statement posted on company bulletin boards? Yes__ No__	7. Do all of your company contracts and purchase orders contain non-discrimination statements as required by Sections 4a-60 & 4a-60a Conn. Gen. Stat.? Yes__ No__
2. Does your company have the state-mandated sexual harassment prevention in the workplace policy posted on company bulletin boards? Yes__ No__	8. Do you, upon request, provide reasonable accommodation to employees, or applicants for employment, who have physical or mental disability? Yes__ No__
3. Do you notify all recruitment sources in writing of your company's Affirmative Action/Equal Employment Opportunity employment policy? Yes__ No__	9. Does your company have a mandatory retirement age for all employees? Yes__ No__
4. Do your company advertisements contain a written statement that you are an Affirmative Action/Equal Opportunity Employer? Yes__ No__	10. If your company has 50 or more employees, have you provided at least two (2) hours of sexual harassment training to all of your supervisors? Yes__ No__ NA__
5. Do you notify the Ct. State Employment Service of all employment openings with your company? Yes__ No__	11. If your company has apprenticeship programs, do they meet the Affirmative Action/Equal Employment Opportunity requirements of the apprenticeship standards of the Ct. Dept. of Labor? Yes__ No__ NA__
6. Does your company have a collective bargaining agreement with workers? Yes__ No__ 6a. If yes, do the collective bargaining agreements contain non-discrimination clauses covering all workers? Yes__ No__ 6b. Have you notified each union in writing of your commitments under the nondiscrimination requirements of contracts with the state of Ct? Yes__ No__	12. Does your company have a written affirmative action Plan? If no, please explain. Yes__ No__ 13. Is there a person in your company who is responsible for equal employment opportunity? Yes__ No__ If yes, give name and phone number. _____ _____ _____

Part III - Bidder Subcontracting Practices

1. Will the work of this contract include subcontractors or suppliers? Yes__ No__

1a. If yes, please list all subcontractors and suppliers and report if they are a small contractor and/or a minority business enterprise as defined on page 1 / use additional sheet if necessary)

1b. Will the work of this contract require additional subcontractors or suppliers other than those identified in 1a? Yes__ No__

Part IV – Bidder Employment Information Date:

JOB CATEGORY	OVERALL TOTALS	WHITE (not of Hispanic origin)		BLACK (not of Hispanic origin)		HISPANIC		ASIAN or PACIFIC ISLANDER		AMERICAN INDIAN or ALASKAN NATIVE	
		Male	Female	Male	Female	Male	Female	Male	Female	Male	Female
Management											
Business & Financial Ops											
Computer Specialists											
Architecture/Engineering											
Office & Admin Support											
Bldg/ Grounds Cleaning/Maintenance											
Construction & Extraction											
Installation , Maintenance & Repair											
Material Moving Workers											
TOTALS ABOVE											
Total One Year Ago											
FORMAL ON THE JOB TRAINEES		(ENTER FIGURES FOR THE SAME CATEGORIES AS ARE SHOWN ABOVE)									
Apprentices											
Trainees											

PART V - Bidder Hiring and Recruitment Practices

1. Which of the following recruitment sources are used by you? (check yes or not and report percent used)				2. Check (x) any of the below listed requirements that you use as a hiring qualification		3. Describe below any other practices or actions that you take which show that you hire, train, and promote employees without discrimination?
SOURCE	YES	NO	% of applicants provided by source	(x)		
State Employment Service					Work Experience	
Private Employment Agencies					Ability To Speak Or Write English	
Schools And Colleges					Written Tests	
Newspaper Advertisements					High School Diploma	
Walk Ins					College Degree	
Present Employees					Union Membership	
Labor Organizations					Personal Recommendations	
Minority/Community Organizations					Height Or Weight	
Others Please Identify					Car Ownership	
					Arrest Record	
					Wage Garnishments	

Certification (Read this form and check your statements on it CAREFULLY before signing).
I certify that the statements made by me on this BIDDER CONTRACT COMPLIANCE MONITORING REPORT are complete and true to the best of my knowledge and belief, and are made in good faith. I understand that if I knowingly make any misstatements of facts, I am subject to be declared in non-compliance with Section 4a-60, 4a-60a, and related sections of the CONN. GEN. SAT.

Signature) (Date Signed)

_____

(Title) (Telephone)

K. PROPOSER'S QUALIFICATION/RESPONSIBILITY STATEMENT

The Proposer shall have already completed and submitted the Questionnaire and other submission required by the University in its Invitation to Pre-Qualify, regarding the Proposer's qualifications. If changed circumstances arising since the initial submission, or other facts have occurred which would result in a material change to any of the Proposer's initial responses or submissions, the Proposer shall provide any such supplementary, or revised information at this time, along with its Proposal.

1. State, identify any such changed circumstances or other facts and provide any such supplementary or revised information as described above, identifying specifically, by number and content, each prior question, response to the Questionnaire, or information changed, supplemented or revised. (Attach a separate sheet if necessary)

2. State "NONE" if there are no changes to be made. _____

Please note that if the end date of the time period covered by the information submitted during your pre-qualification is three or more months old, please provide current financial documentation demonstrating that your present financial position has remained the same, or showing and identifying any changes in any way, in relation to the audited financial statement you submitted with your pre-qualified application on this proposal.

Dated at this day of 20
Name of Organization:
Signature:
Print Name:
Title:
Notary Statement:
Mr./Mrs./Ms. being duly sworn deposes and says that he/she
is the of and that the
(Position or Title) (Firm Name)
answers to the foregoing questions and all statements therein contained are true and correct.
Subscribed and sworn to before me this day of 20
Notary Public:
My Commission Expires: 20

L. ETHICS FORMS **-** A duly authorized representative of the company must sign these forms

- √ **These forms must be notarized and clearly show notary seal or acknowledged by a Commissioner of the Superior Court**.

- √ ALL REQUIRED forms, **must be completed, signed and returned** by the bidder/proposer as part of the bid/proposal/RFQ response package.

- √ Failure to submit ALL REQUIRED forms constitutes grounds for rejection of your bid/proposal/RFQ.

- √ If it is determined by the University of Connecticut and/or State of Connecticut that **any information requested was not referenced and submitted** with this bid/proposal/RFQ/LOI, and then such determination **will be just cause for disqualification of the bid/proposal/RFQ.**

STATE OF CONNECTICUT
GIFT AND CAMPAIGN CONTRIBUTION CERTIFICATION

Written or electronic certification to accompany a State contract with a value of $50,000 or more in a calendar or fiscal year, pursuant to C.G.S. §§ 4-250 and 4-252(c); Governor M. Jodi Rell's Executive Orders No. 1, Para. 8, and No. 7C, Para. 10; and C.G.S. §9-612(g)(2)

INSTRUCTIONS:
Complete all sections of the form. Attach additional pages, if necessary, to provide full disclosure about any lawful campaign contributions made to campaigns of candidates for statewide public office or the General Assembly, as described herein. Sign and date the form, under oath, in the presence of a Commissioner of the Superior Court or Notary Public. Submit the completed form to the awarding State agency at the time of initial contract execution and if there is a change in the information contained in the most recently filed certification, such person shall submit an updated certification either (i) not later than thirty (30) days after the effective date of such change or (ii) upon the submittal of any new bid or proposal for a contract, whichever is earlier. Such person shall also submit an accurate, updated certification not later than fourteen days after the twelve-month anniversary of the most recently filed certification or updated certification.

CHECK ONE: ☐ Initial Certification ☐ 12 Month Anniversary Update (Multi-year contracts only.)

☐ Updated Certification because of change of information contained in the most recently filed certification or twelve-month anniversary update.

GIFT CERTIFICATION:

As used in this certification, the following terms have the meaning set forth below:

1) "Contract" means that contract between the State of Connecticut (and/or one or more of it agencies o instrumentalities) and the Contractor, attached hereto, or as otherwise described by the awarding Stat agency below;
2) If this is an Initial Certification, "Execution Date" means the date the Contract is fully executed by, and becomes effective between, the parties; if this is a twelve-month anniversary update, "Execution Date" means the date this certification is signed by the Contractor;
3) "Contractor" means the person, firm or corporation named as the contactor below;
4) "Applicable Public Official or State Employee" means any public official or state employee described i C.G.S. §4-252(c)(1)(i) or (ii);
5) **"Gift"** has the same meaning given that term in C.G.S. § 4-250(1);
6) "Principals or Key Personnel" means and refers to those principals and key personnel of the Contractor, and its or their agents, as described in C.G.S. §§ 4-250(5) and 4-252(c)(1)(B) and (C).

I, the undersigned, am a Principal or Key Personnel of the person, firm or corporation authorized to execute this certification on behalf of the Contractor. I hereby certify that, no gifts were made by (A) such person, firm, corporation, (B) any principals and key personnel of the person firm or corporation who participate substantially in preparing bids, proposals or negotiating state contracts or (C) any agent of such, firm, corporation, or principals or key personnel who participates substantially in preparing bids, proposals or negotiating state contracts, to (i) any public official or state employee of the state agency or quasi-public agency soliciting bids or proposals for state contracts who participates substantially in the preparation of bid solicitations or request for proposals for state contracts or the negotiation or award of state contracts or (ii) any public official or state employee of any other state agency, who has supervisory or appointing authority over such state agency or quasi-public agency.

I further certify that no Principals or Key Personnel know of any action by the Contractor to circumvent (or which would result in the circumvention of) the above certification regarding **Gifts** by providing for any other Principals, Key Personnel, officials, or employees of the Contractor, or its or their agents, to make a **Gift** to any Applicable Public Official or State Employee. I further certify that the Contractor made the bid or proposal for the Contract without fraud or collusion with any person.

CAMPAIGN CONTRIBUTION CERTIFICATION:

I further certify that, on or after December 31, 2006, neither the Contractor nor any of its principals, as defined in C.G.S. § 9-612(g)(1), has made any **campaign contributions** to, or solicited any contributions on behalf of, any exploratory committee, candidate committee, political committee, or party committee established by, or supporting or authorized to support, any candidate for statewide public office, in violation of C.G.S. § 9-612(g)(2)(A). I further certify that **all lawful campaign contributions** that have been made on or after December 31, 2006 by the Contractor or any of its principals, as defined in C.G.S. § 9-612(g)(1), to, or solicited on behalf of, any exploratory committee, candidate committee, political committee, or party committee established by, or supporting or authorized to support any candidates for statewide public office or the General Assembly, are listed below:

Lawful Campaign Contributions to Candidates for Statewide Public Office:

Contribution Date	Name of Contributor	Recipient	Value	Description

Lawful Campaign Contributions to Candidates for the General Assembly:

Contribution Date	Name of Contributor	Recipient	Value	Description

Sworn as true to the best of my knowledge and belief, subject to the penalties of false statement.

_____ _____
Printed Contractor Name **Printed Name of Authorized Official**

_____
Signature of Authorized Official

Subscribed and acknowledged before me this _____ day of _____, 20___.

_____
Commissioner of the Superior Court (or Notary Public)

_____
My Commission Expires

OPM Ethics Form 5 **Rev. 3-28-14**

STATE OF CONNECTICUT
CONSULTING AGREEMENT AFFIDAVIT

Affidavit to accompany a bid or proposal for the purchase of goods and services with a value of $50,000 or more in a calendar or fiscal year, pursuant to Connecticut General Statutes §§ 4a-81(a) and 4a-81(b). For sole source or no bid contracts the form is submitted at time of contract execution.

INSTRUCTIONS:

If the bidder or vendor has entered into a consulting agreement, as defined by Connecticut General Statutes § 4a-81(b)(1): Complete all sections of the form. If the bidder or contractor has entered into more than one such consulting agreement, use a separate form for each agreement. Sign and date the form in the presence of a Commissioner of the Superior Court or Notary Public. **If the bidder or contractor has not entered into a consulting agreement, as defined by Connecticut General Statutes § 4a-81(b)(1):** Complete only the shaded section of the form. Sign and date the form in the presence of a Commissioner of the Superior Court or Notary Public.

Submit completed form to the awarding State agency with bid or proposal. For a sole source award, submit completed form to the awarding State agency at the time of contract execution.

This affidavit must be amended if there is any change in the information contained in the most recently filed affidavit not later than (i) thirty days after the effective date of any such change or (ii) upon the submittal of any new bid or proposal, whichever is earlier.

AFFIDAVIT: [Number of Affidavits Sworn and Subscribed On This Day: _____]

I, the undersigned, hereby swear that I am a principal or key personnel of the bidder or contractor awarded a contract, as described in Connecticut General Statutes § 4a-81(b), or that I am the individual awarded such a contract who is authorized to execute such contract. I further swear that I have not entered into any consulting agreement in connection with such contract, **except for the agreement listed below**:

_____ _____
Consultant's Name and Title Name of Firm (if applicable)

_____ _____ _____
Start Date End Date Cost

Description of Services Provided: _____

_____

Is the consultant a former State employee or former public official? ☐ YES ☐ NO

If YES: _____ _____
Name of Former State Agency Termination Date of Employment

Sworn as true to the best of my knowledge and belief, subject to the penalties of false statement.

_____ _____ _____
Printed Name of Bidder or Contractor **Signature of Principal or Key Personnel** **Date**

_____ _____
Printed Name (of above) Awarding State Agency

Sworn and subscribed before me on this _____ day of _____, 20___.

_____
Commissioner of the Superior Court or Notary Public

_____
My Commission Expires

OPM Ethics Form 6 **Rev. 10-01-11**

STATE OF CONNECTICUT

AFFIRMATION OF RECEIPT OF STATE ETHICS LAWS SUMMARY

Written or electronic affirmation to accompany a large State construction or procurement contract, having a cost of more than $500,000, pursuant to Connecticut General Statutes §§ 1-101mm and 1-101qq

INSTRUCTIONS:
Complete all sections of the form. Submit completed form to the awarding State agency or contractor, as directed below.

CHECK ONE:

☐ I am a person seeking a large State construction or procurement contract. I am submitting this affirmation to the awarding State agency with my bid or proposal. [Check this box if the contract will be awarded through a competitive process.]

☐ I am a contractor who has been awarded a large State construction or procurement contract. I am submitting this affirmation to the awarding State agency at the time of contract execution. [Check this box if the contract was a sole source award.]

☐ I am a subcontractor or consultant of a contractor who has been awarded a large State construction or procurement contract. I am submitting this affirmation to the contractor.

☐ I am a contractor who has already filed an affirmation, but I am updating such affirmation either (i) no later than thirty (30) days after the effective date of any such change or (ii) upon the submittal of any new bid or proposal, whichever is earlier.

IMPORTANT NOTE:

Within fifteen (15) days after the request of such agency, institution or quasi-public agency for such affirmation contractors shall submit the affirmations of their subcontractors and consultants to the awarding State agency. Failure to submit such affirmations in a timely manner shall be cause for termination of the large State construction or procurement contract.

AFFIRMATION:

I, the undersigned person, contractor, subcontractor, consultant, or the duly authorized representative thereof, affirm (1) receipt of the summary of State ethics laws* developed by the Office of State Ethics pursuant to Connecticut General Statutes § 1-81b and (2) that key employees of such person, contractor, subcontractor, or consultant have read and understand the summary and agree to comply with its provisions.

* The summary of State ethics laws is available on the State of Connecticut's Office of State Ethics website.

_____ _____
Signature Date

_____ _____
Printed Name Title

_____
Firm or Corporation (if applicable)

_____ _____ ____ _____
Street Address City State Zip

_____
Awarding State Agency

OPM Iran Certification Form 7 (Rev. 3-28-14)

STATE OF CONNECTICUT

Written or electronic PDF copy of the written certification to accompany a large state contract pursuant to P.A. No. 13-162 (Prohibiting State Contracts With Entities Making Certain Investments In Iran)

Respondent Name: _____

INSTRUCTIONS:

CHECK ONE: ☐ Initial Certification.
☐ Amendment or renewal.

A. Who must complete and submit this form. Effective October 1, 2013, this form must be submitted for any large state contract, as defined in section 4-250 of the Connecticut General Statutes. This form must always be submitted with the bid or proposal, or if there was no bid process, with the resulting contract, regardless of where the principal place of business is located.

Pursuant to P.A. No. 13-162, upon submission of a bid or prior to executing a large state contract, **the certification portion of this form must be completed** by any corporation, general partnership, limited partnership, limited liability partnership, joint venture, nonprofit organization or other business organization **whose principal place of business is located outside of the United States**. United States subsidiaries of foreign corporations are exempt. For purposes of this form, a "foreign corporation" is one that is organized and incorporated outside the United States of America.

Check applicable box:

☐ Respondent's principal place of business is within the United States or Respondent is a United States subsidiary of a foreign corporation. Respondents who check this box **are not required to complete the certification portion of this form**, but must submit this form with its Invitation to Bid ("ITB"), Request for Proposal ("RFP") or contract package if there was no bid process.

☐ Respondent's principal place of business is outside the United States and it is not a United States subsidiary of a foreign corporation. **CERTIFICATION required.** Please complete the certification portion of this form and submit it with the ITB or RFP response or contract package if there was no bid process.

B. Additional definitions.

7) "Large state contract" has the same meaning as defined in section 4–250 of the Connecticut General Statutes;
8) "Respondent" means the person whose name is set forth at the beginning of this form; and
9) "State agency" and "quasi-public agency" have the same meanings as provided in section 1–79 of the Connecticut General Statutes.

C. Certification requirements.

No state agency or quasi-public agency shall enter into any large state contract, or amend or renew any such contract with any Respondent whose principal place of business is located outside the United States and is not a United States subsidiary of a foreign corporation unless the Respondent has submitted this certification.

Complete all sections of this certification and sign and date it, under oath, in the presence of a Commissioner of the Superior Court, a Notary Public or a person authorized to take an oath in another state.

CERTIFICATION:

I, the undersigned, am the official authorized to execute contracts on behalf of the Respondent. I certify that:

☐ Respondent has made no direct investments of twenty million dollars or more in the energy sector of Iran on or after October 1, 2013, as described in Section 202 of the Comprehensive Iran Sanctions, Accountability and Divestment Act of 2010.

☐ Respondent has either made direct investments of twenty million dollars or more in the energy sector of Iran on or after October 1, 2013, as described in Section 202 of the Comprehensive Iran Sanctions, Accountability and Divestment Act of 2010, or Respondent made such an investment prior to October 1, 2013 and has now increased or renewed such an investment on or after said date, or both.

OPM Iran Certification Form 7 (Rev. 3-28-14) **Page 2 of 2**

Sworn as true to the best of my knowledge and belief, subject to the penalties of false statement.

_____ _____

Printed Respondent Name **Printed Name of Authorized Official**

_____

Signature of Authorized Official

Subscribed and acknowledged before me this _____ day of _____, 20___.

_____

Commissioner of the Superior Court (or Notary Public)

_____

My Commission Expires

Form B
07-08-2009

STATE OF CONNECTICUT

NONDISCRIMINATION CERTIFICATION — Representation By Entity For Contracts Valued at Less Than $50,000

Written representation that complies with the nondiscrimination agreements and warranties under Connecticut General Statutes §§ 4a-60(a)(1) and 4a-60a(a)(1), as amended

INSTRUCTIONS:

For use by an entity (corporation, limited liability company, or partnership) when entering into any contract type with the State of Connecticut valued at less than $50,000 for each year of the contract. Complete all sections of the form. Submit to the awarding State agency prior to contract execution.

REPRESENTATION OF AN ENTITY:

I, _____ , _____ , of _____ ,
Authorized Signatory Title Name of Entity

an entity duly formed and existing under the laws of _____ ,
Name of State or Commonwealth

represent that I am authorized to execute and deliver this representation on behalf of

_____ and that _____
Name of Entity Name of Entity

has a policy in place that complies with the nondiscrimination agreements and warranties of Connecticut General Statutes §§ 4a-60(a)(1) and 4a-60a(a)(1), as amended.

_____ _____
Authorized Signatory Date

_____
Printed Name

STATE OF CONNECTICUT

NONDISCRIMINATION CERTIFICATION — Affidavit By Entity For Contracts Valued at $50,000 or More

Documentation in the form of an affidavit signed under penalty of false statement by a chief executive officer, president, chairperson, member, or other corporate officer duly authorized to adopt corporate, company, or partnership policy that certifies the contractor complies with the nondiscrimination agreements and warranties under Connecticut General Statutes §§ 4a-60(a)(1) and 4a-60a(a)(1), as amended

INSTRUCTIONS:

For use by an entity (corporation, limited liability company, or partnership) when entering into any contract type with the State of Connecticut valued at $50,000 or more for any year of the contract. Complete all sections of the form. Sign form in the presence of a Commissioner of Superior Court or Notary Public. Submit to the awarding State agency prior to contract execution.

AFFIDAVIT:

I, the undersigned, am over the age of eighteen (18) and understand and appreciate the obligations of

an oath. I am _____ of _____, an entity
Signatory's Title Name of Entity

duly formed and existing under the laws of _____.
Name of State or Commonwealth

I certify that I am authorized to execute and deliver this affidavit on behalf of

_____ and that _____
Name of Entity Name of Entity

has a policy in place that complies with the nondiscrimination agreements and warranties of Connecticut

General Statutes §§ 4a-60(a)(1) and 4a-60a(a)(1), as amended.

_____
Authorized Signatory

_____
Printed Name

Sworn and subscribed to before me on this _____ day of _____, 20___.

_____ _____
Commissioner of the Superior Court/ Notary Public **Commission Expiration Date**

FORM OF PROPOSAL

All pages within the Form of Proposal must be completed, signed by a duly authorized representative of the firm and returned as part of the bid/proposal/RFQ response package. NO FACSIMILE SIGNATURE PERMITTED

- √ **If the form of proposal is being submitted by a Joint Venture, each Joint Venture shall sign the Proposal, and each Joint Venture agrees to be bound by the terms and conditions thereof.**
- √ **Failure to submit ALL REQUIRED forms constitutes grounds for rejection of your bid/proposal/RFQ.**
- √ **If it is determined by the University of Connecticut and/or State of Connecticut that any information requested but not referenced and submitted with this bid/proposal; such determination will be just cause for disqualification of the bid/proposal.**

(TO BE FILLED IN AND SIGNED BY THE BIDDER)

Signed the _____ day of _____ 20____.

Firm Name: _____

Street: _____

City/State/Zip Code: _____

Telephone Number: _____

Signature/Title: _____

Print Name/Title: _____

(TO BE FILLED IN AND SIGNED BY JOINT VENTURE IF APPLICABLE)

Firm Name: _____

Street: _____

City/State/Zip Code: _____

Telephone Number: _____

Signature/Title: _____

Print Name/Title: _____

Signature/Title: _____

Print Name/Title: _____

End of Form of Proposal

THIS IS A PUBLIC WORKS PROJECT

Covered by the

PREVAILING WAGE LAW

CT General Statutes Section 31-53

If you have QUESTIONS regarding your wages
CALL (860) 263-6790

Section 31-55 of the CT State Statutes requires every contractor or subcontractor performing work for the state to post in a prominent place the prevailing wages as determined by the Labor Commissioner.

Section 31-53b

Sec. 31-53b. Construction safety and health course. New miner training program. Proof of completion required for mechanics, laborers and workers on public works projects. Enforcement. Regulations. Exceptions. (a) Each contract for a public works project entered into on or after July 1, 2009, by the state or any of its agents, or by any political subdivision of the state or any of its agents, described in subsection (g) of section 31-53, shall contain a provision requiring that each contractor furnish proof with the weekly certified payroll form for the first week each employee begins work on such project that any person performing the work of a mechanic, laborer or worker pursuant to the classifications of labor under section 31-53 on such public works project, pursuant to such contract, has completed a course of at least ten hours in duration in construction safety and health approved by the federal Occupational Safety and Health Administration or, has completed a new miner training program approved by the Federal Mine Safety and Health Administration in accordance with 30 CFR 48 or, in the case of telecommunications employees, has completed at least ten hours of training in accordance with 29 CFR 1910.268. (b) Any person required to complete a course or program under subsection (a) of this section who has not completed the course or program shall be subject to removal from the worksite if the person does not provide documentation of having completed such course or program by the fifteenth day after the date the person is found to be in noncompliance. The Labor Commissioner or said commissioner's designee shall enforce this section. (c) Not later than January 1, 2009, the Labor Commissioner shall adopt regulations, in accordance with the provisions of chapter 54, to implement the provisions of subsections (a) and (b) of this section. Such regulations shall require that the ten-hour construction safety and health courses required under subsection (a) of this section be conducted in accordance with federal Occupational Safety and Health Administration Training Institute standards, or in accordance with Federal Mine Safety and Health Administration Standards or in accordance with 29 CFR 1910.268, as appropriate. The Labor Commissioner shall accept as sufficient proof of compliance with the provisions of subsection (a) or (b) of this section a student course completion card issued by the federal Occupational Safety and Health Administration Training Institute, or such other proof of compliance said commissioner deems appropriate, dated no earlier than five years before the commencement date of such public works project. (d) This section shall not apply to employees of public service companies, as defined in section 16-1, or drivers of commercial motor vehicles driving the vehicle on the public works project and delivering or picking up cargo from public works projects provided they perform no labor relating to the project other than the loading and unloading of their cargo.

(P.A. 06-175, S. 1; P.A. 08-83, S. 1.)

History: P.A. 08-83 amended Subsec. (a) by making provisions applicable to public works project contracts entered into on or after July 1, 2009, replacing provision re total cost of work with reference to Sec. 31-53(g), requiring proof in certified payroll form that new mechanic, laborer or worker has completed a 10-hour or more construction safety course and adding provision re new miner training program, amended Subsec. (b) by substituting "person" for "employee" and adding "or program", amended Subsec. (c) by adding "or in

accordance with Federal Mine Safety and Health Administration Standards" and setting new deadline of January 1, 2009, deleted former Subsec. (d) re "public building", added new Subsec. (d) re exemptions for public service company employees and delivery drivers who perform no labor other than delivery and made conforming and technical changes, effective January 1, 2009.

Informational Bulletin

THE 10-HOUR OSHA CONSTRUCTION SAFETY AND HEALTH COURSE, PROGRAM OR TRAINING

(Applicable to public works contracts as described by Conn. Gen. Stat. § 31-53(g) entered into *on or after July 1, 2009*)

(1) This requirement was created by Public Act No. 08-83, which is codified in Section 31-53b of the Connecticut General Statutes;

(2) The course, program or training is required for public works contracts as described by Conn. Gen. Stat. § 31-53(g) entered into on or after July 1, 2009;

(3) It is required of private workers (not state or municipal workers) and apprentices who perform the work of a mechanic, laborer or worker pursuant to the classifications of labor under Conn. Gen. Stat. § 31-53 on a public works project as described by Conn. Gen. Stat. § 31-53(g);

(4) The ten-hour construction safety and health course, program or training pertains to the ten-hour Outreach Course conducted in accordance with federal OSHA Training Institute standards, a new mining training program approved by the Federal Mine Safety and Health Administration in accordance with 30 C.F. R. 48, or, for telecommunications workers, a ten-hour training course conducted in accordance with federal OSHA standard, 29 CFR 1910.268;

(5) The internet website for the federal OSHA Training Institute is http://www.osha.gov/fso/ote/training/edcenters/fact_sheet.html;

(6) The statutory language leaves it to the contractor and its employees to determine who pays for the cost of the ten-hour Outreach Course;

(7) Proof of course, program or training completion shall be demonstrated through the presentation of a "completion document" (card, document, certificate or other written record issued by federal OSHA or by the Federal Mine Safety and Health Administration) as defined by Conn. State Agencies Regs. § 31-53b-1(2).

(8) Any completion document with an issuance date more than 5 years prior to the commencement date of the public works project shall not constitute proof of compliance with § 31-53b;

(9) For each person who performs the duties of a mechanic, laborer or worker on a public works project, the contractor shall affix a copy of the completion document

to the certified payroll required to be submitted to the contracting agency for such project on which such worker's name first appears;

(10) Any mechanic, laborer or worker on a public works project found to be in non-compliance shall be subject to removal from the project if such employee does not provide satisfactory proof of course completion to the Labor Commissioner by the fifteenth day after the date the employee is determined to be in noncompliance;

(11) Any such employee who is determined to be in noncompliance may continue to work on a public works project for a maximum of fourteen consecutive calendar days while bringing his or her status into compliance;

(12) The statute provides the minimum standards required for the completion of a construction safety and health course, program or training by employees on public works contracts; any contractor can exceed these minimum requirements.;

(13) Regulations pertaining to § 31-53b are located at Conn. State Agencies Regs. §31-53b-1 *et seq.*, and are effective May 5, 2009. The regulations are posted on the CTDOL website;

(14) Any questions regarding this statute or the regulations may be directed to the Wage and Workplace Standards Division of the Connecticut Labor Department via the internet website of http://www.ctdol.state.ct.us/wgwkstnd/wgemenu.htm; or by telephone at (860)263-6790.

THE ABOVE INFORMATION IS PROVIDED EXCLUSIVELY AS AN EDUCATIONAL RESOURCE, AND IS NOT INTENDED AS A SUBSTITUTE FOR LEGAL INTERPRETATIONS WHICH MAY ULTMATELY ARISE CONCERNING THE CONSTRUCTION OF THE STATUTE OR THE REGULATIONS.

November 29, 2006

Notice

To All Mason Contractors and Interested Parties Regarding Construction Pursuant to Section 31-53 of the Connecticut General Statutes (Prevailing Wage)

The Connecticut Labor Department Wage and Workplace Standards Division is empowered to enforce the prevailing wage rates on projects covered by the above referenced statute.
Over the past few years the Division has withheld enforcement of the rate in effect for workers who operate a forklift on a prevailing wage rate project due to a potential jurisdictional dispute. The rate listed in the schedules and in our Occupational Bulletin (see enclosed) has been as follows:

Forklift Operator:

- Laborers (Group 4) Mason Tenders - operates forklift solely to assist a mason to a maximum height of nine feet only.

- Power Equipment Operator (Group 9) - operates forklift to assist any trade and to assist a mason to a height over nine feet.

The U.S. Labor Department conducted a survey of rates in Connecticut but it has not been published and the rate in effect remains as outlined in the above Occupational Bulletin.

Since this is a classification matter and not one of jurisdiction, effective January 1, 2007 the Connecticut Labor Department will enforce the rate on each schedule in accordance with our statutory authority.

Your cooperation in filing appropriate and accurate certified payrolls is appreciated.

STATUTE 31-55a

- SPECIAL NOTICE -

To: All State and Political Subdivisions,Their Agents, and Contractors
Connecticut General Statute 31-55a - Annual adjustments to wage rates by contractors doing state work.

Each contractor that is awarded a contract on or after October 1, 2002, for (1) the construction of a state highway or bridge that falls under the provisions of section 31-54 of the general statutes, or (2) the construction, remodeling, refinishing, refurbishing, rehabilitation, alteration or repair of any public works project that falls under the provisions of section 31-53 of the general statutes shall contact the Labor Commissioner on or before July first of each year, for the duration of such contract, to ascertain the prevailing rate of wages on an hourly basis and the amount of payment or contributions paid or payable on behalf of each mechanic, laborer or worker employed upon the work contracted to be done, and shall make any necessary adjustments to such prevailing rate of wages and such payment or contributions paid or payable on behalf of each such employee, effective each July first.

- The prevailing wage rates applicable to any contract or subcontract awarded on or after October 1, 2002 are subject to annual adjustments each July 1st for the duration of any project which was originally advertised for bids on or after October 1, 2002.

- Each contractor affected by the above requirement shall pay the annual adjusted prevailing wage rate that is in effect each July 1st, as posted by the Department of Labor.

- It is the ***contractor's*** responsibility to obtain the annual adjusted prevailing wage rate increases directly from the Department of Labor's Web Site. The annual adjustments will be posted on the Department of Labor Web page: www.ctdol.state.ct.us. For those without internet access, please contact the division listed below.

- The Department of Labor will continue to issue the initial prevailing wage rate schedule to the Contracting Agency for the project. All subsequent annual adjustments will be posted on our Web Site for contractor access.

Any questions should be directed to the Contract Compliance Unit, Wage and Workplace Standards Division, Connecticut Department of Labor, 200 Folly Brook Blvd., Wethersfield, CT 06109 at (860)263-6790.

~NOTICE~

TO ALL CONTRACTING AGENCIES

Please be advised that Connecticut General Statutes Section 31-53, requires the contracting agency to certify to the Department of Labor, the total dollar amount of work to be done in connection with such public works project, regardless of whether such project consists of one or more contracts.

Please find the attached "Contracting Agency Certification Form" to be completed and returned to the Department of Labor, Wage and Workplace Standards Division, Public Contract Compliance Unit.

✎ Inquiries can be directed to (860)263-6543.

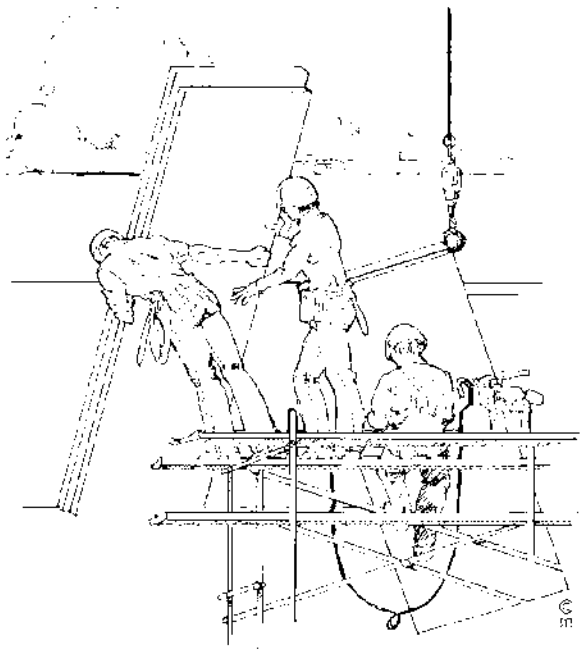

CONNECTICUT DEPARTMENT OF LABOR
WAGE AND WORKPLACE STANDARDS DIVISION
CONTRACT COMPLIANCE UNIT

CONTRACTING AGENCY CERTIFICATION FORM

I, _____, acting in my official capacity as _____,
authorized representative title

for _____, located at _____,
contracting agency address

do hereby certify that the total dollar amount of work to be done in connection with

_____, located at _____,
project name and number address

shall be $_____, which includes all work, regardless of whether such project

consists of one or more contracts.

CONTRACTOR INFORMATION

Name:_____

Address:_____
Authorized Representative:_____
Approximate Starting Date: _____

Approximate Completion Date:_____

_____ _____
Signature Date

Return To: Connecticut Department of Labor
Wage & Workplace Standards Division
Contract Compliance Unit
200 Folly Brook Blvd.
Wethersfield, CT 06109

Date Issued: _____

CONNECTICUT DEPARTMENT OF LABOR
WAGE AND WORKPLACE STANDARDS DIVISION

CONTRACTORS WAGE CERTIFICATION FORM

Construction Manager at Risk/General Contractor/Prime Contractor

I,_____ of _____
Officer, Owner, Authorized Rep. Company Name

do hereby certify that the _____
Company Name

_____
Street

_____
City

and all of its subcontractors will pay all workers on the

_____
Project Name and Number

_____
Street and City

the wages as listed in the schedule of prevailing rates required for such project (a copy of which is attached hereto).

_____
Signed

Subscribed and sworn to before me this _____ day of _____,_____.

_____
Notary Public

Return to:

Connecticut Department of Labor
Wage & Workplace Standards Division
200 Folly Brook Blvd.
Wethersfield, CT 06109

Rate Schedule Issued (Date): _____

CERTIFIED PAYROLL FORM WWS - CPI

In accordance with Connecticut General Statutes, 31-53 Certified Payrolls with a statement of compliance shall be submitted monthly to the contracting agency.

Note: Once you have downloaded these forms and are ready to print them out, set the print function on your PC to the horizontal print orientation.

Note2: Please download both the Payroll Certification for Public Works Projects **and** the Certified Statement of Compliance for a complete package. The Certified Statement of Compliance appears on the same page as the Fringe Benefits Explanation page.

Announcement: The Certified Payroll Form WWS-CPI can now be completed on-line!

- Certified Payroll Form WWS-CPI (PDF, 727KB)
- Sample Completed Form (PDF, 101KB)

[New] In accordance with Section 31-53b(a) of the C.G.S. each contractor shall provide a copy of the OSHA 10 Hour Construction Safety and Health Card for each employee, to be attached to the first certified payroll on the project.

In accordance with Connecticut General Statutes, 31-53
Certified Payrolls with a statement of compliance
shall be submitted monthly to the contracting agency.

PAYROLL CERTIFICATION FOR PUBLIC WORKS PROJECTS

WEEKLY PAYROLL

Connecticut Department of Labor
Wage and Workplace Standards Division
200 Folly Brook Blvd.
Wethersfield, CT 06109

CONTRACTOR NAME AND ADDRESS:

SUBCONTRACTOR NAME & ADDRESS

WORKER'S COMPENSATION INSURANCE CARRIER

POLICY #

EFFECTIVE DATE:
EXPIRATION DATE:

PAYROLL NUMBER | Week-Ending Date | PROJECT NAME & ADDRESS

PERSON/WORKER, ADDRESS and SECTION	APPR RATE %	MALE/ FEMALE AND RACE*	WORK CLASSIFICATION Trade License Type & Number - OSHA 10 Certification Number	DAY AND DATE S	M	T	W	TH	F	S	Total ST Hours Total O/T Hours	BASE HOURLY RATE TOTAL FRINGE BENEFIT PLAN CASH	TYPE OF FRINGE BENEFITS Per Hour 1 through 6 (see back)	GROSS PAY FOR ALL WORK PERFORMED THIS WEEK	TOTAL DEDUCTIONS FICA	FEDERAL WITH-HOLDING	STATE WITH-HOLDING	LIST OTHER	GROSS PAY FOR THIS PREVAILING RATE JOB	CHECK # AND NET PAY
				HOURS WORKED EACH DAY								$ Base Rate $ Cash Fringe	1. $ 2. $ 3. $ 4. $ 5. $ 6. $							
												$ Base Rate $ Cash Fringe	1. $ 2. $ 3. $ 4. $ 5. $ 6. $							
												$ Base Rate $ Cash Fringe	1. $ 2. $ 3. $ 4. $ 5. $ 6. $							
												$ Base Rate $ Cash Fringe	1. $ 2. $ 3. $ 4. $ 5. $ 6. $							

12/9/2013
WWS-CP1

*IF REQUIRED

*SEE REVERSE SIDE

PAGE NUMBER _____OF

OSHA 10 ~ATTACH CARD TO 1ST CERTIFIED PAYROLL

***FRINGE BENEFITS EXPLANATION (P):**

Bona fide benefits paid to approved plans, funds or programs, except those required by Federal or State Law (unemployment tax, worker's compensation, income taxes, etc.).

Please specify the type of benefits provided:

1) Medical or hospital care _____ 4) Disability_____

2) Pension or retirement _____ 5) Vacation, holiday_____

3) Life Insurance _____ 6) Other (please specify) _____

CERTIFIED STATEMENT OF COMPLIANCE

For the week ending date of _____,

I, _____of _____, (hereafter known as

Employer) in my capacity as _____ (title) do hereby certify and state:

Section A:

1. All persons employed on said project have been paid the full weekly wages earned by them during the week in accordance with Connecticut General Statutes, section 31-53, as amended. Further, I hereby certify and state the following:

a) The records submitted are true and accurate;

b) The rate of wages paid to each mechanic, laborer or workman and the amount of payment or contributions paid or payable on behalf of each such person to any employee welfare fund, as defined in Connecticut General Statutes, section 31-53 (h), are not less than the prevailing rate of wages and the amount of payment or contributions paid or payable on behalf of each such person to any employee welfare fund, as determined by the Labor Commissioner pursuant to subsection Connecticut General Statutes, section 31-53 (d), and said wages and benefits are not less than those which may also be required by contract;

c) The Employer has complied with all of the provisions in Connecticut General Statutes, section 31-53 (and Section 31-54 if applicable for state highway construction);

d) Each such person is covered by a worker's compensation insurance policy for the duration of his employment which proof of coverage has been provided to the contracting agency;

e) The Employer does not receive kickbacks, which means any money, fee, commission, credit, gift, gratuity, thing of value, or compensation of any kind which is provided directly or indirectly, to any prime contractor, prime contractor employee, subcontractor, or subcontractor employee for the purpose of improperly obtaining or rewarding favorable treatment in connection with a prime contract or in connection with a prime contractor in connection with a subcontractor relating to a prime contractor; and

f) The Employer is aware that filing a certified payroll which he knows to be false is a class D felony for which the employer may be fined up to five thousand dollars, imprisoned for up to five years or both.

2. OSHA~The employer shall affix a copy of the construction safety course, program or training completion document to the certified payroll required to be submitted to the contracting agency for this project on which such persons name first appears.

_____ _____ _____

(Signature) (Title) Submitted on (Date)

*****THIS IS A PUBLIC DOCUMENT*****
*****DO NOT INCLUDE SOCIAL SECURITY NUMBERS*****

Weekly Payroll Certification For Public Works Projects (Continued)

PAYROLL CERTIFICATION FOR PUBLIC WORKS PROJECTS

Week-Ending Date:

Contractor or Subcontractor Business Name:

WEEKLY PAYROLL

PERSON/WORKER, ADDRESS and SECTION	APPR RATE %	MALE/ FEMALE AND RACE*	WORK CLASSIFICATION Trade License Type & Number - OSHA 10 Certification Number	DAY AND DATE S	M	T	W	TH	F	S HOURS WORKED EACH DAY	Total ST Hours Total O/T Hours	BASE HOURLY RATE TOTAL FRINGE BENEFIT PLAN CASH	TYPE OF FRINGE BENEFITS Per Hour 1 through 6 (see back)	GROSS PAY FOR ALL WORK PERFORMED THIS WEEK	TOTAL DEDUCTIONS FICA	FEDERAL WITH-HOLDING	STATE WITH-HOLDING	LIST OTHER	GROSS PAY FOR THIS PREVAILING RATE JOB	CHECK # AND NET PAY
												$ Base Rate $ Cash Fringe	1. $ 2. $ 3. $ 4. $ 5. $ 6. $							
												$ Base Rate $ Cash Fringe	1. $ 2. $ 3. $ 4. $ 5. $ 6. $							
												$ Base Rate $ Cash Fringe	1. $ 2. $ 3. $ 4. $ 5. $ 6. $							
												$ Base Rate $ Cash Fringe	1. $ 2. $ 3. $ 4. $ 5. $ 6. $							
												$ Base Rate $ Cash Fringe	1. $ 2. $ 3. $ 4. $ 5. $ 6. $							

*IF REQUIRED

OCCUPATIONAL CLASSIFICATION BULLETIN

The Connecticut Department of Labor has the responsibility to properly determine "job classification" on prevailing wage projects covered under C.G.S. Section 31-53.

Note: This information is intended to provide a sample of some occupational classifications for guidance purposes only. It is not an all-inclusive list of each occupation's duties. This list is being provided only to highlight some areas where a contractor may be unclear regarding the proper classification.

Below are additional clarifications of specific job duties performed for certain classifications:

- **ASBESTOS WORKERS**
  - Applies all insulating materials, protective coverings, coatings and finishes to all types of mechanical systems.
- **ASBESTOS INSULATOR**
  - Handle, install apply, fabricate, distribute, prepare, alter, repair, dismantle, heat and frost insulation, including penetration and fire stopping work on all penetration fire stop systems.
- **BOILERMAKERS**
  - Erects hydro plants, incomplete vessels, steel stacks, storage tanks for water, fuel, etc. Builds incomplete boilers, repairs heat exchanges and steam generators.
- **BRICKLAYERS, CEMENT MASONS, CEMENT FINISHERS, MARBLE MASONS, PLASTERERS, STONE MASONS, PLASTERERS. STONE MASONS, TERRAZZO WORKERS, TILE SETTERS**
  - Lays building materials such as brick, structural tile and concrete cinder, glass, gypsum, terra cotta block. Cuts, tools and sets marble, sets stone, finishes concrete, applies decorative steel, aluminum and plastic tile, applies cements, sand, pigment and marble chips to floors, stairways, etc.
- **CARPENTERS, MILLWRIGHTS. PILEDRIVERMEN. LATHERS. RESILEINT FLOOR LAYERS, DOCK BUILDERS, DIKERS, DIVER TENDERS**
  - Constructs, erects, installs and repairs structures and fixtures of wood, plywood and wallboard. Installs, assembles, dismantles, moves industrial machinery. Drives piling into ground to provide foundations for structures such as buildings and bridges, retaining walls for earth embankments, such as cofferdams. Fastens wooden, metal or rockboard lath to walls, ceilings and partitions of buildings, acoustical tile layer, concrete form builder. Applies firestopping materials on fire resistive joint systems only. Installation of curtain/window walls only where attached to wood or metal studs. Installation

of insulated material of all types whether blown, nailed or attached in other ways to walls, ceilings and floors of buildings. Assembly and installation of modular furniture/furniture systems. Free-standing furniture is not covered. This includes free standing: student chairs, study top desks, book box desks, computer furniture, dictionary stand, atlas stand, wood shelving, two-position information access station, file cabinets, storage cabinets, tables, etc.

- **CLEANING LABORER**

  - The clean up of any construction debris and the general cleaning, including sweeping, wash down, mopping, wiping of the construction facility, washing, polishing, dusting, etc., prior to the issuance of a certificate of occupancy falls under the *Labor classification.*

- **DELIVERY PERSONNEL**

  - If delivery of supplies/building materials is to one common point and stockpiled there, prevailing wages are not required. If the delivery personnel are involved in the distribution of the material to multiple locations within the construction site then they would have to be paid prevailing wages for the type of work performed: laborer, equipment operator, electrician, ironworker, plumber, etc.

  - An example of this would be where delivery of drywall is made to a building and the delivery personnel distribute the drywall from one "stockpile" location to further sub-locations on each floor. Distribution of material around a construction site is the job of a laborer/tradesman and not a delivery personnel.

- **ELECTRICIANS**

  - Install, erect, maintenance, alteration or repair of any wire, cable, conduit, etc., which generates, transforms, transmits or uses electrical energy for light, heat, power or other purposes, including the Installation or maintenance of telecommunication, LAN wiring or computer equipment, and low voltage wiring. ***License required per Connecticut General Statutes: E-1,2 L-5,6 C-5,6 T-1,2 L-1,2 V-1,2,7,8,9.**

- **ELEVATOR CONSTRUCTORS**

  - Install, erect, maintenance and repair of all types of elevators, escalators, dumb waiters and moving walks. ***License required by Connecticut General Statutes: R-1,2,5,6.**

- **FORK LIFT OPERATOR**

  - Laborers Group 4) Mason Tenders - operates forklift solely to assist a mason to a maximum height of nine (9) feet only.

  - Power Equipment Operator Group 9 - operates forklift to assist any trade, and to assist a mason to a height over nine (9) feet.

- **GLAZIERS**

  - Glazing wood and metal sash, doors, partitions, and 2 story aluminum

storefronts. Installs glass windows, skylights, store fronts and display cases or surfaces such as building fronts, interior walls, ceilings and table tops and metal store fronts. Installation of aluminum window walls and curtain walls is the "joint" work of glaziers and ironworkers which requires either a blended rate or equal composite workforce.

- **IRONWORKERS**
  - Erection, installation and placement of structural steel, precast concrete, miscellaneous iron, ornamental iron, metal curtain wall, rigging and reinforcing steel. Handling, sorting, and installation of reinforcing steel (rebar). Metal bridge rail (traffic), metal bridge handrail, and decorative security fence installation. Installation of aluminum window walls and curtain walls is the "joint" work of glaziers and ironworkers which requires either a blended rate or equal composite workforce. Insulated metal and insulated composite panels are still installed by the Ironworker.
- **INSULATOR**
  - Installing fire stopping systems/materials for "Penetration Firestop Systems": transit to cables, electrical conduits, insulated pipes, sprinkler pipe penetrations, ductwork behind radiation, electrical cable trays, fire rated pipe penetrations, natural polypropylene, HVAC ducts, plumbing bare metal, telephone and communication wires, and boiler room ceilings. Past practice using the applicable licensed trades, Plumber, Sheet Metal, Sprinkler Fitter, and Electrician, is not inconsistent with the Insulator classification and would be permitted.
- **LABORERS**
  - Acetylene burners, asphalt rakers, chain saw operators, concrete and power buggy operator, concrete saw operator, fence and guard rail erector (except metal bridge rail (traffic), metal bridge handrail, and decorative security fence installation.), hand operated concrete vibrator operator, mason tenders, pipelayers (installation of storm drainage or sewage lines on the street only), pneumatic drill operator, pneumatic gas and electric drill operator, powermen and wagon drill operator, air track operator, block paver, curb setters, blasters, concrete spreaders.
- **PAINTERS**
  - Maintenance, preparation, cleaning, blasting (water and sand, etc.), painting or application of any protective coatings of every description on all bridges and appurtenances of highways, roadways, and railroads. Painting, decorating, hardwood finishing, paper hanging, sign writing, scenic art work and drywall hanging+ for any and all types of building and residential work.
- **LEAD PAINT REMOVAL**
  - Painter’s Rate

1. Removal of lead paint from bridges.

2. Removal of lead paint as preparation of any surface to be repainted.

3. Where removal is on a Demolition project prior to reconstruction.

- Laborer's Rate

1. Removal of lead paint from any surface NOT to be repainted.

2. Where removal is on a *TOTAL* Demolition project only.

- **PLUMBERS AND PIPEFITTERS**

  - Installation, repair, replacement, alteration or maintenance of all plumbing, heating, cooling and piping. ***License required per Connecticut General Statutes: P-1,2,6,7,8,9 J-1,2,3,4 SP-1,2 S-1,2,3,4,5,6,7,8 B-1,2,3,4 D-1,2,3,4.***

- **POWER EQUIPMENT OPERATORS**

  - ates several types of power construction equipment such as compressors, pumps, hoists, derricks, cranes, shovels, tractors, scrapers or motor graders, etc. Repairs and maintains equipment. ***License required, crane operators only, per Connecticut General Statutes.**

- **ROOFERS**

  - Covers roofs with composition shingles or sheets, wood shingles, slate or asphalt and gravel to waterproof roofs, including preparation of surface. (tear-off and/or removal of any type of roofing and/or clean-up of any and all areas where a roof is to be relaid)

- **SHEETMETAL WORKERS**

  - Fabricate, assembles, installs and repairs sheetmetal products and equipment in such areas as ventilation, air-conditioning, warm air heating, restaurant equipment, architectural sheet metal work, sheetmetal roofing, and aluminum gutters. Fabrication, handling, assembling, erecting, altering, repairing, etc. of coated metal material panels and composite metal material panels when used on building exteriors and interiors as soffits, facia, louvers, partitions, wall panel siding, canopies, cornice, column covers, awnings, beam covers, cladding, sun shades, lighting troughs, spires, ornamental roofing, metal ceilings, mansards, copings, ornamental and ventilation hoods, vertical and horizontal siding panels, trim, etc. The sheet metal classification also applies to the vast variety of coated metal material panels and composite metal material panels that have evolved over the years as an alternative to conventional ferrous and non-ferrous metals like steel, iron, tin, copper, brass, bronze, aluminum, etc. Insulated metal and insulated composite panels are still installed by the Iron Worker. Fabrication, handling, assembling, erecting, altering, repairing, etc. of architectural metal roof, standing seam roof, composite metal roof, metal and composite bathroom/toilet partitions, aluminum gutters, metal

and composite lockers and shelving, kitchen equipment, and walk-in coolers.

- **SPRINKLER FITTERS**

  - Installation, alteration, maintenance and repair of fire protection sprinkler systems. ***License required per Connecticut General Statutes: F-1,2,3,4.**

- **TILE MARBLE AND TERRAZZO FINISHERS**

  - Assists and tends the tile setter, marble mason and terrazzo worker in the performance of their duties.

- **TRUCK DRIVERS**

  - **Definitions:**

    - 1) "Site of the work" (29 Code of Federal Regulations (CFR) 5.2(l)(b) is the physical place or places where the building or work called for in the contract will remain and any other site where a significant portion of the building or work is constructed, provided that such site is established specifically for the performance of the contact or project;

      - (a) Except as provided in paragraph (l) (3) of this section, job headquarters, tool yards, batch plants, borrow pits, etc. are part of the "site of the work"; provided they are dedicated exclusively, or nearly so, to the performance of the contract or project, and provided they are adjacent to "the site of work" as defined in paragraph (e)(1) of this section;

      - (b) Not included in the "site of the work" are permanent home offices, branch plant establishments, fabrication plants, tool yards etc, of a contractor or subcontractor whose location and continuance in operation are determined wholly without regard to a particular State or political subdivision contract or uncertain and indefinite periods of time involved of a few seconds or minutes duration and where the failure to count such time is due to consideration justified by industrial realities (29 CFR 785.47)

    - 2) "Engaged to wait" is waiting time that belongs to and is controlled by the employer which is an integral part of the job and is therefore compensable as hours worked. (29 CFR 785.15)

    - 3) "Waiting to be engaged" is waiting time that an employee can use effectively for their own purpose and is not compensable as hours worked. (29 CFR 785.16)

    - 4) "De Minimus" is a rule that recognizes that unsubstantial or insignificant periods of time which cannot as a practical administrative matter be precisely recorded for payroll purposes, may be disregarded. This rule applies only where there are uncertain and indefinite periods of time involved of a short duration and where the failure to count such

time is due to consideration justified by worksite realities. For example, with respect to truck drivers on prevailing wage sites, this is typically less than 15 minutes at a time.

- **Coverage of Truck Drivers on State or Political subdivision Prevailing Wage Projects**

  - Truck drivers **are covered** for payroll purposes under the following conditions:

    - Truck Drivers for time spent working on the site of the work.

    - Truck Drivers for time spent loading and/or unloading materials and supplies on the site of the work, if such time is not de minimus

    - Truck drivers transporting materials or supplies between a facility that is deemed part of the site of the work and the actual construction site.

    - Truck drivers transporting portions of the building or work between a site established specifically for the performance of the contract or project where a significant portion of such building or work is constructed and the physical places where the building or work outlined in the contract will remain.

  For example: Truck drivers delivering asphalt are covered under prevailing wage while" engaged to wait" on the site and when directly involved in the paving operation, provided the total time is not "de minimus"

  - Truck Drivers **are not** covered in the following instances:

    - Material delivery truck drivers while off "the site of the work"

    - Truck Drivers traveling between a prevailing wage job and a commercial supply facility while they are off the "site of the work"

    - Truck drivers whose time spent on the "site of the work" is de minimus, such as under 15 minutes at a time, merely to drop off materials or supplies, including asphalt.

These guidelines are similar to U.S. Labor Department policies. The application of these guidelines may be subject to review based on factual considerations on a case by case basis.

For example:

- Material men and deliverymen are not covered under

prevailing wage as long as they are not directly involved in the construction process. If, they unload the material, they would then be covered by prevailing wage for the classification they are performing work in: laborer, equipment operator, etc.

- Hauling material off site is not covered provided they are not dumping it at a location outlined above.
- Driving a truck on site and moving equipment or materials on site would be considered covered work, as this is part of the construction process.

Any questions regarding the proper classification should be directed to:

Public Contract Compliance Unit
Wage and Workplace Standards Division
Connecticut Department of Labor
200 Folly Brook Blvd, Wethersfield, CT 06109
(860) 263-6543

Rev. 07/13

Connecticut Department of Labor
Wage and Workplace Standards Division
FOOTNOTES

Please Note: If the "Benefits" listed on the schedule for the following occupations includes a letter(s) (+ a or + a+b for instance), refer to the information below.

- Benefits to be paid at the appropriate prevailing wage rate for the listed occupation.

- If the "Benefits" section for the occupation lists only a dollar amount, disregard the information below.

Bricklayers, Cement Masons, Cement Finishers, Concrete Finishers, Stone Masons
(Building Construction) and (Residential- Hartford, Middlesex, New Haven, New London and Tolland Counties)

a. Paid Holiday: Employees shall receive 4 hours for Christmas Eve holiday provided the employee works the regularly scheduled day before and after the holiday. Employers may schedule work on Christmas Eve and employees shall receive pay for actual hours worked in addition to holiday pay.

Elevator Constructors: Mechanics
a. Paid Holidays: New Year's Day, Memorial Day, Independence Day, Labor Day, Veterans' Day, Thanksgiving Day, Christmas Day, plus the Friday after Thanksgiving.

b. Vacation: Employer contributes 8% of basic hourly rate for 5 years or more of service or 6% of basic hourly rate for 6 months to 5 years of service as vacation pay credit.

Glaziers
a. Paid Holidays: Labor Day and Christmas Day.

Power Equipment Operators
(Heavy and Highway Construction & Building Construction)

a. Paid Holidays: New Year's Day, Good Friday, Memorial day, Independence Day, Labor Day, Thanksgiving Day and Christmas Day, provided the employee works 3 days during the week in which the holiday falls, if scheduled, and if scheduled, the working day before and the working day after the holiday. Holidays falling on Saturday may be observed on Saturday, or if the employer so elects, on the preceding Friday.

Ironworkers

a. Paid Holiday: Labor Day provided employee has been on the payroll for the 5 consecutive work days prior to Labor Day.

Laborers (Tunnel Construction)

a. Paid Holidays: New Year's Day, Memorial Day, Independence Day, Labor Day, Thanksgiving Day and Christmas Day. No employee shall be eligible for holiday pay when he fails, without cause, to work the regular work day preceding the holiday or the regular work day following the holiday.

Roofers

a. Paid Holidays: July 4th, Labor Day, and Christmas Day provided the employee is employed 15 days prior to the holiday.

Sprinkler Fitters

a. Paid Holidays: Memorial Day, July 4th, Labor Day, Thanksgiving Day and Christmas Day, provided the employee has been in the employment of a contractor 20 working days prior to any such paid holiday.

Truck Drivers

(Heavy and Highway Construction & Building Construction)

a. Paid Holidays: New Year's Day, Memorial Day, Independence Day, Labor Day, Thanksgiving Day, Christmas day, and Good Friday, provided the employee has at least 31 calendar days of service and works the last scheduled day before and the first scheduled day after the holiday, unless excused.

TEMPLATE

AIA® Document A101™ – 2017

Standard Form of Agreement Between Owner and Contractor
where the basis of payment is a Stipulated Sum

Editing Template
CAUTION: Take care not to remove or otherwise edit Project Data fill-point areas (Basic Information, Contract Details and Project Team) when making edits to this document.

ADDITIONS AND DELETIONS: The author of this document has added information needed for its completion. The author may also have revised the text of the original AIA standard form. An *Additions and Deletions Report* that notes added information as well as revisions to the standard form text is available from the author and should be reviewed.

This document has important legal consequences. Consultation with an attorney is encouraged with respect to its completion or modification.

ELECTRONIC COPYING of any portion of this AIA® Document to another electronic file is prohibited and constitutes a violation of copyright laws as set forth in the footer of this document.

AIA A101-2017 FOR GC PROJECT
FINAL 10/31/18 rev. 11/28/18

AGREEMENT made and effective as of the date that the Agreement is fully executed by the parties hereto« »
(In words, indicate day, month and year.)

BETWEEN the Owner:
(Name, address and other information)

« »« »
« »
« »
« »

and the Contractor:
(Name, address and other information)

« »« »
« »
« »
« »

for the following Project:
(Name, location and description)

« »
« »
« »

The Architect:
(Name, address and other information)

« »« »
« »
« »
« »

The Owner and Contractor agree as follows.

AIA Document A101™ – 2017. Copyright © 1915, 1918, 1925, 1937, 1951, 1958, 1961, 1963, 1967, 1974, 1977, 1987, 1991, 1997, 2007 and 2017 by The American Institute of Architects. **All rights reserved. WARNING: This AIA® Document is protected by U.S. Copyright Law and International Treaties. Unauthorized reproduction or distribution of this AIA® Document, or any portion of it, may result in severe civil and criminal penalties, and will be prosecuted to the maximum extent possible under the law.**
This document is not an original AIA® Contract Document, but a template produced by AIA® Contract Documents software for producing a customized document.

TEMPLATE

AIA Document A101™ – 2017. Copyright © 1915, 1918, 1925, 1937, 1951, 1958, 1961, 1963, 1967, 1974, 1977, 1987, 1991, 1997, 2007 and 2017 by The American Institute of Architects. **All rights reserved**. **WARNING: This AIA® Document is protected by U.S. Copyright Law and International Treaties. Unauthorized reproduction or distribution of this AIA® Document, or any portion of it, may result in severe civil and criminal penalties, and will be prosecuted to the maximum extent possible under the law.**
This document is not an original AIA® Contract Document, but a template produced by AIA® Contract Documents software for producing a customized document.

TABLE OF ARTICLES

1 THE CONTRACT DOCUMENTS

2 THE WORK OF THIS CONTRACT

3 DATE OF COMMENCEMENT AND SUBSTANTIAL COMPLETION

4 CONTRACT SUM

5 PAYMENTS

6 DISPUTE RESOLUTION

7 TERMINATION OR SUSPENSION

8 MISCELLANEOUS PROVISIONS

9 ENUMERATION OF CONTRACT DOCUMENTS

EXHIBIT A INSURANCE AND BONDS

ARTICLE 1 THE CONTRACT DOCUMENTS

The Contract Documents consist of this Agreement, the AIA A201-2017 General Conditions, as modified by the Owner prior to the execution of this Agreement (as so modified, the "General Conditions"), Drawings, Specifications, Addenda issued prior to execution of this Agreement, other documents listed in this Agreement, and Modifications issued after execution of this Agreement, all of which form the Contract, and are as fully a part of the Contract as if attached to this Agreement or repeated herein. The Contract represents the entire and integrated agreement between the parties hereto and supersedes prior negotiations, representations, or agreements, either written or oral. An enumeration of the Contract Documents, other than a Modification, appears in Article 9.

ARTICLE 2 THE WORK OF THIS CONTRACT

§ 2.1 The Contractor shall fully execute the Work described in the Contract Documents, except as specifically indicated in the Contract Documents to be the responsibility of others.

ARTICLE 3 DATE OF COMMENCEMENT AND SUBSTANTIAL COMPLETION

§ 3.1 The date of commencement of the Work shall be:
(Check one of the following boxes.)

[« »] The date of this Agreement.

[« X »] A date set forth in a notice to proceed issued by the Owner.

[« »] Established as follows:
(Insert a date or a means to determine the date of commencement of the Work.)

§ 3.2 The Contract Time shall be measured from the date of commencement of the Work.

§ 3.3 Substantial Completion

§ 3.3.1 Subject to adjustments of the Contract Time as provided in the Contract Documents, the Contractor shall achieve Substantial Completion of the entire Work:
(Check one of the following boxes and complete the necessary information.)

[« »] Not later than « » (« ») days from the date of commencement of the Work.

[« »] By the following date: « »

AIA Document A101™ – 2017. Copyright © 1915, 1918, 1925, 1937, 1951, 1958, 1961, 1963, 1967, 1974, 1977, 1987, 1991, 1997, 2007 and 2017 by The American Institute of Architects. **All rights reserved.** **WARNING: This AIA® Document is protected by U.S. Copyright Law and International Treaties. Unauthorized reproduction or distribution of this AIA® Document, or any portion of it, may result in severe civil and criminal penalties, and will be prosecuted to the maximum extent possible under the law.**
This document is not an original AIA® Contract Document, but a template produced by AIA® Contract Documents software for producing a customized document.

In addition to the foregoing, the Work shall be performed in general conformance with the preliminary construction schedule attached hereto as Exhibit D. Upon the Owner's approval of the construction schedule to be submitted by the Contractor pursuant to the requirements set forth in Section 3.10.1 of the General Conditions, such preliminary construction schedule shall be superseded and replaced by such approved construction schedule.

§ 3.3.2 Subject to adjustments of the Contract Time as provided in the Contract Documents, if portions of the Work are to be completed prior to Substantial Completion of the entire Work, the Contractor shall achieve Substantial Completion of such portions by the following dates:

Portion of Work	Substantial Completion Date

§ 3.3.3 If the Contractor fails to achieve Substantial Completion as provided in this Section 3.3, liquidated damages, if any, shall be assessed as set forth in Section 4.5.

ARTICLE 4 CONTRACT SUM

§ 4.1 The Owner shall pay the Contractor the Contract Sum in current funds for the Contractor's performance of the Contract. The Contract Sum shall be « » ($ « »), subject to additions and deductions as provided in the Contract Documents.

§ 4.2.1 The Contract Sum is based upon and includes the following alternates, if any, which are further described in the Contract Documents and are hereby accepted by the Owner.

All alternate prices set forth in this Section 4.2.1 and in Section 4.2.2 below are "All-Inclusive Prices". For the purposes of this Agreement an "All Inclusive Price" is a price for a portion of the Work which represents the total cost to the Owner for the Contractor's performance, furnishing and installation of such portion of the Work including, without limitation, overhead and profit thereon. Alternate prices are good for both adds and deducts.

§ 4.2.2 Subject to the conditions noted below, the following alternates may be accepted by the Owner following execution of this Agreement. Upon acceptance, the Owner shall issue a Modification to this Agreement.

(Insert below each alternate and the conditions that must be met for the Owner to accept the alternate.)

Item	Price	Conditions for Acceptance

§ 4.3 Allowances, if any, included in the Contract Sum:

(Identify each allowance.)

Item	Price

§ 4.4 Unit prices applicable to the Work, if any, are set forth below (the "Unit Prices").

Unit Prices shall be valid for the life of the Project and represent All-Inclusive Prices. Unit prices are good for both adds and deducts.

Item	Units and Limitations	Price per Unit ($0.00)

§ 4.5 **Liquidated Damages**:

AIA Document A101™ – 2017. Copyright © 1915, 1918, 1925, 1937, 1951, 1958, 1961, 1963, 1967, 1974, 1977, 1987, 1991, 1997, 2007 and 2017 by The American Institute of Architects. **All rights reserved.** WARNING: This AIA® Document is protected by U.S. Copyright Law and International Treaties. Unauthorized reproduction or distribution of this AIA® Document, or any portion of it, may result in severe civil and criminal penalties, and will be prosecuted to the maximum extent possible under the law.
This document is not an original AIA® Contract Document, but a template produced by AIA® Contract Documents software for producing a customized document.

It is acknowledged that the Contractor's failure to achieve Substantial Completion of the Work within the Contract Time provided by the Contract Documents will cause the Owner to incur substantial economic damages and losses of types and in amounts which are impossible to compute and ascertain with certainty as a basis for recovery by the Owner of actual damages, and that liquidated damages represent a fair, reasonable and appropriate estimate thereof. Accordingly, in lieu of actual damages for such delay, the Contractor agrees that liquidated damages may be assessed and recovered by the Owner as against the Contractor and its Surety in the event of delayed completion, without the Owner being required to present any evidence of the amount or character of actual damages sustained by reason thereof.

Therefore, the Contractor shall be liable to the Owner for payment of liquidated damages in the amount of _____ Dollars ($_____) for each day that Substantial Completion is delayed beyond the date set forth herein for the achievement of Substantial Completion, as adjusted for time extensions as may have been granted pursuant to the terms and conditions of the Contract Documents. Such liquidated damages are intended to represent estimated actual damages and are not intended as a penalty, and the Contractor shall pay them to the Owner without limiting the Owner's right to terminate this Agreement as provided elsewhere herein.

If, pursuant to Section 3.3.2, the Contractor is required to achieve Substantial Completion of any portion of the Work prior to the date required for the Substantial Completion of the entirety of the Work, the Owner shall be entitled to assess the foregoing liquidated damages for the failure of the Contractor to complete such portion of the Work by the applicable Substantial Completion Date reflected in Section 3.3.2, as adjusted for time extensions as may have been granted pursuant to the terms and conditions of the Contract Documents.

The collection of liquidated damages by the Owner under this Section 4.5 shall be in addition to, and not in lieu of, the Owner's right to recover from the Contractor the Owner's increased costs to complete the Project arising from the Contractor's delay. Further, such liquidated damages shall in no way limit the Owner's other rights under this Agreement or the Owner's entitlement to damages for any other injury, damage or loss, other than for delay, for which the Contractor may be responsible.

§ 4.6 Not Used.

ARTICLE 5 PAYMENTS

§ 5.1 Progress Payments

§ 5.1.1 Based upon Applications for Payment submitted to the Architect by the Contractor and Certificates for Payment issued by the Architect, the Owner shall make progress payments on account of the Contract Sum to the Contractor as provided below and elsewhere in the Contract Documents.

§ 5.1.2 The period covered by each Application for Payment shall be one calendar month ending on the last day of the month.

§ 5.1.3 The Owner shall make payments of amounts certified by the Architect and properly due to the Contractor under each Application for Payment within thirty (30) days after the Owner's and the Architect's receipt of such Application for Payment, provided it is properly submitted, correct and accepted by the Owner in accordance with the provisions of Article 9 of the General Conditions.

§ 5.1.4 Each Application for Payment shall be based on the most recent schedule of values submitted by the Contractor in accordance with the Contract Documents. The schedule of values shall allocate the entire Contract Sum among the various portions of the Work. The schedule of values shall be prepared in such form, and supported by such data to substantiate its accuracy, as the Architect and the Owner may require. This schedule unless objected to by the Architect or the Owner shall be used as a basis for reviewing the Contractor's Applications for Payment.

§ 5.1.5 Applications for Payment shall show the percentage of completion of each portion of the Work as of the end of the period covered by the Application for Payment.

AIA Document A101™ – 2017. Copyright © 1915, 1918, 1925, 1937, 1951, 1958, 1961, 1963, 1967, 1974, 1977, 1987, 1991, 1997, 2007 and 2017 by The American Institute of Architects. **All rights reserved.** **WARNING: This AIA® Document is protected by U.S. Copyright Law and International Treaties. Unauthorized reproduction or distribution of this AIA® Document, or any portion of it, may result in severe civil and criminal penalties, and will be prosecuted to the maximum extent possible under the law.**
This document is not an original AIA® Contract Document, but a template produced by AIA® Contract Documents software for producing a customized document.

§ 5.1.6 Subject to the provisions of the Contract Documents, the amount of each progress payment shall be computed as follows:

§ 5.1.6.1 The amount of each progress payment shall first include:

.1 That portion of the Contract Sum properly allocable to completed Work; and

.2 That portion of the Contract Sum properly allocable to materials and equipment delivered and suitably stored at the site for subsequent incorporation in the completed construction, and, if approved in advance by the Owner, suitably stored off the site at a location agreed upon in writing.

§ 5.1.6.2 The amount of each progress payment shall then be reduced by:

.1 The aggregate of any amounts previously paid by the Owner;

.2 The amount, if any, for Work that remains uncorrected and for which the Architect has previously withheld a Certificate for Payment as provided in Article 9 of the General Conditions;

.3 Any amount for which the Contractor does not intend to pay a Subcontractor or material supplier, unless the Work has been performed by others the Contractor intends to pay;

.4 For Work performed or defects discovered since the last payment application, any amount for which the Architect may withhold payment, or nullify a Certificate of Payment in whole or in part, as provided in Article 9 of the General Conditions;

.5 Retainage withheld pursuant to Section 5.1.8; and

.6 Any additional amounts required by law to be withheld by the Owner due to the Contractor's failure to comply with its obligations under Connecticut General Statutes Sections 4a-60, 4a-60(a) or Sections 46a-68c to 46a-68f, inclusive. Unless otherwise required by applicable law, the Owner shall withhold two percent (2%) of each progress payment (the "CHRO Holdback") until such time as the Connecticut Commission on Human Rights and Opportunities ("CHRO") notifies the Owner that it may release the CHRO Holdback to the Contractor.

§ 5.1.7 In addition to the foregoing, the Owner shall make the following payments:

§5.1.7.1 Upon determination by the Owner Representative that "Fifty Percent of the Contract is Completed", the Owner shall calculate the "Excess Retainage Amount" and shall pay the "Excess Retainage Amount" to the Contractor within ninety days after the Owner's receipt of the Application for Payment that first reflects that "Fifty Percent of the Contract is Completed".

§5.1.7.2 Upon Substantial Completion of the Work, the Contractor shall be entitled to payment of the balance of the Contract Sum net of amounts the Owner Representative determines for incomplete or nonconforming Work, retainage applicable to such incomplete or nonconforming Work, the CHRO Holdback, as applicable, and unsettled claims.

§5.1.7.3 Upon acceptance and written consent of the Contractor's surety, if any, and a written statement from the CHRO releasing the Owner from any obligation to withhold the CHRO Holdback, the Contractor shall be entitled to payment of the CHRO Holdback.

§5.1.7.4 If final completion of the Work is materially delayed through no fault of the Contractor, any Subcontractor, Sub-subcontractor or any other party for whom any of them is responsible, the Contractor shall be entitled to payment of any amounts payable in accordance with Section 9.10.3 of the General Conditions.

§ 5.1.8 Retainage

§ 5.1.8.1 For Applications for Payment Prior to Determination that Fifty Percent of the Contract is Completed: Retainage withheld by the Owner shall be seven and one-half percent (7.5%) of each progress payment.

§ 5.1.8.2 For Applications for Payment Following Determination that Fifty Percent of the Contract is Completed: Retainage withheld by the Owner shall be five percent (5.0%) of each progress payment.

AIA Document A101™ – 2017. Copyright © 1915, 1918, 1925, 1937, 1951, 1958, 1961, 1963, 1967, 1974, 1977, 1987, 1991, 1997, 2007 and 2017 by The American Institute of Architects. **All rights reserved.** **WARNING: This AIA® Document is protected by U.S. Copyright Law and International Treaties. Unauthorized reproduction or distribution of this AIA® Document, or any portion of it, may result in severe civil and criminal penalties, and will be prosecuted to the maximum extent possible under the law.**
This document is not an original AIA® Contract Document, but a template produced by AIA® Contract Documents software for producing a customized document.

§ 5.1.8.3 The Contractor shall not withhold retainage from any Subcontractor in excess of that withheld by the Owner in connection with such Subcontractor's Work. The Contractor shall release retainage to each Subcontractor upon the Contractor's receipt of retainage from the Owner attributable to the Work performed by such Subcontractor.

§ 5.1.8.4 For the purposes of Section 5.1.7 above and this Section 5.1.8, the following terms shall have the following meanings:

§ 5.1.8.4.1 "Fifty Percent of the Contract is Completed" is the stage in the progress of the Work when Certificates for Payment have been issued by the Architect and payment thereof approved by the Owner for an aggregate amount equal to fifty percent (50%) of the Contract Sum, as it may have been adjusted in accordance with the Contract Documents. For the purposes of this subsection 5.1.8.4.1, the Contract Sum shall include amounts payable for pending construction change orders and other pending change directives described in Section 9.3.1.1 of the General Conditions and excludes any amounts paid by joint check pursuant to Section 9.5.4 of the General Conditions.

§ 5.1.8.4.2 "Excess Retainage Amount" shall mean the amount by which the total retainage then withheld by the Owner exceeds the amount of retainage that would have then been withheld by the Owner if the applicable retainage withheld thus far had been based on five percent (5%) of each progress payment made instead of seven and one-half percent (7.5%).

§ 5.1.9 Except with the Owner's prior approval, the Contractor shall not make advance payments to suppliers for materials or equipment which have not been delivered and stored at the site.

§ 5.2 Final Payment

§ 5.2.1 Final payment, constituting the entire unpaid balance of the Contract Sum, shall be made by the Owner to the Contractor when

.1 the Contractor has fully performed the Work and all of its obligations under the Contract Documents except for the Contractor's responsibility to correct Work as provided in Article 12 of the General Conditions, and to satisfy other requirements, if any, which extend beyond final payment; and

.2 a final Certificate for Payment has been issued by the Architect.

§ 5.2.2 The Owner's final payment to the Contractor shall be made no later than thirty (30) days after the issuance of the Architect's final Certificate for Payment subject to the provisions of Article 9 of the General Conditions.

ARTICLE 6 DISPUTE RESOLUTION

§ 6.1 Initial Decision Maker

The Associate Vice President for University Planning, Design and Construction for the Owner (or his/her designee) and in the case of a project for UCONN Health ("UCH"), its Associate Vice President for Facilities Development & Operations (or his/her designee) or their respective successors in function will serve as the Initial Decision Maker pursuant to Article 15 of the General Conditions, unless the parties appoint below another individual, not a party to this Agreement, to serve as the Initial Decision Maker.

§ 6.2 Not Used.

ARTICLE 7 TERMINATION OR SUSPENSION

§ 7.1 The Contract may be terminated by the Owner or the Contractor as provided in Article 14 of the General Conditions.

§ 7.2 The Work may be suspended by the Owner as provided in Article 14 of the General Conditions.

ARTICLE 8 MISCELLANEOUS PROVISIONS

AIA Document A101™ – 2017. Copyright © 1915, 1918, 1925, 1937, 1951, 1958, 1961, 1963, 1967, 1974, 1977, 1987, 1991, 1997, 2007 and 2017 by The American Institute of Architects. **All rights reserved.** **WARNING: This AIA® Document is protected by U.S. Copyright Law and International Treaties. Unauthorized reproduction or distribution of this AIA® Document, or any portion of it, may result in severe civil and criminal penalties, and will be prosecuted to the maximum extent possible under the law.**
This document is not an original AIA® Contract Document, but a template produced by AIA® Contract Documents software for producing a customized document.

§ 8.1 Where reference is made in this Agreement to a provision of the General Conditions or another Contract Document, the reference refers to that provision as amended or supplemented by other provisions of the Contract Documents.

§ 8.2 The Owner Representative

Prior to the commencement of the Work, the Owner shall provide the Contractor with the name and contact information (including an email address for notice pursuant to Section 8.6) for the individual who will serve as the primary point of contact for the Contractor's day to day communications with the University. Except as otherwise expressly provided in the Contract Documents, such individual shall not have the authority to approve or execute Change Orders, or other amendments to the Contract. Claims shall be submitted as provided in Article 15 of the General Conditions.

§ 8.3 The Contractor's Representative

(Name, address, email address, and other information)

_____

§ 8.4 The Contractor's representative shall not be changed without ten days' prior notice to the Owner.

§ 8.5 Insurance and Bonds

§ 8.5.1 The Owner and the Contractor shall purchase and maintain insurance as set forth in Exhibit A attached hereto and as provided elsewhere in the Contract Documents.

§ 8.5.2 The Contractor shall provide bonds as described in Article 11 of the General Conditions.

§ 8.6 Notice in electronic format for the purposes of Section 1.6.1 of the General Conditions from one party to this Agreement to the other shall be transmitted by electronic mail to the email addresses for the designated representatives as provided in Sections 8.2 and 8.3 of this Agreement.

§ 8.7 Other Provisions

§ 8.7.1 The Contractor is hereby specifically cautioned that unless specifically authorized, in writing, by the University's Vice President of Communications or successor in function, on a case by case basis, the Contractor shall have no right to use, and shall not use, in any manner, the name of the University of Connecticut, its officials or employees, or the Seal of the University:
(a) in any advertising, publicity, promotion nor;
(b) to express or to imply any endorsement of the Contractor's work product or services.

§ 8.7.2 The Contractor shall comply, and shall require all Subcontractors, Sub-subcontractors and suppliers to comply, with all of the State Requirements set forth on Exhibit F to the extent applicable.

§ 8.7.3 This Agreement may be executed in counterparts, and each counterpart shall have the same force and effect as an original and, when taken together, shall constitute one and the same instrument and an effective binding agreement on the part of each of the undersigned. Execution of a facsimile or PDF copy shall have the same force and effect as execution of an original. Signed copies of this Agreement may be faxed and e-mailed with the same force and effect as if the originally executed Agreement had been delivered.

§ 8.8 Joint Venture/General Partnership

§ 8.8.1 If the Contractor is a joint venture or a general partnership, each member of the joint venture (a "Member") or partner of the partnership ("Partner"), as applicable, shall be jointly, severally and individually responsible to the Owner for the performance of all obligations of the Contractor under the Contract Documents and jointly, severally and individually liable to the Owner for the Contractor's failure to perform such obligations. In its dealings with the Owner, each Member or Partner, as applicable, shall have full authority to act on behalf of and to bind the Contractor as well as all Members or Partners, as applicable. Each Member or Partner, as applicable, shall be considered to be the agent of the Contractor and of all other Members or Partners.

ARTICLE 9 ENUMERATION OF CONTRACT DOCUMENTS

AIA Document A101™ – 2017. Copyright © 1915, 1918, 1925, 1937, 1951, 1958, 1961, 1963, 1967, 1974, 1977, 1987, 1991, 1997, 2007 and 2017 by The American Institute of Architects. **All rights reserved.** **WARNING: This AIA® Document is protected by U.S. Copyright Law and International Treaties. Unauthorized reproduction or distribution of this AIA® Document, or any portion of it, may result in severe civil and criminal penalties, and will be prosecuted to the maximum extent possible under the law.**
This document is not an original AIA® Contract Document, but a template produced by AIA® Contract Documents software for producing a customized document.

§ 9.1 The Contract Documents, except for Modifications issued after the execution of this Agreement, are enumerated below:

.1 This Agreement

.2 Exhibit A, Insurance

.3 The General Conditions

.4 Not Used

.5 Drawings prepared by _____and dated _____, and listed on the List of Drawings attached as Exhibit B, as the same may have been modified or supplemented by Bid Clarifications and Addenda.

.6 Specifications prepared by _____and dated _____, and which are listed in the Table of Contents attached as Exhibit C

.7 Bid Clarifications and Addenda, if any, are as follows:

Number	Date	Pages

.8 Other Exhibits:
Exhibit D - Preliminary Construction Schedule
Exhibit E - Labor Rates
Exhibit F - State Requirements

.9 Other documents, if any, forming part of the Contract Documents are listed below:

i. Invitation to Bid for the Project issued by the Owner on _____, _____including all exhibits and schedule attached thereto and all other documents incorporated therein by reference.
ii. The Owner's Contractor Environmental, Health & Safety Manual current as of the date of the execution of this Agreement by the Owner.
iii. The Owner's Code of Conduct current as of the date of the execution of this Agreement by the Owner.

Signed and agreed by:

OWNER *(Signature)*	CONTRACTOR *(Signature)*
« »	« »« »
(Printed name and title)	*(Printed name and title)*
Date:_____	Date:_____

AIA Document A101™ – 2017. Copyright © 1915, 1918, 1925, 1937, 1951, 1958, 1961, 1963, 1967, 1974, 1977, 1987, 1991, 1997, 2007 and 2017 by The American Institute of Architects. **All rights reserved.** **WARNING: This AIA® Document is protected by U.S. Copyright Law and International Treaties. Unauthorized reproduction or distribution of this AIA® Document, or any portion of it, may result in severe civil and criminal penalties, and will be prosecuted to the maximum extent possible under the law.**
This document is not an original AIA® Contract Document, but a template produced by AIA® Contract Documents software for producing a customized document.

EXHIBIT A
INSURANCE REQUIREMENTS

I. CONTRACTOR'S LIABILITY INSURANCE

A. The Contractor shall maintain with a company or companies lawfully authorized to do business in the State of Connecticut such insurance as will protect the Contractor from claims set forth below which may arise out of or result from the Contractor's operations and completed operations under the Contract and for which the Contractor may be legally liable, whether such operations be by the Contractor, a Subcontractor, a Sub-subcontractor, or anyone directly or indirectly employed by any of them, or by anyone for whose acts any of them may be liable:

1. Claims under workers' compensation, disability benefit and other similar employee benefit acts that are applicable to the Work to be performed;
2. Claims for damages because of bodily injury, occupational sickness or disease, or death of the Contractor's employees;
3. Claims for damages because of bodily injury, sickness or disease, or death of any person other than the Contractor's employees;
4. Claims for damages insured by usual personal injury liability coverage;
5. Claims for damages, other than to the Work itself, because of injury to or destruction of tangible property, including loss of use resulting therefrom;
6. Claims for damages because of bodily injury, death of a person or property damage arising out of ownership, maintenance or use of a motor vehicle;
7. Claims for bodily injury or property damage arising out of completed operations; and
8. Claims involving contractual liability applicable to the Contractor's obligations under Section 3.18 of the General Conditions.

B. The insurance required by Section A above shall be written for not less than the limits of liability set forth below or required by law, whichever coverage is greater. Coverages shall be maintained without interruption from the date of commencement of the Work until the date of final payment and, (i) with respect to coverage required to be maintained under the Contract Documents for a period of time after final payment, for such additional period of time, and, (ii) with respect to the Contractor's completed operations coverage, until the expiration of the period for correction of Work and for such additional period as may be specified in the Contract Documents. Coverage for all insurance policies shall be on an occurrence basis, with the exception of the Pollution Liability coverage described in Section I.B.6 herein, which may be on a claims-made basis.

1. **Worker's Compensation Insurance**: Worker's Compensation Insurance in Statutory Limits of the Worker's Compensation Laws of the State of Connecticut, and other extensions, with Coverage B – Employer's Liability of not less than limits of $1,000,000 – Each Accident, $1,000,000 – Policy Limit and $1,000,000 – Each Employee. Coverage under the Broad Form All State extension shall also be included.
2. **Commercial General Liability Insurance**: $1,000,000 combined single limit per occurrence for bodily injury, personal injury and property damage, with no exclusions for hazards of operations (including but not limited to elevators, explosion, collapse and/or underground hazards). Coverage shall include Premises and Operations, Independent Contractors, Products and Completed Operations, Contractual Liability and Broad Form Property Damage coverage. If a general aggregate is used, the general aggregate limit shall apply separately to the project or the general aggregate limit shall be twice the occurrence limit. The coverage shall contain no special limitations on the scope of protection afforded to the State. Said policy shall also state that it is primary insurance. Completed operations coverage shall be maintained for a period of three (3) years after final completion of the Work.
3. **Automobile Liability Insurance**: Automobile Liability Insurance covering all owned, non-owned and hired automobiles, trucks and trailers of the respective parties required to provide and maintain this insurance. Such insurance shall provide coverage not less than that of the Standard Comprehensive Automobile Liability policy in limits not less than, as respects Contractor and all tiers of Subcontractors, $1,000,000 Combined Single Limit each occurrence for Bodily Injury and Property Damage.

4. **Umbrella Liability Insurance:** Umbrella liability (following form) in the amount of $5,000,000 per Occurrence.
5. **Aircraft Liability**: If aircraft of any kind is used by the Contractor, any tier of Subcontractor or by anyone else on their behalf, the Contractor or Subcontractor shall maintain or cause the operator of the aircraft to maintain aircraft public liability insurance insuring passengers and the general public against personal injury, bodily injury or property damage arising from aircraft owned, used, operated or hired in connection with the Work by the Contractor, Subcontractor or anyone else in limits of $50,000,000 Combined Single Limit for any one occurrence, each aircraft. If the aircrafts to be used are unmanned aircrafts, the Contractor, Subcontractor or operator of the aircraft may be permitted by the Owner to maintain other coverages and limits than as provided herein for aircrafts generally if approved by the Owner in writing in advance of the use of such unmanned aircrafts
6. **Contractor's Pollution Liability**: If the work of this project includes the abatement, removal, cleanup or handling of any asbestos, PCB's, lead based paint, or other pollutants or hazardous materials, then the Contractor shall also provide evidence that Pollution Liability Insurance, including completed operations and Contractual Liability coverage of not less than limits of $5,000,000 has been procured and is in force on the project. However, if the Contractor demonstrates that coverage for claims arising out of the abatement, removal, cleanup or other handling of asbestos, PCB's, lead based paint, or other pollutants or hazardous materials is covered by the Contractor's general liability insurance, a separate Contractor's Pollution Liability Policy will not be required.
7. **Professional Liability:** If the Contractor is required to furnish professional services for the Project, the Contractor shall procure Professional Liability insurance covering the performance of the professional services, with policy limits of not less than $1,000,000 per claim and $2,000,000 in the aggregate unless otherwise required by the Owner.
8. **Additional Insured Requirements**: The University of Connecticut, the State of Connecticut, their respective officers, officials, agents, employees, boards and commissions shall be named as Additional Insureds under the coverages described in Paragraphs 2-6 of this Section B and that said coverage(s) is provided for all operations, uses, occupations, acts and activities of the insureds under the Contract Documents and under any amendments, modifications, extensions or renewals of said Contracts regardless of whether liability is attributable to the named insureds or a combination of the named insureds and the additional named insureds. Coverage shall be provided in the form of an endorsement to the Contractor's insurance policy or policies, which endorsement shall be at least as broad as ISO Form CG 20 37 04 13 and ISO Form CG 20 10 04 13.
9. If the Contractor is a joint venture or general partnership, the joint venture or general partnership and each individual member or partner of the joint venture or general partnership, as applicable, must be designated in each policy as named insureds.
10. A Certificate of Insurance shall clearly indicate the Project name, Project number or some easily identifiable reference to the relationship to the Owner.
11. Each liability policy shall contain a Cross Liability Endorsement and shall include a waiver of subrogation clause.
12. All insurance secured by Contractor or Subcontractors pursuant to the Owner's requirements under the provisions of this Section shall be in policies subject to the Owner's approval, as to form, content, limits of liability, cost and issuing companies. Such companies shall have and maintain an A.M. Best rating of not less than A-(VII), or otherwise acceptable to Owner.
13. If the Contractor maintains insurance against physical loss or damage to Contractor's construction equipment and tools, such insurance shall include an insurer's waiver of rights of subrogation in favor of Owner.

C. Certificates of insurance acceptable to the Owner shall be filed with the Owner prior to commencement of the Work and thereafter upon renewal or replacement of each required policy of insurance. These certificates and the insurance policies required under this Exhibit A shall contain a provision that coverages afforded under the policies will not be canceled, terminated or materially changed, altered or allowed to expire until at least thirty (30) days' prior written notice has been given to the Owner. If any of the foregoing insurance coverages are required to remain in force after final payment and are reasonably available, an additional certificate evidencing continuation of liability coverage, including coverage for completed operations, shall be submitted with the final Application for Payment as required by Section 9.10.2 of the General Conditions and thereafter upon renewal or replacement of such coverage until the expiration of the time required by Section I.B of this Exhibit A. Information concerning

reduction of coverage on account of revised limits or claims paid under the General Aggregate, or both, shall be furnished by the Contractor with reasonable promptness in accordance with the Contractor's information and belief and shall identify on their faces the project name and contract number to which they apply. The Certificate(s) of Insurance must also provide clear evidence that the Contractor's Insurance Policies contain at least the minimum limits of coverage and special provisions prescribed in this Exhibit A.

II. PROPERTY INSURANCE

A. Property insurance on an all-risk basis, including coverage for the perils of earthquakes and floods, has been purchased by the Owner. Insurance required by this Section is not intended to cover machinery, tools and equipment of the Contractor which is used in the performance of the Work, but is not incorporated into the permanent improvements, nor any materials and equipment paid for by the Owner and stored off-site, for which the Contractor shall procure property insurance satisfactory to the Owner. The Contractor shall, at is own expense, provide coverage for its machinery, tools and equipment subject to these provisions. Unless the Project is for new construction (rather than for renovations to an existing structure or facilities), the Owner's property insurance program shall provide for Builder's Risk insurance coverage for the Project.

B. **Builder's Risk Insurance:** If the Project is for new construction (rather than for renovations to an existing structure or facilities), the Contractor shall purchase and maintain Builder's Risk Insurance in the amount of the initial Contract Sum (or Guaranteed Maximum Price, as applicable) plus values of subsequent modifications or change orders on a replacement cost basis. The terms and conditions of such Builder's Risk insurance shall be satisfactory to the Owner in all respects. The Builder's Risk coverage shall be written on a Special Covered Cause of Loss form and shall include theft, vandalism, malicious mischief, collapse, temporary buildings, transit, debris removal, increased cost of construction, architect fees and expenses, soft costs, flood and earthquake. Builder's Risk shall include portions of Work located away from site but intended for use at the site. Contractor shall obtain consent of the insurance company and delete any provisions with regard to restrictions within any occupancy clause. Equipment break down coverage shall be included and shall cover insured equipment during installation and testing.

C. As regards Builder's Risk insurance maintained by the Contractor under Section II.B above, the Contractor shall be responsible for all costs not covered because of deductibles required under such insurance. As regards Builder's Risk insurance maintained by the Owner under Section II.A above, if such insurance requires deductibles, the Contractor shall pay costs not covered because of such deductibles provided the subject loss was caused by the acts or omissions of the Contractor, a Subcontractor or Sub-subcontractor or any other person or entity for whom or which any of them is responsible.

D. As regards partial occupancy or use by the Owner the Owner and the Contractor shall take reasonable steps to obtain consent of the insurance company or companies and shall, without mutual written consent, take no action with respect to partial occupancy or use that would cause cancellation, lapse or reduction of insurance.

For Use with GC and CMR Contracts

EXHIBIT F
State of Connecticut Terms and Conditions

1. **STATUTORY AUTHORITY**. Statutory Authority. Connecticut General Statutes §§ 4a-52a, 10a-104, 10a-108, 10a-109d(a)(5) and/or 10a-151b, provide the University with authority to enter into contracts in the pursuit of its mission.

2. **NONDISCRIMINATION**. References in this section to "Contract" shall mean this Agreement and references to "Contractor" shall mean the Contractor.
(a) For purposes of this Section, the following terms are defined as follows: 1) "Commission" means the Commission on Human Rights and Opportunities; 2)"Contract" and "contract" include any extension or modification of the Contract or contract; 3) "Contractor" and "contractor" include any successors or assigns of the Contractor or contractor; 4) "Gender identity or expression" means a person's gender-related identity, appearance or behavior, whether or not that gender-related identity, appearance or behavior is different from that traditionally associated with the person's physiology or assigned sex at birth, which gender-related identity can be shown by providing evidence including, but not limited to, medical history, care or treatment of the gender-related identity, consistent and uniform assertion of the gender-related identity or any other evidence that the gender-related identity is sincerely held, part of a person's core identity or not being asserted for an improper purpose; 5)"good faith" means that degree of diligence which a reasonable person would exercise in the performance of legal duties and obligations; 6)"good faith efforts" shall include, but not be limited to, those reasonable initial efforts necessary to comply with statutory or regulatory requirements and additional or substituted efforts when it is determined that such initial efforts will not be sufficient to comply with such requirements; 7) "marital status" means being single, married as recognized by the State of Connecticut, widowed, separated or divorced; 8) "mental disability" means one or more mental disorders, as defined in the most recent edition of the American Psychiatric Association's "Diagnostic and Statistical Manual of Mental Disorders", or a record of or regarding a person as having one or more such disorders; 9) "minority business enterprise" means any small contractor or supplier of materials fifty-one percent or more of the capital stock, if any, or assets of which is owned by a person or persons: (1) who are active in the daily affairs of the enterprise, (2) who have the power to direct the management and policies of the enterprise, and (3) who are members of a minority, as such term is defined in subsection (a) of Conn. Gen. Stat. § 32-9n; and 10) "public works contract" means any agreement between any individual, firm or corporation and the State or any political subdivision of the State other than a municipality for construction, rehabilitation, conversion, extension, demolition or repair of a public building, highway or other changes or improvements in real property, or which is financed in whole or in part by the State, including, but not limited to, matching expenditures, grants, loans, insurance or guarantees.

For purposes of this Section, the terms "Contract" and "contract" do not include a contract where each contractor is (1) a political subdivision of the state, including, but not limited to, a municipality, unless the contract is a municipal public works contract or quasi-public agency project contract, (2) any other state, including but not limited to any federally recognized Indian tribal governments, as defined in Conn. Gen. Stat. § 1-267, (3) the federal government, (4) a foreign government, or (5) an agency of a subdivision, state or government described in the immediately preceding enumerated items (1), (2), (3), or (4).

(b) (1) The Contractor agrees and warrants that in the performance of the Contract such Contractor will not discriminate or permit discrimination against any person or group of persons on the grounds of race, color, religious creed, age, marital status, national origin, ancestry, sex, gender identity or expression, status as a veteran, intellectual disability, mental disability or physical disability, including, but not limited to, blindness, unless it is shown by such Contractor that such disability prevents performance of the work involved, in any manner prohibited by the laws of the United States or of the State of Connecticut; and the Contractor further agrees to take affirmative action to ensure that applicants with job-related qualifications are employed and that employees are treated when employed without regard to their race, color, religious creed, age, marital status, national origin, ancestry, sex, gender identity or expression, status as a veteran, intellectual disability, mental disability or physical disability, including, but not limited to, blindness, unless it is shown by the Contractor that such disability prevents performance of the work involved; (2) the Contractor agrees, in all solicitations or advertisements for employees placed by or on behalf of the Contractor, to state that it is an "affirmative action equal opportunity employer" in accordance with regulations adopted by the Commission; (3) the Contractor agrees to provide each labor union or representative of workers with which the Contractor has a collective bargaining Agreement or other contract

or understanding and each vendor with which the Contractor has a contract or understanding, a notice to be provided by the Commission, advising the labor union or workers' representative of the Contractor's commitments under this section and to post copies of the notice in conspicuous places available to employees and applicants for employment; (4) the Contractor agrees to comply with each provision of this Section and Conn. Gen. Stat. §§ 46a-68e and 46a-68f and with each regulation or relevant order issued by said Commission pursuant to Conn. Gen. Stat. §§ 46a-56, 46a-68e, 46a-68f and 46a-86; and (5) the Contractor agrees to provide the Commission on Human Rights and Opportunities with such information requested by the Commission, and permit access to pertinent books, records and accounts, concerning the employment practices and procedures of the Contractor as relate to the provisions of this Section and Conn. Gen. Stat. § 46a-56. If the contract is a public works contract, municipal public works contract or contract for a quasi-public agency project, the Contractor agrees and warrants that he or she will make good faith efforts to employ minority business enterprises as subcontractors and suppliers of materials on such public works or quasi-public agency projects.

(c) Determination of the Contractor's good faith efforts shall include, but shall not be limited to, the following factors: The Contractor's employment and subcontracting policies, patterns and practices; affirmative advertising, recruitment and training; technical assistance activities and such other reasonable activities or efforts as the Commission may prescribe that are designed to ensure the participation of minority business enterprises in public works projects.

(d) The Contractor shall develop and maintain adequate documentation, in a manner prescribed by the Commission, of its good faith efforts.

(e) The Contractor shall include the provisions of subsection (b) of this Section in every subcontract or purchase order entered into in order to fulfill any obligation of a contract with the State and in every subcontract entered into in order to fulfill any obligation of a municipal public works contract for a quasi-public agency project, and such provisions shall be binding on a subcontractor, vendor or manufacturer unless exempted by regulations or orders of the Commission. The Contractor shall take such action with respect to any such subcontract or purchase order as the Commission may direct as a means of enforcing such provisions including sanctions for noncompliance in accordance with Conn. Gen. Stat. § 46a-56 as amended; provided if such Contractor becomes involved in, or is threatened with, litigation with a subcontractor or vendor as a result of such direction by the Commission regarding a State contract, the Contractor may request the State of Connecticut to enter into any such litigation or negotiation prior thereto to protect the interests of the State and the State may so enter.

(f) The Contractor agrees to comply with the regulations referred to in this Section as they exist on the date of this Contract and as they may be adopted or amended from time to time during the term of this Contract and any amendments thereto.

(g) (1) The Contractor agrees and warrants that in the performance of the Contract such Contractor will not discriminate or permit discrimination against any person or group of persons on the grounds of sexual orientation, in any manner prohibited by the laws of the United States or the State of Connecticut, and that employees are treated when employed without regard to their sexual orientation; (2) the Contractor agrees to provide each labor union or representative of workers with which such Contractor has a collective bargaining Agreement or other contract or understanding and each vendor with which such Contractor has a contract or understanding, a notice to be provided by the Commission on Human Rights and Opportunities advising the labor union or workers' representative of the Contractor's commitments under this section, and to post copies of the notice in conspicuous places available to employees and applicants for employment; (3) the Contractor agrees to comply with each provision of this section and with each regulation or relevant order issued by said Commission pursuant to Conn. Gen. Stat. § 46a-56; and (4) the Contractor agrees to provide the Commission on Human Rights and Opportunities with such information requested by the Commission, and permit access to pertinent books, records and accounts, concerning the employment practices and procedures of the Contractor which relate to the provisions of this Section and Conn. Gen. Stat. § 46a-56.

(h) The Contractor shall include the provisions of the foregoing paragraph in every subcontract or purchase order entered into in order to fulfill any obligation of a contract with the State and such provisions shall be binding on a subcontractor, vendor or manufacturer unless exempted by regulations or orders of the Commission. The Contractor shall take such action with respect to any such subcontract or purchase order as the Commission may direct as a means of enforcing such provisions including sanctions for noncompliance in accordance with Conn. Gen. Stat. § 46a-56 as amended; provided, if such Contractor becomes involved in, or is threatened with, litigation with a subcontractor or vendor as a result of such direction by the Commission regarding a State contract, the

Contractor may request the State of Connecticut to enter into any such litigation or negotiation prior thereto to protect the interests of the State and the State may so enter.

3. STATE EXECUTIVE ORDERS

This Contract is subject to the provisions of Executive Order No. Three of Governor Thomas J. Meskill, promulgated June 16, 1971, concerning labor employment practices, Executive Order No. Seventeen of Governor Thomas J. Meskill, promulgated February 15, 1973, concerning the listing of employment openings and Executive Order No. Sixteen of Governor John G. Rowland promulgated August 4, 1999, concerning violence in the workplace, all of which are incorporated into and are made a part of the Contract as if they had been fully set forth in it. The Contract may also be subject to Executive Order No. 14 of Governor M. Jodi Rell, promulgated April 17, 2006, concerning procurement of cleaning products and services and to Executive Order No. 49 of Governor Dannel P. Malloy, promulgated May 22, 2015, mandating disclosure of certain gifts to public employees and contributions to certain candidates for office. If Executive Order 14 and/or Executive Order 49 are applicable, they are deemed to be incorporated into and are made a part of the Contract as if they had been fully set forth in it. At the Contractor's request, the Owner shall provide a copy of these orders to the Contractor.

4. ETHICS AND COMPLIANCE

Contractor acknowledges that by doing business with or seeking to do business with the State it is subject to certain provisions of the Code of Ethics for Public Officials of the State of Connecticut (the "Code of Ethics") applicable to current or prospective state contractors. Contractor acknowledges receipt and review of the "Guide to the Code of Ethics for Current or Potential State Contractors" as currently posted on the Web site of the Office of State Ethics www.ct.gov/ethics and agrees to comply with all provisions of the Code of Ethics applicable to Contractor as a current or potential state contractor. As required under Connecticut General Statutes §1-101qq, the Contractor will include the foregoing reference to the state ethics law summary in each subcontract entered into with Subcontractors in connection with the Project.

In accordance with the Owner's compliance program, the Owner has in place an anonymous ethics and compliance reporting hotline service – 1-888-685-2637. Any person who is aware of unethical practices, fraud, violation of state laws or regulations or other concerns relating to Owner policies and procedures can report such matters anonymously.

Such persons may also directly contact the Owner's compliance office at: Office of Audit, Compliance, and Ethics, 9 Walters Avenue, Unit 5084, Storrs, CT 06269-5084; Phone 860-486-4526; Fax 860-486-4527. As a provider of goods and/or services to the Owner, you are hereby required to notify your employees, as well as any subcontractors, who are involved in the implementation of this contract, of this reporting mechanism.

5. CAMPAIGN CONTRIBUTION RESTRICTIONS

For all State contracts as defined in section 9-612 of the Connecticut General Statutes having a value in a calendar year of $50,000 or more or a combination or series of such agreements or contracts having a value of $100,000 or more, the authorized signatory to this Contract expressly acknowledges receipt of the State Elections Enforcement Commission's notice advising state contractors of state campaign contribution and solicitation prohibitions, and will inform its principals of the contents of the notice (SEEC Form 11):

SEEC FORM 11 CONNECTICUT STATE ELECTIONS ENFORCEMENT COMMISSION (Rev.7/18)

Notice to Executive Branch State Contractors and Prospective State Contractors of Campaign Contribution and Solicitation Limitations

This notice is provided under the authority of Connecticut General Statutes §9-612 (f) (2) and is for the purpose of informing state contractors and prospective state contractors of the following law (italicized words are defined on the reverse side of this page).

CAMPAIGN CONTRIBUTION AND SOLICITATION LIMITATIONS

No state contractor, prospective state contractor, principal of a state contractor or principal of a prospective state contractor, with regard to a state contract or state contract solicitation with or from a state agency in the executive branch or a quasi-public agency or a holder, or principal of a holder, of a valid prequalification certificate, shall make a contribution to (i) an exploratory committee or candidate committee established by a candidate for nomination or election to the office of Governor, Lieutenant Governor, Attorney General, State Comptroller, Secretary of the State or State Treasurer, (ii) a political committee authorized to make

contributions or expenditures to or for the benefit of such candidates, or (iii) a party committee (which includes town committees).

In addition, no holder or principal of a holder of a valid prequalification certificate, shall make a contribution to (i) an exploratory committee or candidate committee established by a candidate for nomination or election to the office of State senator or State representative, (ii) a political committee authorized to make contributions or expenditures to or for the benefit of such candidates, or (iii) a party committee.

On and after January 1, 2011, no state contractor, prospective state contractor, principal of a state contractor or principal of a prospective state contractor, with regard to a state contract or state contract solicitation with or from a state agency in the executive branch or a quasi- public agency or a holder, or principal of a holder of a valid prequalification certificate, shall knowingly solicit contributions from the state contractor's or prospective state contractor's employees or from a subcontractor or principals of the subcontractor on behalf of (i) an exploratory committee or candidate committee established by a candidate for nomination or election to the office of Governor, Lieutenant Governor, Attorney General, State Comptroller, Secretary of the State or State Treasurer, (ii) a political committee authorized to make contributions or expenditures to or for the benefit of such candidates, or (iii) a party committee.

DUTY TO INFORM

State contractors and prospective state contractors are required to inform their principals of the above prohibitions, as applicable, and the possible penalties and other consequences of any violation thereof.

PENALTIES FOR VIOLATIONS

Contributions or solicitations of contributions made in violation of the above prohibitions may result in the following civil and criminal penalties:

Civil penalties —Up to $2,000 or twice the amount of the prohibited contribution, whichever is greater, against a principal or a contractor. Any state contractor or prospective state contractor which fails to make reasonable efforts to comply with the provisions requiring notice to its principals of these prohibitions and the possible consequences of their violations may also be subject to civil penalties of up to $2,000 or twice the amount of the prohibited contributions made by their principals.

Criminal penalties —Any knowing and willful violation of the prohibition is a Class D felony, which may subject the violator to imprisonment of not more than 5 years, or not more than $5,000 in fines, or both.

CONTRACT CONSEQUENCES

In the case of a state contractor, contributions made or solicited in violation of the above prohibitions may result in the contract being voided.

In the case of a prospective state contractor, contributions made or solicited in violation of the above prohibitions shall result in the contract described in the state contract solicitation not being awarded to the prospective state contractor, unless the State Elections Enforcement Commission determines that mitigating circumstances exist concerning such violation.

The State shall not award any other state contract to anyone found in violation of the above prohibitions for a period of one year after the election for which such contribution is made or solicited, unless the State Elections Enforcement Commission determines that mitigating circumstances exist concerning such violation.

Additional information may be found on the website of the State Elections Enforcement Commission, www.ct. go v/ see c . Click on the link to "Lobbyist/Contractor Limitations."

DEFINITIONS

"State contractor" means a person, business entity or nonprofit organization that enters into a state contract. Such person, business entity or nonprofit organization shall be deemed to be a state contractor until December thirty-first of the year in which such contract terminates. "State contractor" does not include a municipality or any other political subdivision of the state, including any entities or associations duly created by the municipality or political subdivision exclusively amongst themselves to further any purpose authorized by statute or charter, or an employee in the executive or legislative branch of state government or a quasi-public agency, whether in the classified or unclassified service and full or part-time, and only in such person's capacity as a state or quasi-public agency employee.

"Prospective state contractor" means a person, business entity or nonprofit organization that (i) submits a response to a state contract

solicitation by the state, a state agency or a quasi-public agency, or a proposal in response to a request for proposals by the state, a state agency or a quasi-public agency, until the contract has been entered into, or (ii) holds a valid prequalification certificate issued by the Commissioner of Administrative Services under section 4a-100.

"Prospective state contractor" does not include a municipality or any other political subdivision of the state, including any entities or associations duly created by the municipality or political subdivision exclusively amongst themselves to further any purpose authorized by statute or charter, or an employee in the executive or legislative branch of state government or a quasi-public agency, whether in the classified or unclassified service and full or part-time, and only in such person's capacity as a state or quasi-public agency employee.

"Principal of a state contractor or prospective state contractor" means (i) any individual who is a member of the board of directors of, or has an ownership interest of five per cent or more in, a state contractor or prospective state contractor, which is a business entity, except for an individual who is a member of the board of directors of a nonprofit organization, (ii) an individual who is employed by a state contractor or prospective state contractor, which is a business entity, as president, treasurer or executive vice president, (iii) an individual who is the chief executive officer of a state contractor or prospective state contractor, which is not a business entity, or if a state contractor or prospective state contractor has no such officer, then the officer who duly possesses comparable powers and duties, (iv) an officer or an employee of any state contractor or prospective state contractor who has *managerial or discretionary responsibilities with respect to a state contract,* (v) the spouse or a *dependent child* who is eighteen years of age or older of an individual described in this subparagraph, or (vi) a political committee established or controlled by an individual described in this subparagraph or the business entity or nonprofit organization that is the state contractor or prospective state contractor.

"State contract" means an agreement or contract with the state or any state agency or any quasi-public agency, let through a procurement process or otherwise, having a value of fifty thousand dollars or more, or a combination or series of such agreements or contracts having a value of one hundred thousand dollars or more in a calendar year, for (i) the rendition of services, (ii) the furnishing of any goods, material, supplies, equipment or any items of any kind, (iii) the construction, alteration or repair of any public building or public work, (iv) the acquisition, sale or lease of any land or building, (v) a licensing arrangement, or (vi) a grant, loan or loan guarantee.

"State contract" does not include any agreement or contract with the state, any state agency or any quasi-public agency that is exclusively federally funded, an education loan, a loan to an individual for other than commercial purposes or any agreement or contract between the state or any state agency and the United States Department of the Navy or the United States Department of Defense.

"State contract solicitation" means a request by a state agency or quasi-public agency, in whatever form issued, including, but not limited to, an invitation to bid, request for proposals, request for information or request for quotes, inviting bids, quotes or other types of submittals, through a competitive procurement process or another process authorized by law waiving competitive procurement.

"Managerial or discretionary responsibilities with respect to a state contract" means having direct, extensive and substantive responsibilities with respect to the negotiation of the state contract and not peripheral, clerical or ministerial responsibilities.

"Dependent child" means a child residing in an individual's household who may legally be claimed as a dependent on the federal income tax of such individual.

"Solicit" means (A) requesting that a contribution be made, (B) participating in any fundraising activities for a candidate committee, exploratory committee, political committee or party committee, including, but not limited to, forwarding tickets to potential contributors, receiving contributions for transmission to any such committee, serving on the committee that is hosting a fundraising event, introducing the candidate or making other public remarks at a fundraising event, being honored or otherwise recognized at a fundraising event, or bundling contributions, (C) serving as chairperson, treasurer or deputy treasurer of any such committee, or (D) establishing a political committee for the sole purpose of soliciting or receiving contributions for any committee. Solicit does not include: (i) making a contribution that is otherwise permitted by Chapter 155 of the Connecticut General Statutes; (ii) informing any person of a position taken by a candidate for public office or a public official, (iii) notifying the person of any activities of, or contact information for, any candidate for public office; or (iv) serving as a member in any party committee or as an officer of such committee that is not otherwise prohibited in this section.

"Subcontractor" means any person, business entity or nonprofit organization that contracts to perform part or all of the obligations of a state contractor's state contract. Such person, business entity or nonprofit organization shall be deemed to be a subcontractor until December thirty first of the year in which the subcontract terminates. "Subcontractor" does not include (i) a municipality or any other political subdivision of the state, including any entities or associations duly created by the municipality or political subdivision exclusively amongst themselves to further any purpose authorized by statute or charter, or (ii) an employee in the executive or legislative branch of state government or a quasi-public agency, whether in the classified or unclassified service and full or part- time, and only in such person's capacity as a state or quasi-public agency employee.

"Principal of a subcontractor" means (i) any individual who is a member of the board of directors of, or has an ownership interest of five per cent or more in, a subcontractor, which is a business entity, except for an individual who is a member of the board of directors of a nonprofit organization, (ii) an individual who is employed by a subcontractor, which is a business entity, as president, treasurer or executive vice president, (iii) an individual who is the chief executive officer of a subcontractor, which is not a business entity, or if a subcontractor has no such officer, then the officer who duly possesses comparable powers and duties, (iv) an officer or an employee of any subcontractor who has managerial or discretionary responsibilities with respect to a subcontract with a state contractor, (v) the spouse or a dependent child who is eighteen years of age or older of an individual described in this subparagraph, or (vi) a political committee established or controlled by an individual described in this subparagraph or the business entity or nonprofit organization that is the subcontractor.

6. WHISTLEBLOWING

This Contract is subject to the provisions of § 4-61dd of the Connecticut General Statutes. In accordance with this statute, if an officer, employee or appointing authority of the Contractor takes or threatens to take any personnel action against any employee of the Contractor in retaliation for such employee's disclosure of

information to any employee of the Contracting state or quasi-public agency or the Auditors of Public Accounts or the Attorney General under the provisions of subsection (a) of such statute, the Contractor shall be liable for a civil penalty of not more than five thousand dollars for each offense, up to a maximum of twenty per cent of the value of this Contract. Each violation shall be a separate and distinct offense and in the case of a continuing violation, each calendar day's continuance of the violation shall be deemed to be a separate and distinct offense. The Owner may request that the Attorney General bring a civil action in the Superior Court for the Judicial District of Hartford to seek imposition and recovery of such civil penalty. In accordance with subsection (f) of such statute, each large state Contractor, as defined in the statute, shall post a notice of the provisions of the statute relating to large state Contractors in a conspicuous place which is readily available for viewing by the employees of the Contractor.

7. CODE OF CONDUCT

In furtherance of its longstanding commitment to fundamental human rights, to the dignity of all people, and to the environment, the Owner has developed the Code of Conduct for University of Connecticut Vendors (the "Vendor Code of Conduct"). The Contractor hereby acknowledges receipt of the Vendor Code of Conduct. A copy of the Vendor Code of Conduct is available at http://csr.uconn.edu/. The Vendor Code of Conduct is hereby incorporated herein by reference to the extent the Contractor is required to comply with the same pursuant to this section.

The Contractor agrees to comply with the "Principal Expectations" described in the Vendor Code of Conduct. The Contractor further agrees to comply with the "Preferential Standards" described in the Vendor Code of Conduct, to the extent a commitment to so comply, or a representation of compliance, was provided by the Contractor to the Owner in writing. Any such commitment or representation is hereby incorporated herein by reference.

The Contractor agrees to provide the Owner with such evidence of Contractor's compliance with this section as the Owner reasonably requests and to, at the request of the Owner, provide a comprehensive, annual summary report of the Contractor's corporate social and environmental practices.

8. BACKGROUND CHECKS

The Contractor shall comply with all of the Owner's background screening requirements applicable to the Project (the "Screening Requirements"). If the Project is to take place on the UConn Health campus in Farmington, Connecticut, the Screening Requirements will be outlined in the Specifications for the Project. If the Project is located on any other campus of the Owner, the Screening Requirements will be outlined in the Bid Documents for the Project. The Contractor warrants that it will not assign any employee, independent contractor or agent to perform services under this Contract unless that employee, independent contractor or agent is cleared for work on the Project by the Contractor, in a manner consistent with the Screening Requirements, for performing such services. Without limiting the foregoing, the Contractor shall immediately remove any employee, independent contractor or agents performing services under this Contract on any campus of the Owner if it becomes known to the Contractor that such person may be a danger to the health or safety of the campus community, or at the request of the Owner based on a concern of community or individual safety.

Without limiting the obligations of the Contractor under §3.18 of the General Conditions, the Contractor shall defend, indemnify and hold harmless the state of Connecticut, the Owner, and all of their employees, agents and/or assigns for and against any claims, suits or proceedings resulting from the failure of the Contractor to comply with the Screening Requirements and/or that are caused in whole or in part by the actions or omissions of the Contractor, any Subcontractor, Sub-subcontractor, their respective employees, or any other person or entity for whom any of them is responsible.

DRAFT

AIA® Document A201™ – 2017

General Conditions of the Contract for Construction

AIA A201-2017 FOR USE WITH A101-2017 FOR GC PROJECT

Rev. 12-19-18

for the following PROJECT:

(Name and location or address)

« »« »

THE OWNER:

(Name and address)

« »« »

« »

THE CONTRACTOR:

(*Name and address*)

« »« »

« »

THE ARCHITECT:

(Name and address)

« »« »

« »

TABLE OF ARTICLES

1 GENERAL PROVISIONS

2 OWNER

3 CONTRACTOR

4 ARCHITECT

5 SUBCONTRACTORS

6 CONSTRUCTION BY OWNER OR BY SEPARATE CONTRACTORS

7 CHANGES IN THE WORK

8 TIME

9 PAYMENTS AND COMPLETION

10 PROTECTION OF PERSONS AND PROPERTY

11 INSURANCE AND BONDS

12 UNCOVERING AND CORRECTION OF WORK

ADDITIONS AND DELETIONS: The author of this document has added information needed for its completion. The author may also have revised the text of the original AIA standard form. An *Additions and Deletions Report* that notes added information as well as revisions to the standard form text is available from the author and should be reviewed.

This document has important legal consequences. Consultation with an attorney is encouraged with respect to its completion or modification.

For guidance in modifying this document to include supplementary conditions, see AIA Document A503™, Guide for Supplementary Conditions.

ELECTRONIC COPYING of any portion of this AIA® Document to another electronic file is prohibited and constitutes a violation of copyright laws as set forth in the footer of this document.

AIA Document A201™ – 2017. Copyright © 1911, 1915, 1918, 1925, 1937, 1951, 1958, 1961, 1963, 1966, 1970, 1976, 1987, 1997, 2007 and 2017 by The American Institute of Architects. **All rights reserved. WARNING: This AIA® Document is protected by U.S. Copyright Law and International Treaties. Unauthorized reproduction or distribution of this AIA® Document, or any portion of it, may result in severe civil and criminal penalties, and will be prosecuted to the maximum extent possible under the law.** This draft was produced by AIA software at 09:01:33 ET on 01/02/2019 under Order No.4449788754 which expires on 04/27/2019, and is not for resale.

User Notes: (1984719719)

13 MISCELLANEOUS PROVISIONS

14 TERMINATION OR SUSPENSION OF THE CONTRACT

15 CLAIMS AND DISPUTES

DRAFT

AIA Document A201™ – 2017. Copyright © 1911, 1915, 1918, 1925, 1937, 1951, 1958, 1961, 1963, 1966, 1970, 1976, 1987, 1997, 2007 and 2017 by The American Institute of Architects. **All rights reserved. WARNING: This AIA® Document is protected by U.S. Copyright Law and International Treaties. Unauthorized reproduction or distribution of this AIA® Document, or any portion of it, may result in severe civil and criminal penalties, and will be prosecuted to the maximum extent possible under the law.** This draft was produced by AIA software at 09:01:33 ET on 01/02/2019 under Order No.4449788754 which expires on 04/27/2019, and is not for resale.
User Notes: (1984719719)

DRAFT

AIA® Document A201™ – 2017

General Conditions of the Contract for Construction

ARTICLE 1 GENERAL PROVISIONS

§ 1.1 Basic Definitions

§ 1.1.1 The Contract Documents

The Contract Documents are enumerated in the Agreement between the Owner and Contractor (hereinafter the "Agreement") and consist of the Agreement, these General Conditions of the Contract for Construction (hereinafter the "General Conditions"), Drawings, Specifications, Addenda issued prior to execution of the Contract, other documents listed in the Agreement, and Modifications issued after execution of the Contract. A Modification is (1) a written amendment to the Contract signed by both parties; (2) a Change Order; (3) a Construction Change Directive; or (4) a written order for a minor change in the Work issued by the Architect.

§ 1.1.2 The Contract

The Contract Documents form the Contract for Construction. The Contract represents the entire and integrated agreement between the parties hereto and supersedes prior negotiations, representations or agreements, either written or oral. The Contract may be amended or modified only by a Modification. The Contract Documents shall not be construed to create a contractual relationship of any kind (1) between the Contractor and the Architect or the Architect's consultants; (2) between the Owner and a Subcontractor or a Sub-subcontractor; (3) between the Owner and the Architect or the Architect's consultants; or (4) between any persons or entities other than the Owner and the Contractor. The Architect shall, however, be entitled to performance and enforcement of obligations under the Contract intended to facilitate performance of the Architect's duties.

§ 1.1.3 The Work

The term "Work" means all of the construction and services required by, described in, reasonably inferable from, and as necessary to produce the results required by the Contract Documents, whether completed or partially completed, and includes, without limitation, the furnishing of (1) all materials, supplies, equipment, fixtures, tools, implements, and other items and facilities required for, or in connection with, or for inclusion or incorporation into, the Project; and (2) all labor, supervision, transportation, utilities, storage and all other services required for or in connection with the Project, except as specifically indicated in the Contract Documents to be the responsibility of others. The Work may constitute the whole or a part of the Project, whether on or off the site of the Project.

§ 1.1.4 The Project

The Project is the total construction of which the Work performed under the Contract Documents may be the whole or a part, and which may include construction by the Owner and by Separate Contractors.

§ 1.1.5 The Drawings

The Drawings are the graphic and pictorial portions of the Contract Documents showing the design, location, and dimensions of the Work, generally including plans, elevations, sections, details, schedules, and diagrams.

§ 1.1.6 The Specifications

The Specifications are that portion of the Contract Documents consisting of the

ADDITIONS AND DELETIONS: The author of this document has added information needed for its completion. The author may also have revised the text of the original AIA standard form. An *Additions and Deletions Report* that notes added information as well as revisions to the standard form text is available from the author and should be reviewed.

This document has important legal consequences. Consultation with an attorney is encouraged with respect to its completion or modification.

For guidance in modifying this document to include supplementary conditions, see AIA Document A503™, Guide for Supplementary Conditions.

ELECTRONIC COPYING of any portion of this AIA® Document to another electronic file is prohibited and constitutes a violation of copyright laws as set forth in the footer of this document.

AIA Document A201™ – 2017. Copyright © 1911, 1915, 1918, 1925, 1937, 1951, 1958, 1961, 1963, 1966, 1970, 1976, 1987, 1997, 2007 and 2017 by The American Institute of Architects. **All rights reserved. WARNING: This AIA® Document is protected by U.S. Copyright Law and International Treaties. Unauthorized reproduction or distribution of this AIA® Document, or any portion of it, may result in severe civil and criminal penalties, and will be prosecuted to the maximum extent possible under the law.** This draft was produced by AIA software at 09:01:33 ET on 01/02/2019 under Order No.4449788754 which expires on 04/27/2019, and is not for resale.
User Notes: (1984719719)

written requirements for materials, equipment, systems, standards and workmanship for the Work, and performance of related services.

§ 1.1.7 Instruments of Service

Instruments of Service are representations, in any medium of expression now known or later developed, of the tangible and intangible creative work performed by the Architect and the Architect's consultants under their respective professional services agreements. Instruments of Service may include, without limitation, studies, surveys, models, sketches, drawings, specifications, and other similar materials and Instruments of Service may be in paper or electronic form.

§ 1.1.8 Initial Decision Maker

The Initial Decision Maker is the person identified in Section 6.1 of the Agreement to render initial decisions on Claims in accordance with Section 15.2.

§ 1.2 Correlation and Intent of the Contract Documents

§ 1.2.1 Intent of the Contract Documents

The intent of the Contract Documents is to include all items necessary for the proper execution and completion of the Work by the Contractor. The Contract Documents are complementary, and what is required by one shall be as binding as if required by all; performance by the Contractor shall be required only to the extent consistent with the Contract Documents and reasonably inferable from them as being necessary to produce the indicated results.

§ 1.2.1.1 Severability

The invalidity of any provision of the Contract Documents shall not invalidate the Contract or its remaining provisions. If it is determined that any provision of the Contract Documents violates any law, or is otherwise invalid or unenforceable, then that provision shall be revised to the extent necessary to make that provision legal and enforceable. In such case the Contract Documents shall be construed, to the fullest extent permitted by law, to give effect to the parties' intentions and purposes in executing the Contract.

§ 1.2.1.2 Inconsistencies

In the event of inconsistencies within or between parts of the Contract Documents or between the Contract Documents and applicable standards, codes, and ordinances, the Contractor shall: (1) provide the better quality or greater quantity of Work; or (2) comply with the more stringent requirement; either or both in accordance with the Owner Representative's interpretation. The terms and conditions of this Section 1.2.1.2 however, shall not relieve the Contractor of any of the obligations set forth in Sections 3.2 and 3.7.

§ 1.2.1.1.1 Before ordering any materials or equipment or performing any Work, the Contractor shall verify the figures shown on the Drawings before laying out the Work and will be responsible for any errors or inaccuracies resulting from Contractor's failure to do so. In the event that the Contractor shall, while laying out the Work, become aware of: (1) any conflicts between (a) the Drawings, the Specifications or any Modification to the Drawings or the Specifications and (b) the actual layout of the Work, or (2) any conflicts or inconsistencies in the Drawings, the Specifications or any Modification to the Drawings or the Specifications themselves, Contractor shall promptly notify the Architect. If the Contractor proceeds without the Architect's clarification and instruction on the matter, the Contractor shall proceed at Contractor's own risk.

§ 1.2.1.1.2 If a minor change in the Work is found necessary to address actual field conditions, the Contractor shall submit detailed drawings to reflect such change for approval by the Architect before implementing such change in the Work.

§ 1.2.2 Organization of the Specifications into divisions, sections and articles, and arrangement of Drawings shall not control the Contractor in dividing the Work among Subcontractors or in establishing the extent of Work to be performed by any trade.

§ 1.2.3 Unless otherwise stated in the Contract Documents, words that have well-known technical or construction industry meanings are used in the Contract Documents in accordance with such recognized

AIA Document A201™ – 2017. Copyright © 1911, 1915, 1918, 1925, 1937, 1951, 1958, 1961, 1963, 1966, 1970, 1976, 1987, 1997, 2007 and 2017 by The American Institute of Architects. **All rights reserved. WARNING: This AIA® Document is protected by U.S. Copyright Law and International Treaties. Unauthorized reproduction or distribution of this AIA® Document, or any portion of it, may result in severe civil and criminal penalties, and will be prosecuted to the maximum extent possible under the law.** This draft was produced by AIA software at 09:01:33 ET on 01/02/2019 under Order No.4449788754 which expires on 04/27/2019, and is not for resale.
User Notes: (1984719719)

meanings.

§ 1.3 Capitalization

Terms capitalized in these General Conditions include those that are (1) specifically defined, (2) the titles of numbered articles or (3) the titles of other documents published by the American Institute of Architects.

§ 1.4 Interpretation

In the interest of brevity, the Contract Documents frequently omit modifying words such as "all" and "any" and articles such as "the" and "an," but the fact that a modifier or an article is absent from one statement and appears in another is not intended to affect the interpretation of either statement.

§ 1.5 Ownership and Use of Drawings, Specifications and other Instruments of Service

§ 1.5.1 The Owner will retain all common law, statutory and other reserved rights, including copyrights, in the Instruments of Service as provided in the contract between the Owner and the Architect. Unless otherwise indicated in such contract, the Architect and the Architect's consultants shall be deemed the authors of their respective Instruments of Service. Upon completion of the Work, and at the request of the Architect, all copies of the Instruments of Service, except one record set that may be retained by the Contractor, shall be returned or suitably accounted for to the Architect. None of the Contractor, Subcontractor, Sub-subcontractor, or any material or equipment supplier shall own or claim a copyright in the Instruments of Service. The Instruments of Service and other documents prepared by the Architect and the Architect's consultants, and copies thereof furnished to the Contractor, are for use solely with respect to the Project. None of the Contractor, a Subcontractor, Sub-subcontractor, or any material or equipment suppliers may use the Instruments of Service on other projects or for additions to the Project outside the scope of the Work without the specific written consent of the Owner, Architect, and the Architect's consultants.

§ 1.5.2 The Contractor, Subcontractors, Sub-subcontractors and material or equipment suppliers are authorized to use and reproduce applicable portions of the Drawings, Specifications and other documents prepared by the Architect and the Architect's consultants appropriate to and for use in the execution of the Work under the Contract Documents. All copies made under this authorization shall bear the statutory copyright notice, if any, shown on the Drawings, Specifications and other documents. Submittal or distribution to meet official regulatory requirements or for other purposes in connection with this Project is not to be construed as publication in derogation of the Architect's or Architect's consultants' reserved rights.

§ 1.6 Notice

§ 1.6.1 Except as otherwise provided in Section 1.6.2, where the Contract Documents require one party to notify or give notice to the other party, such notice shall be provided in writing to the designated representative of the party to whom the notice is addressed and shall be deemed to have been duly served if delivered in person, by mail, by courier, or by electronic transmission if a method for electronic transmission is set forth in the Agreement.

§ 1.6.2 Notice of Claims as provided in Section 15.1.3 shall be provided in writing and shall be deemed to have been duly served only if delivered to the designated representative of the party to whom the notice is addressed (and also, in the case of a Notice of Claims by the Contractor to the Owner, to the Owner's Representative and the Initial Decision Maker) by certified or registered mail, or by courier providing proof of delivery.

§ 1.7 Transmission of Data in Digital Form

If the parties intend to transmit Instruments of Service or any other information or documentation in digital form, they shall endeavor to establish necessary protocols governing such transmissions, unless otherwise already provided in the Contract or the Contract Documents.

§ 1.8 Digital Data Use and Transmission

The parties shall agree upon protocols governing the transmission and use of Instruments of Service or any other information or documentation in digital form. The parties may use AIA Document E203™–2013, Building Information Modeling and Digital Data Exhibit, to establish the protocols for the development, use, transmission, and exchange of digital data.

AIA Document A201™ – 2017. Copyright © 1911, 1915, 1918, 1925, 1937, 1951, 1958, 1961, 1963, 1966, 1970, 1976, 1987, 1997, 2007 and 2017 by The American Institute of Architects. **All rights reserved.** **WARNING: This AIA® Document is protected by U.S. Copyright Law and International Treaties. Unauthorized reproduction or distribution of this AIA® Document, or any portion of it, may result in severe civil and criminal penalties, and will be prosecuted to the maximum extent possible under the law.** This draft was produced by AIA software at 09:01:33 ET on 01/02/2019 under Order No.4449788754 which expires on 04/27/2019, and is not for resale.
User Notes: (1984719719)

§ 1.9 Building Information Models Use and Reliance

Any use of, or reliance on, all or a portion of a building information model without agreement to protocols governing the use of, and reliance on, the information contained in the model and without having those protocols set forth in AIA Document E203™–2013, Building Information Modeling and Digital Data Exhibit, and the requisite AIA Document G202™–2013, Project Building Information Modeling Protocol Form, shall be at the using or relying party's sole risk and without liability to the other party and its contractors or consultants, the authors of, or contributors to, the building information model, and each of their agents and employees.

§ 1.10 Provisions Required by Law Deemed Inserted

§ 1.10.1 Each and every provision of law and clause required by law to be inserted in this Contract shall be deemed to be inserted herein and the Contract shall be read and enforced as though it were included herein, and if through mistake or otherwise any such provision is not inserted, or is not correctly inserted, then upon the application of either party, the Contract shall forthwith be physically amended to make such insertion.

ARTICLE 2 OWNER

§ 2.1 General

§ 2.1.1 The Owner is the person or entity identified as such in the Agreement and is referred to throughout the Contract Documents as if singular in number. Except as otherwise provided in Section 4.2.1, the Architect does not have any authority to act on behalf of the Owner. The term "Owner" means the Owner or the Owner's authorized representative.

§ 2.1.1.1 Pursuant to Section 8.2 of the Agreement, the Owner shall designate a representative through whom all communications by the Contractor with the Owner shall be made except as otherwise provided in the Contract Documents or instructed in writing by the Owner. If the Owner retains a third party (other than the Architect) to provide construction administration services, the Owner shall instruct the Contractor as to the role of such third party in the Project (including, without limitation, the extent to which the Contractor is to communicate directly with such third party) and the authority of such third party, if any, to act on behalf of the Owner.

§ 2.1.2 Not Used.

§ 2.2 Not Used.

§ 2.3 Information and Services Required of the Owner

§ 2.3.1 Except for permits and fees that are the responsibility of the Contractor under the Contract Documents, including those required under Section 3.7.1, the Owner shall secure and pay for necessary approvals, easements, assessments and charges required for construction, use or occupancy of permanent structures or for permanent changes in existing facilities.

§ 2.3.2 The Owner shall retain an architect lawfully licensed to practice architecture, or an entity lawfully practicing architecture, in the jurisdiction where the Project is located. That person or entity is identified as the Architect in the Agreement and is referred to throughout the Contract Documents as if singular in number.

§ 2.3.3 If the employment of the Architect terminates, the Owner shall employ a successor whose status under the Contract Documents shall be that of the Architect.

§ 2.3.4 To the extent such surveys are in the possession of the Owner and are required for the performance of the Work, the Owner shall furnish surveys describing physical characteristics, legal limitations and utility locations for the site of the Project. The Contractor shall exercise proper precautions relating to the safe performance of the Work. Contractor shall review such surveys and notify the Owner of any inaccuracies therein within fourteen (14) days of its receipt.

§ 2.3.5 Data concerning the Project site, size of the Project site, access to the Project site, staging and storing,

AIA Document A201™ – 2017. Copyright © 1911, 1915, 1918, 1925, 1937, 1951, 1958, 1961, 1963, 1966, 1970, 1976, 1987, 1997, 2007 and 2017 by The American Institute of Architects. **All rights reserved. WARNING: This AIA® Document is protected by U.S. Copyright Law and International Treaties. Unauthorized reproduction or distribution of this AIA® Document, or any portion of it, may result in severe civil and criminal penalties, and will be prosecuted to the maximum extent possible under the law.** This draft was produced by AIA software at 09:01:33 ET on 01/02/2019 under Order No.4449788754 which expires on 04/27/2019, and is not for resale.
User Notes: (1984719719)

present obstructions on or near the Project site, conditions of existing adjacent structures, locations and depths of sewers, conduits or pipes, gas lines, position of sidewalks, curbs and pavements, and other data concerning site conditions to the extent provided by the Owner, has been obtained from sources Owner believes reliable. Accuracy of such data, however, is not guaranteed and is furnished solely for accommodation of Contractor. Use of such data is made at the Contractor's sole risk and expense.

§ 2.3.6 The Owner shall furnish information or services required of the Owner by the Contract Documents with reasonable promptness. The Owner shall also furnish any other information or services under the Owner's control and relevant to the Contractor's performance of the Work with reasonable promptness after receiving the Contractor's written request for such information or services.

§ 2.3.7 The Contractor shall be responsible for determining how many copies of the Drawings and other Contract Documents are necessary for the execution of the Work. The Contractor shall be responsible for the reproduction and distribution of such copies.

§ 2.4 Owner's Right to Stop the Work

If the Contractor (1) fails to correct Work that is not in accordance with the requirements of the Contract Documents as required by Section 12.2; (2) repeatedly fails to carry out Work in accordance with the Contract Documents; or (3) creates a situation which the Owner believes, in its sole judgement, poses an imminent risk of loss to property or persons, the Owner may issue a written order to the Contractor to stop the Work, or any portion thereof, until the cause for such order has been eliminated; however, the right of the Owner to stop the Work shall not give rise to a duty on the part of the Owner to exercise this right for the benefit of the Contractor or any other person or entity, except to the extent required by Section 6.1.3.

§ 2.5 Owner's Right to Carry Out the Work

If the Contractor defaults or neglects to carry out the Work in accordance with the Contract Documents and (1) fails within a seven-day period after receipt of notice of such default or neglect from the Owner to commence and continue correction of such default or neglect with diligence and promptness, and (2) further fails to do so within three days after receipt of a second such notice from the Owner, the Owner shall be entitled to (but not obligated to), without prejudice to other rights and remedies Owner may have, correct the deficiencies in the Work. In such case an appropriate Change Order shall be issued deducting from payments then or thereafter due the Contractor the Owner's cost of correcting such deficiencies in the Work, including expenses and compensation payable to the Architect for additional services made necessary by Contractor's default, neglect or failure. The Contractor shall also be responsible for all of the Owner's other costs, damages, delays, and associated impacts arising from the Owner's exercise of its rights under this Section 2.5. If payments then or thereafter due the Contractor are not sufficient to cover amounts payable to the Owner under this Section 2.5, the Contractor shall pay the difference to the Owner.

§2.6 Extent of Owner Rights

§2.6.1 The rights stated in Article 2 and elsewhere in the Contract Documents are cumulative and not in limitation of any rights of the Owner (1) granted in the Contract Documents, (2) at law or (3) in equity.

§2.6.2 In no event shall the Owner have control over, charge of, or any responsibility for construction means, methods, techniques, sequences or procedures for safety precautions and programs in connection with the Work, notwithstanding any of the rights and authority granted the Owner in the Contract Documents.

ARTICLE 3 CONTRACTOR

§ 3.1 General

§ 3.1.1 The Contractor is the person or entity identified as such in the Agreement and is referred to throughout the Contract Documents as if singular in number. The Contractor shall be lawfully licensed, if required in the jurisdiction where the Project is located. The Contractor has designated the representative set forth as Contractor's representative in Section 8.3 of the Agreement who has express authority to bind the Contractor with respect to all matters under this Contract. Any and all notices to be provided to the Contractor by the Owner or Architect under the Contract Documents shall be delivered to such Contractor's representative. The term "Contractor" means the Contractor or the Contractor's authorized representative. The Contractor shall not replace the Contractor's representative without ten days prior written notice and the

AIA Document A201™ – 2017. Copyright © 1911, 1915, 1918, 1925, 1937, 1951, 1958, 1961, 1963, 1966, 1970, 1976, 1987, 1997, 2007 and 2017 by The American Institute of Architects. **All rights reserved**. **WARNING: This AIA® Document is protected by U.S. Copyright Law and International Treaties. Unauthorized reproduction or distribution of this AIA® Document, or any portion of it, may result in severe civil and criminal penalties, and will be prosecuted to the maximum extent possible under the law.** This draft was produced by AIA software at 09:01:33 ET on 01/02/2019 under Order No.4449788754 which expires on 04/27/2019, and is not for resale.
User Notes: (1984719719)

prior written consent of the Owner.

§ 3.1.2 The Contractor shall perform the Work in accordance with the Contract Documents.

§ 3.1.3 The Contractor shall not be relieved of obligations to perform the Work in accordance with the Contract Documents either by activities or duties of the Architect or the Owner in the administration of the Contract, or by tests, inspections or approvals required or performed by persons or entities other than the Contractor.

§ 3.1.4 The Contractor represents and warrants the following to the Owner (in addition to the other representations and warranties contained in the Contract Documents) as an inducement to the Owner to execute the Contract, which representations and warranties shall survive the execution and delivery of the Contract and the final completion of the Work:

.1 That it is financially solvent, able to pay its debts as they mature and possesses sufficient working capital to complete the Work and perform its obligations under the Contract Documents;

.2 That it, through its Subcontractors or otherwise, is able to furnish the tools, materials, supplies, equipment and labor required to complete the Work and perform its obligations hereunder and has sufficient experience and competence to do so;

.3 That it is authorized to do business in the State where the Project is located and properly licensed by all necessary governmental and public and quasi-public authorities having jurisdiction over it and over the Work and the site of the Project;

.4 That its execution of the Contract and its performance thereunder have been duly authorized by all necessary corporate action; and

.5 That its duly authorized representative has visited the site of the Project, familiarized himself or herself with the local conditions under which the Work is to be performed and correlated his/her observations with the requirements of the Contract Documents.

§ 3.2 Review of Contract Documents and Field Conditions by Contractor

§ 3.2.1 The Contractor shall, along with such Subcontractors as the Contractor deems necessary, visit the Project site prior to the execution of the Contract. The execution of the Contract by the Contractor is a representation that the Contractor and such Subcontractors have visited the Project site, become familiar with all existing conditions under which the Work is to be performed and correlated personal observations with requirements of the Contract Documents.

§ 3.2.2 The Contractor may request permission from the Owner to conduct, at Contractor's sole cost and expense, tests, examinations and/or inspections as Contractor deems necessary to become sufficiently acquainted with existing conditions on the Project site. No such tests, examinations or inspections shall be conducted without the Owner's prior written approval and any engineer or consultant engaged by the Contractor or a Subcontractor to perform such test, examination or inspection shall be subject to the Owner's prior approval.

§ 3.2.3 Because the Contract Documents are complementary, the Contractor shall, before ordering any materials or starting each portion of the Work, carefully study and compare the various Contract Documents relative to that portion of the Work, as well as the information furnished by the Owner pursuant to Section 2.3, shall take field measurements of any existing conditions related to that portion of the Work, and shall observe any conditions at the site affecting it. These obligations are for the purpose of facilitating coordination and construction by the Contractor and are not for the purpose of discovering errors, omissions, or inconsistencies in the Contract Documents; however, the Contractor shall promptly report to the Architect and Owner Representative any errors, inconsistencies or omissions discovered by or made known to the Contractor as a request for information in such form as the Architect and the Owner may require. It is recognized that the Contractor's review is made in the Contractor's capacity as a contractor and not as a

AIA Document A201™ – 2017. Copyright © 1911, 1915, 1918, 1925, 1937, 1951, 1958, 1961, 1963, 1966, 1970, 1976, 1987, 1997, 2007 and 2017 by The American Institute of Architects. **All rights reserved**. **WARNING: This AIA® Document is protected by U.S. Copyright Law and International Treaties. Unauthorized reproduction or distribution of this AIA® Document, or any portion of it, may result in severe civil and criminal penalties, and will be prosecuted to the maximum extent possible under the law.** This draft was produced by AIA software at 09:01:33 ET on 01/02/2019 under Order No.4449788754 which expires on 04/27/2019, and is not for resale.
User Notes: (1984719719)

licensed design professional, unless otherwise specifically provided in the Contract Documents. After reporting to the Architect any error, inconsistency, or omission in or among the Contract Documents which the Contractor discovers or which is made known to the Contractor, the Contractor shall not proceed with the subject Work without the Architect's written response and/or clarifications and, if required, Owner's approval of any associated adjustments to the Contract Documents.

§ 3.2.4 The Contractor is not required to ascertain that the Contract Documents are in accordance with applicable laws, statutes, ordinances, building codes, rules and regulations, or lawful orders of public authorities, but the Contractor shall promptly report to the Architect and the Owner any nonconformity discovered by or made known to the Contractor as a request for information in such form as the Architect may require.

§ 3.2.5 If the Contractor believes that additional cost or time is involved because of clarifications or instructions the Architect issues in response to the Contractor's notices or requests for information pursuant to Sections 3.2.2 or 3.2.3, the Contractor shall submit Claims as provided in Article 15. If the Contractor fails to perform the obligations of Sections 3.2.2 or 3.2.3, the Contractor shall pay such costs and damages to the Owner, as would have been avoided if the Contractor had performed such obligations and the Contractor shall be responsible for associated delays and impacts. If the Contractor performs those obligations, the Contractor shall not be liable to the Owner or Architect for damages resulting from errors, inconsistencies or omissions in the Contract Documents, for differences between field measurements or conditions and the Contract Documents, or for nonconformities of the Contract Documents to applicable laws, statutes, ordinances, codes, rules and regulations, and lawful orders of public authorities unless the Contractor should have but failed to recognize such error, inconsistency, omission or difference.

§ 3.2.6 No additional compensation or time will be granted to the Contractor by reason of conditions which the Contractor could have discovered or reasonably anticipated through the fulfillment of its obligations under this Section 3.2.

§ 3.3 Supervision and Construction Procedures

§ 3.3.1 The Contractor shall supervise and direct the Work, using the Contractor's best skill and attention. The Contractor shall be solely responsible for, and have control over, construction means, methods, techniques, sequences, and procedures, and for coordinating all portions of the Work under the Contract. The Contractor shall schedule and perform the Work so as not to interfere with the Owner's on-going business operations or any other work being performed by or on behalf of the Owner in or about the Project site. If the Contract Documents give specific instructions concerning construction means, methods, techniques, sequences or procedures, the Contractor shall evaluate the jobsite safety thereof and, except as stated below, shall be fully and solely responsible for the jobsite safety of such means, methods, techniques, sequences or procedures. If the Contractor determines that such means, methods, techniques, sequences or procedures may not be safe, the Contractor shall give timely notice to the Owner and Architect, and shall propose alternative means, methods, techniques, sequences, or procedures. The Architect shall evaluate the proposed alternative solely for conformance with the design intent for the completed construction. Unless the Architect objects to the Contractor's proposed alternative, the Contractor shall perform the Work using its alternative means, methods, techniques, sequences or procedures.

§ 3.3.2 The Contractor shall be responsible to the Owner for any claims against the Owner and any damages, losses, costs and expenses incurred by the Owner resulting or arising from the acts and omissions of the Contractor's employees, Subcontractors, Sub-subcontractors, material and equipment suppliers, and their respective agents and employees, and any other persons or entities performing portions of the Work for, or on behalf of, the Contractor or any Subcontractors or Sub-subcontractors or material and equipment suppliers.

§ 3.3.3 The Contractor shall be responsible for inspection of portions of Work already performed to determine that such portions are in proper condition to receive subsequent Work.

§ 3.3.4 The Contractor's qualified representative shall attend all periodic progress meetings which will be held at such time and at such place as the Architect or the Owner shall designate.

AIA Document A201™ – 2017. Copyright © 1911, 1915, 1918, 1925, 1937, 1951, 1958, 1961, 1963, 1966, 1970, 1976, 1987, 1997, 2007 and 2017 by The American Institute of Architects. **All rights reserved.** **WARNING: This AIA® Document is protected by U.S. Copyright Law and International Treaties. Unauthorized reproduction or distribution of this AIA® Document, or any portion of it, may result in severe civil and criminal penalties, and will be prosecuted to the maximum extent possible under the law.** This draft was produced by AIA software at 09:01:33 ET on 01/02/2019 under Order No.4449788754 which expires on 04/27/2019, and is not for resale.
User Notes: (1984719719)

§ 3.4 Labor and Materials

§ 3.4.1 Unless otherwise provided in the Contract Documents, the Contractor shall provide and pay for labor, materials, equipment, tools, construction equipment and machinery, water, heat, utilities, transportation, and other facilities and services necessary for proper execution and completion of the Work, whether temporary or permanent and whether or not incorporated or to be incorporated in the Work.

§ 3.4.2 Except in the case of minor changes in the Work approved by the Architect in accordance with Section 3.12.8 or ordered by the Architect in accordance with Section 7.4, the Contractor may make substitutions only with the consent of the Owner, after evaluation by the Architect and in accordance with a Change Order or Construction Change Directive.

§ 3.4.2.1 Contractor's request for any substitution shall constitute a representation by the Contractor that:

.1 the Contractor and any Subcontractors and Sub-subcontractors impacted by such substitution have investigated the proposed substitute product and determined that it is equal or superior in all respects to the product specified;

.2 the Contractor and proposed manufacturer will provide the same or superior warranty coverage for the substitution that the Contractor would for the product specified;

.3 the cost data presented is complete and includes all related costs under this Contract, and Contractor waives all claims for additional costs related to the substitution which subsequently become apparent;

.4 Contractor shall coordinate the installation of the accepted substitution, making such changes as may be required for the Work to be complete in all respects;

.5 Contractor shall make requests for substitutions for Contractor's convenience within fourteen (14) days after Contract award or at the preconstruction meeting; and

.6 Contractor shall reimburse and compensate the Owner for any costs incurred in connection with, and/or the value of, any services performed by the Architect and/or the Owner associated with, addressing the request for substitution.

§ 3.4.3 All labor shall be performed by workmen skilled in their respective trades, and workmanship shall be of good quality so that first class work in accordance with the standards of construction set forth in the Contract Documents will be achieved. The Contractor shall enforce strict discipline and good order among the Contractor's employees and other persons carrying out the Work. The Contractor shall not permit the employment of unfit persons or persons not properly skilled in tasks assigned to them.

§ 3.4.3.1 The Contractor shall neither permit nor suffer the use of offensive language or lewd conduct by Contractor's employees or other persons carrying out the Work on or about the Project site. All of the Owner's buildings are smoke-free buildings. The Contractor shall not permit (1) smoking in the Owner's buildings, (2) outdoor smoking, where outdoor smoking could create a hazard, or (3) the introduction or use of drugs, spirituous or intoxicating liquors, on or about the Owner's property by the Contractor's employees or other persons carrying out the Work. The Contractor shall comply with the Owner's current "Policy on Discrimination Harassment and Related Interpersonal Violence" including its provisions prohibiting sexual harassment. The Contractor shall be fully responsible to the Owner for the acts and omissions of the Contractor's employees, Subcontractors, Sub-subcontractors and material and equipment suppliers, and all persons either directly or indirectly employed by any of them to perform any part of the Work.

§ 3.5 Warranty

§ 3.5.1 The Contractor warrants to the Owner and Architect that materials and equipment furnished under the Contract will be of good quality and new unless the Contract Documents require or permit otherwise. The Contractor further warrants that the Work will conform to the requirements of the Contract Documents and will be free from defects, except for those inherent in the quality of the Work the Contract Documents require or permit. Work, materials, or equipment not conforming to these requirements and any substitutions not properly approved and authorized, may be considered defective. The Contractor's warranty excludes remedy for damage or defect caused by abuse, alterations to the Work not executed by the Contractor, improper or insufficient maintenance, improper operation, or normal wear and tear and normal usage. If required by the Architect, the Contractor shall furnish satisfactory evidence as to the kind and quality of materials and equipment.

AIA Document A201™ – 2017. Copyright © 1911, 1915, 1918, 1925, 1937, 1951, 1958, 1961, 1963, 1966, 1970, 1976, 1987, 1997, 2007 and 2017 by The American Institute of Architects. **All rights reserved.** **WARNING: This AIA® Document is protected by U.S. Copyright Law and International Treaties. Unauthorized reproduction or distribution of this AIA® Document, or any portion of it, may result in severe civil and criminal penalties, and will be prosecuted to the maximum extent possible under the law.** This draft was produced by AIA software at 09:01:33 ET on 01/02/2019 under Order No.4449788754 which expires on 04/27/2019, and is not for resale.
User Notes: (1984719719)

§ 3.5.2 The Contractor shall procure and assign to the Owner at the time of Substantial Completion of the Work any and all Subcontractor, Sub-subcontractor, manufacturer or supplier warranties relating to any materials or labor used in the Work. Such warranties shall supplement the warranties provided by the Contractor in Section 3.5.1. All material, equipment, or other special warranties required by the Contract Documents shall be issued in the name of the Owner, or shall be transferable to the Owner, and shall commence in accordance with Section 9.8.4.

§ 3.5.3 Directions, specifications and recommendations by manufacturers for installation, handling, storing, adjustment, and operation of their materials or equipment shall be complied with, but the Contractor shall nonetheless have the responsibility of determining whether such directions, specifications, and recommendations may safely and suitably be employed in the Work, and of notifying the Architect and Owner in advance in writing of any deviation or modification necessary for installation safety or proper operation of the item.

§ 3.6 Taxes

The Owner is a tax-exempt institution. The Contractor shall be familiar with the current regulations of the Department of Revenue Service. The tax on materials or supplies exempted by such regulations shall not be included as part of the Contract Sum, or any Application for Payment, or request for Change Order or other compensation. A Sales Tax Certificate for the duration of the Project is available from the Owner's Purchasing Department upon written request.

§ 3.7 Permits, Fees, Notices, and Compliance with Laws

§ 3.7.1 Unless otherwise provided in the Contract Documents, the Contractor shall secure and pay for the building permit as well as for other permits, fees, licenses, and inspections by government agencies necessary for proper execution and completion of the Work that are customarily secured after execution of the Contract and legally required at the time bids are received or negotiations concluded.

§ 3.7.2 The Contractor shall comply with, be responsible for the performance of the Work in accordance with, and give notices required by all local, state and federal laws, statutes, ordinances, codes, building codes, rules, regulations, permits, and orders enacted, promulgated, issued or ordered by any governmental body or public or quasi-public authority having jurisdiction over the Work, the Contractor and/ or the site of the Project. The foregoing requirements shall include, without limitation, those relating to equal opportunity, labor, wages, and employment.

§ 3.7.3 If the Contractor performs Work knowing it to be contrary to applicable laws, statutes, ordinances, codes, rules, and regulations, or lawful orders of public authorities, the Contractor shall assume appropriate responsibility for such Work and shall bear the costs attributable to correction.

§ 3.7.4 If any governmental body having jurisdiction over the Work requires licenses or registrations for the performance of the Work, or any part thereof, the Contractor shall hold such valid licenses or registrations as may be required by law to prosecute the Work to completion. If any part of the Work for which such a license or registration is required to be performed by a Subcontractor or Sub-subcontractor, the Contractor shall ensure that any such subcontractor holds such valid licenses or registrations as may be required by law to prosecute said Work to completion.

§ 3.7.5 Concealed or Unknown Conditions. See Section 15.1.9 of these General Conditions.

§ 3.7.6 If, in the course of the Work, the Contractor encounters human remains or recognizes the existence of burial markers, archaeological sites or wetlands not indicated in the Contract Documents, the Contractor shall immediately suspend any operations that would affect them and shall notify the Owner and Architect. Upon receipt of such notice, the Owner shall promptly take any action necessary to obtain governmental authorization required to resume the operations. The Contractor shall continue to suspend such operations until otherwise instructed by the Owner but shall continue with all other operations that do not affect those remains or features. Requests for adjustments in the Contract Sum and Contract Time arising from the existence of such remains or features may be made as provided in Article 15.

AIA Document A201™ – 2017. Copyright © 1911, 1915, 1918, 1925, 1937, 1951, 1958, 1961, 1963, 1966, 1970, 1976, 1987, 1997, 2007 and 2017 by The American Institute of Architects. **All rights reserved.** **WARNING: This AIA® Document is protected by U.S. Copyright Law and International Treaties. Unauthorized reproduction or distribution of this AIA® Document, or any portion of it, may result in severe civil and criminal penalties, and will be prosecuted to the maximum extent possible under the law.** This draft was produced by AIA software at 09:01:33 ET on 01/02/2019 under Order No.4449788754 which expires on 04/27/2019, and is not for resale.
User Notes: (1984719719)

§ 3.8 Allowances

§ 3.8.1 The Contractor shall include in the Contract Sum all allowances stated in the Contract Documents. Items covered by allowances shall be supplied for such amounts and by such persons or entities as the Owner may direct, but the Contractor shall not be required to employ persons or entities to whom the Contractor has reasonable objection.

§ 3.8.2 Unless otherwise provided in the Contract Documents,

.1 Allowances shall cover the cost to the Contractor of materials and equipment delivered at the site and all required taxes, less applicable trade discounts;

.2 Contractor's costs for unloading and handling at the site, labor, installation costs, overhead, profit and other expenses contemplated for stated allowance amounts shall be included in the Contract Sum but not in the allowances, except when installation is specified as part of the allowance in Division 1 Specifications; and

.3 Whenever costs are more than or less than allowances, the Contract Sum shall be adjusted accordingly by Change Order. The amount of the Change Order shall reflect (1) the difference between actual costs and the allowances under Section 3.8.2.1; and (2) changes in Contractor's costs under Section 3.8.2.2, except when installation is specified as part of the allowance in the General Requirements (Division 1 of the Specifications).

§ 3.8.3 Materials and equipment under an allowance shall be selected by the Owner with reasonable promptness.

§ 3.9 Superintendent and Project Manager

§ 3.9.1 The Contractor shall employ a competent, experienced, full-time superintendent(s) and necessary assistants who shall be in attendance at the Project site during performance of the Work for the duration of the entire Project. The superintendent shall be satisfactory to the Owner and the Contractor shall not replace the superintendent without the prior written consent of the Owner. The superintendent shall represent the Contractor, and communications given to the superintendent shall be as binding as if given to the Contractor.

§ 3.9.2 If not already identified as part of the Owner's pre-qualification process, the Contractor, as soon as practicable after award of the Contract, shall furnish in writing to the Owner and Architect the name, qualifications and references of the proposed superintendent(s).

§ 3.9.3 The Contractor shall not employ a proposed superintendent to whom the Owner or Architect has made reasonable and timely objection. If, for any reason, the Owner finds the superintendent(s) to be unsatisfactory, the Contractor will, within five (5) days after the request of Owner, replace such superintendent with a qualified individual to whom neither the Owner nor the Architect has objection. The Contractor shall not change the superintendent without the Owner's written consent, which shall not unreasonably be withheld or delayed.

§ 3.9.4 The Contractor shall employ a competent Project Manager and necessary assistants who shall be in attendance at the Project site during performance of the Work for the duration of the entire Project. The Project Manager shall be satisfactory to the Owner and the Contractor shall not replace the Project Manager without the prior written consent of the Owner. The Project Manager shall represent the Contractor and communications given to the Project Manager shall be as binding as if given to the Contractor. Important communications shall be confirmed in writing. Other communications shall be similarly confirmed on written request in each case.

§ 3.9.5 If not already identified as part of the Owner's pre-qualification process, the Contractor, as soon as practicable after award of the Contract, shall furnish in writing to the Owner and the Architect the name, qualifications, and references of the proposed Project Manager. The Contractor shall not employ a proposed Project Manager to whom the Owner or Architect has made reasonable and timely objection. If, for any reason the Owner finds a Project Manager to be unsatisfactory, the Contractor shall, upon the request of the Owner, replace such Project Manager with a qualified individual to whom neither the Owner nor the Architect has objection. The Contractor shall not replace the Project Manager without the prior written

AIA Document A201™ – 2017. Copyright © 1911, 1915, 1918, 1925, 1937, 1951, 1958, 1961, 1963, 1966, 1970, 1976, 1987, 1997, 2007 and 2017 by The American Institute of Architects. **All rights reserved. WARNING: This AIA® Document is protected by U.S. Copyright Law and International Treaties. Unauthorized reproduction or distribution of this AIA® Document, or any portion of it, may result in severe civil and criminal penalties, and will be prosecuted to the maximum extent possible under the law.** This draft was produced by AIA software at 09:01:33 ET on 01/02/2019 under Order No.4449788754 which expires on 04/27/2019, and is not for resale.
User Notes: (1984719719)

consent of the Owner.

§ 3.9.6 Additional key personnel may be required for the Project. The Contractor shall provide additional personnel as required to ensure proper project management and coordination.

§ 3.10 Contractor's Construction Schedule

§ 3.10.1 The Contractor shall, within ten (10) days after the execution of the Contract, submit for the Owner's approval and the Architect's information a construction schedule for the Work including such detail and information and in the form as described in Division 1 of the Specifications. The schedule shall include, without limitation, (1) the date of commencement of the Work, interim schedule milestone dates, and the date of Substantial Completion; (2) an apportionment of the Work by construction activity; and (3) the time required for completion of each portion of the Work. The schedule shall provide for the orderly progression of the Work to completion and shall not exceed time limits current under the Contract Documents. Upon the Owner's approval of the schedule, such approved schedule shall be deemed to supersede and replace the preliminary schedule attached as Exhibit D to the Agreement and such approved schedule shall constitute a Contract Document. The schedule shall be revised at appropriate intervals as required by the conditions of the Work and Project.

§ 3.10.2 The Contractor, promptly after being awarded the Contract and thereafter as necessary to maintain a current submittal schedule, shall submit a submittal schedule for simultaneous review and approval by the Owner and Architect. The Owner and Architect's approval shall not be unreasonably delayed or withheld. The submittal schedule shall (1) be coordinated with the Contractor's construction schedule; and (2) allow the Architect reasonable time to review submittals. If the Contractor fails to submit a submittal schedule, or fails to provide submittals in accordance with the approved submittal schedule, the Contractor shall not be entitled to any increase in Contract Sum or extension of Contract Time based on the time required for review of submittals.

§ 3.11 Documents and Samples at the Site

§ 3.11.1 The Contractor shall make available, at the Project site, the Contract Documents, including Change Orders, Construction Change Directives, and other Modifications, in good order and marked currently to indicate field changes and selections made during construction, and the approved Shop Drawings, Product Data, Samples, and similar required submittals. These shall be in electronic form or paper copy as required by the Owner, available to the Architect and Owner, and delivered to the Architect for submittal to the Owner upon completion of the Work as a record of the Work as constructed.

§ 3.11.2 In addition, the Contractor shall indicate on the Drawings, as best as possible, all new and existing pipe and conduit runs which are concealed in the floor slabs, walls, ceilings, etc. The Contractor shall indicate on the Drawing the electrical distribution panel and circuit number supplying each item installed or reconnected, with diagrammatic lines showing sequence of connections. All changes shall be identified and circled on the Architect's and Engineer's drawings at the time they occur for each such field change.

§ 3.12 Shop Drawings, Product Data and Samples

§ 3.12.1 Shop Drawings are drawings, diagrams, schedules, and other data specially prepared for the Work by the Contractor or a Subcontractor, Sub-subcontractor, manufacturer, supplier, or distributor to illustrate some portion of the Work.

§ 3.12.2 Product Data are illustrations, standard schedules, performance charts, instructions, brochures, diagrams and other information furnished by the Contractor to illustrate materials or equipment for some portion of the Work.

§ 3.12.3 Samples are physical examples that illustrate materials, equipment or workmanship and establish standards by which the Work will be judged.

§ 3.12.4 Shop Drawings, Product Data, Samples and similar submittals are not Contract Documents. Their purpose is to demonstrate how the Contractor proposes to conform to the information given and the design concept expressed in the Contract Documents for those portions of the Work for which the Contract

AIA Document A201™ – 2017. Copyright © 1911, 1915, 1918, 1925, 1937, 1951, 1958, 1961, 1963, 1966, 1970, 1976, 1987, 1997, 2007 and 2017 by The American Institute of Architects. **All rights reserved**. **WARNING: This AIA® Document is protected by U.S. Copyright Law and International Treaties. Unauthorized reproduction or distribution of this AIA® Document, or any portion of it, may result in severe civil and criminal penalties, and will be prosecuted to the maximum extent possible under the law.** This draft was produced by AIA software at 09:01:33 ET on 01/02/2019 under Order No.4449788754 which expires on 04/27/2019, and is not for resale.
User Notes: (1984719719)

Documents require submittals. Review by the Architect is subject to the limitations of Section 4.2.7. Informational submittals upon which the Architect is not expected to take responsive action may be so identified in the Contract Documents. Submittals that are not required by the Contract Documents may be returned by the Architect without action.

§ 3.12.5 The Contractor shall review for compliance with the Contract Documents, approve and submit to the Architect Shop Drawings, Product Data, Samples and similar submittals required by the Contract Documents in accordance with the submittal schedule approved by the Architect or, in the absence of an approved submittal schedule, with reasonable promptness and in such sequence as to cause no delay in the Work or in the activities of the Owner or of Separate Contractors. Submittals which are not marked as reviewed for compliance with the Contract Documents and approved by the Contractor may be returned by the Architect or Engineer without action. Such return without action will not be grounds for an increase in the Contract Time.

§ 3.12.6 By submitting Shop Drawings, Product Data, Samples and similar submittals, the Contractor represents to the Owner and Architect that the Contractor has (1) reviewed and approved them; (2) determined and verified materials, field measurements and field construction criteria related thereto, or will do so; and (3) checked and coordinated the information contained within such submittals with the requirements of the Work and of the Contract Documents.

§ 3.12.7 The Contractor shall perform no portion of the Work for which the Contract Documents require submittal and review of Shop Drawings, Product Data, Samples or similar submittals until the respective submittal has been approved by the Architect.

§ 3.12.8 The Work shall be in accordance with approved submittals except that the Contractor shall not be relieved of responsibility for deviations from requirements of the Contract Documents by the Architect's approval of Shop Drawings, Product Data, Samples or similar submittals unless the Contractor has specifically notified and informed the Architect and the Owner of such deviation at the time of submittal and (1) the Owner has given written approval to the specific deviation as a minor change in the Work; or (2) a Change Order or Construction Change Directive has been issued authorizing the deviation. The Contractor shall not be relieved of responsibility for errors or omissions in Shop Drawings, Product Data, Samples or similar submittals by the Architect's approval thereof.

§ 3.12.9 The Contractor shall direct specific attention, in writing or on resubmitted Shop Drawings, Product Data, Samples or similar submittals, to revisions other than those requested by the Architect on previous submittals. In the absence of such notice, the Architect's approval of a resubmission shall not apply to such revisions.

§ 3.12.10 The Contractor shall not be required to provide professional services that constitute the practice of architecture or engineering unless such services are specifically required by the Contract Documents for a portion of the Work or unless the Contractor needs to provide such services in order to carry out the Contractor's responsibilities for construction means, methods, techniques, sequences, and procedures. The Contractor shall not be required to provide professional services in violation of applicable law.

§ 3.12.10.1 If professional design services or certifications by a design professional related to systems, materials or equipment are specifically required of the Contractor by the Contract Documents, the Owner and the Architect will specify all performance and design criteria that such services must satisfy. The Contractor shall be entitled to reasonably rely upon the adequacy and accuracy of the performance and design criteria provided in the Contract Documents. The Contractor shall cause such services or certifications to be provided by a properly licensed design professional, whose signature and seal shall appear on all drawings, calculations, specifications, certifications, Shop Drawings, and other submittals prepared by such professional. Shop Drawings and other submittals related to the Work designed or certified by such professional, if prepared by others, shall bear such professional's written approval when submitted to the Architect. The Owner and the Architect shall be entitled to rely upon the adequacy, accuracy, and completeness of the services, certifications and approvals performed or provided by such design professionals, provided the Owner and Architect have specified to the Contractor the performance and design

AIA Document A201™ – 2017. Copyright © 1911, 1915, 1918, 1925, 1937, 1951, 1958, 1961, 1963, 1966, 1970, 1976, 1987, 1997, 2007 and 2017 by The American Institute of Architects. **All rights reserved**. **WARNING: This AIA® Document is protected by U.S. Copyright Law and International Treaties. Unauthorized reproduction or distribution of this AIA® Document, or any portion of it, may result in severe civil and criminal penalties, and will be prosecuted to the maximum extent possible under the law.** This draft was produced by AIA software at 09:01:33 ET on 01/02/2019 under Order No.4449788754 which expires on 04/27/2019, and is not for resale.
User Notes: (1984719719)

criteria that such services must satisfy. Pursuant to this Section 3.12.10, the Architect will review, approve or take other appropriate action on submittals only for the limited purpose of checking for conformance with information given and the design concept expressed in the Contract Documents.

§ 3.12.10.2 If the Contract Documents require the Contractor's design professional to certify that the Work has been performed in accordance with the design criteria, the Contractor shall furnish such certifications to the Architect at the time and in the form specified by the Architect.

§ 3.12.11 See Specifications for additional information on Shop Drawings.

§ 3.13 Use of Site

§ 3.13.1 The Contractor shall confine operations at the Project site to areas permitted by applicable laws, statutes, ordinances, codes, rules and regulations, lawful orders of public authorities, and the Contract Documents and shall not unreasonably encumber the site with materials or equipment.

§ 3.13.2 Nothing contained in the Contract Documents shall be interpreted as giving the Contractor exclusive use of the Project site.

§ 3.13.3 The performance of the Work shall not impede the Owner's normal, continuous, and safe use and operation of its roadways and buildings in and around the Project site. If it appears that the performance of the Work will impede such use and operation, the timing and manner of the performance of the Work shall be subject to the approval of the Owner.

§ 3.13.4 The Contractor shall comply with the following procedures when working in occupied areas including classrooms, hallways, and office spaces.

§ 3.13.4.1 The Contractor shall notify the Owner two (2) days prior to commencing Work in an occupied area. This notification shall include a detailed description of the Work to be performed in the occupied area.

§ 3.13.4.2 There shall be no overhead Work (e.g. demolition, HVAC ductwork, and/or electrical) performed directly over occupied areas.

§ 3.13.5 The Contractor shall produce a site logistics plan for the Owner's review and approval before beginning operations on the Project site. This document shall be updated and submitted to the Owner on a periodic basis as required by the Owner. No deviations from this plan will be allowed without the prior approval of the Owner.

§ 3.14 Cutting and Patching

§ 3.14.1 The Contractor shall be responsible for cutting, fitting or patching required to complete the Work or to make its parts fit together properly. All areas requiring cutting, fitting, or patching shall be restored to the condition existing prior to the cutting, fitting, or patching, unless otherwise required by the Contract Documents.

§ 3.14.2 The Contractor shall not damage or endanger a portion of the Work or fully or partially completed construction of the Owner or Separate Contractors by cutting, patching, or otherwise altering such construction, or by excavation. The Contractor shall not cut or otherwise alter construction by the Owner or a Separate Contractor except with written consent of the Owner and of the Separate Contractor. Consent shall not be unreasonably withheld. The Contractor shall not unreasonably withhold, from the Owner or a Separate Contractor, its consent to cutting or otherwise altering the Work.

§ 3.14.3 Unless authorized in writing by the Architect, structural elements of the Work shall not be cut, patched, or otherwise altered or repaired. Existing Work that is cut, damaged, disturbed or otherwise interfered with by the Contractor, a Subcontractor, Sub-subcontractor or anyone for whom any of them is responsible, shall be fully, properly, and carefully repaired by the responsible Contractor, Subcontractor or Sub-subcontractor. All such repairs shall be completed to the satisfaction of the Architect, and shall match similar existing adjoining work.

AIA Document A201™ – 2017. Copyright © 1911, 1915, 1918, 1925, 1937, 1951, 1958, 1961, 1963, 1966, 1970, 1976, 1987, 1997, 2007 and 2017 by The American Institute of Architects. **All rights reserved. WARNING: This AIA® Document is protected by U.S. Copyright Law and International Treaties. Unauthorized reproduction or distribution of this AIA® Document, or any portion of it, may result in severe civil and criminal penalties, and will be prosecuted to the maximum extent possible under the law.** This draft was produced by AIA software at 09:01:33 ET on 01/02/2019 under Order No.4449788754 which expires on 04/27/2019, and is not for resale.
User Notes: (1984719719)

§ 3.14.4 See Specifications for additional information on Cutting and Patching.

§ 3.15 Cleaning Up

§ 3.15.1 The Contractor shall keep the premises and surrounding area and roadways free from accumulation of waste materials and rubbish caused by operations under the Contract. At completion of the Work, the Contractor shall remove waste materials, rubbish, the Contractor's tools, construction equipment, machinery, and surplus materials and shall clean and/or remove all stains, spots, marks, blemishes, foreign matter and dirt from surfaces of the Work and from other surfaces not a part of the Work but where such conditions resulted from the Contractor's operations from and about the Project.

§ 3.15.2 If the Contractor fails to clean up as provided in the Contract Documents, the Owner may do so and the Owner shall be entitled to reimbursement from the Contractor.

§ 3.16 Access to Work

The Contractor shall provide the Owner and Architect with access to the Work in preparation and progress wherever located.

§ 3.17 Royalties, Patents and Copyrights

The Contractor shall pay all royalties and license fees. The Contractor shall defend suits or claims for infringement of copyrights and patent rights and shall hold the Owner and Architect harmless from loss on account thereof, but shall not be responsible for defense or loss when a particular design, process or product of a particular manufacturer or manufacturers is required by the Contract Documents, or where the copyright violations are contained in Drawings, Specifications or other documents prepared by the Owner or Architect. However, if the Contractor has reason to believe that the required design, process or product is an infringement of a copyright or patent or such infringement is discovered by, or made known to, the Contractor, the Contractor shall be responsible for the loss unless the information is promptly furnished to the Architect. In the event of legal action arising out of such infringement for which the Contractor is responsible and which action has the effect of stopping the Work, the Owner may require the Contractor to substitute other products of like kind as will make it possible to pursue and complete the Work. Costs and expenses caused thereby shall be borne by the Contractor.

§ 3.18 Indemnification

§ 3.18.1 To the fullest extent permitted by law the Contractor shall defend, indemnify and hold harmless the Owner, Architect, Architect's consultants, and agents and employees of any of them from and against claims, damages, losses and expenses, including but not limited to attorneys' fees, arising out of or resulting from performance of the Work, provided that such claim, damage, loss or expense is attributable to bodily injury, sickness, disease or death, or to injury to or destruction of tangible property (other than the Work itself), but only to the extent caused by the willful, wanton or negligent acts or omissions of the Contractor, a Subcontractor, Sub-subcontractor, anyone directly or indirectly employed by them or anyone for whose acts they may be liable, regardless of whether or not such claim, damage, loss or expense is caused in part by a party indemnified hereunder. Such obligation shall not be construed to negate, abridge, or reduce other rights or obligations of indemnity which would otherwise exist as to a party or person described in this Section 3.18. Nothing in this Section shall be construed as obligating the Contractor to indemnify or hold harmless any of the parties indemnified hereunder against liability for damage arising out of bodily injury to persons or damage to property caused by or resulting from the negligence of any such indemnified party, or such party's agents or employees.

§ 3.18.2 In claims against any person or entity indemnified under this Section 3.18 by an employee of the Contractor, a Subcontractor, Sub-subcontractor, anyone directly or indirectly employed by them or anyone for whose acts they may be liable, the indemnification obligation under Section 3.18.1 shall not be limited by a limitation on amount or type of damages, compensation or benefits payable by or for the Contractor, a Subcontractor or Sub-subcontractor under workers' compensation acts, disability benefit acts or other employee benefit acts.

§ 3.18.3 Additional Indemnification Obligations

AIA Document A201™ – 2017. Copyright © 1911, 1915, 1918, 1925, 1937, 1951, 1958, 1961, 1963, 1966, 1970, 1976, 1987, 1997, 2007 and 2017 by The American Institute of Architects. **All rights reserved.** **WARNING: This AIA® Document is protected by U.S. Copyright Law and International Treaties. Unauthorized reproduction or distribution of this AIA® Document, or any portion of it, may result in severe civil and criminal penalties, and will be prosecuted to the maximum extent possible under the law.** This draft was produced by AIA software at 09:01:33 ET on 01/02/2019 under Order No.4449788754 which expires on 04/27/2019, and is not for resale.
User Notes: (1984719719)

§ 3.18.3.1 The Contractor shall defend, indemnify and hold harmless the Owner, the Architect, and the Architect's consultants and their agents and employees from and against all claims, damages, losses, including, but not limited to, attorneys' fees, arising out of or resulting from any type of pollution and/or environmental impairment into or upon the land, the atmosphere, or any course or body of water that is above or below ground, which is caused by any negligent or willful or wanton act or omission of the Contractor, Subcontractors, Sub-subcontractors or anyone directly or indirectly employed by any of them or anyone for whose acts any of them may be liable.

§ 3.18.3.2 The Contractor shall defend, indemnify and hold harmless the Owner, the Architect, and the Architect's consultants, and the agents and employees of any of them from and against all claims, damages, losses, including, but not limited to, attorneys' fees, arising out of or resulting from any acts of Contractor, Subcontractors, Sub-subcontractors or anyone directly or indirectly employed by any of them or anyone for whose acts any of them may be liable that are outside of the Contract Specifications, and without the supervision or direction of the Owner, its Architects and Engineers.

§ 3.18.3.3 The Contractor shall defend, indemnify and hold harmless the Owner, the Architect, and the Architect's consultants, and the agents and employees of any of them from and against all claims, damages, losses, and expenses including, but not limited to, attorneys' fees, arising out of or resulting from the misuse or malfunction of any equipment rented, owned, or leased by the Contractor, any Subcontractor, Sub-subcontractor or anyone directly or indirectly employed by any of them or anyone for whose acts they may be liable.

§ 3.18.3.4 Nothing in Section 3.18.3 shall be construed as obligating the Contractor to indemnify or hold harmless any of the parties indemnified hereunder against liability for damage arising out of bodily injury to persons or damage to property caused by or resulting from the negligence of any such indemnified party, or such party's agents or employees.

§ 3.18.3.5 The Owner assumes no responsibility or liability from loss or damage to the Contractor's equipment, materials, or supplies.

§ 3.19 The Contractor shall obtain and maintain at its expense such general liability insurance coverage as will insure its indemnification obligations under Section 3.18 and any other contractual indemnity obligations assumed by the Contractor under the Contract Documents.

ARTICLE 4 ARCHITECT

§ 4.1 General

§ 4.1.1 The Architect is the person or entity retained by the Owner pursuant to Section 2.3.2 and identified as such in the Agreement.

§ 4.1.2 Duties, responsibilities, and limitations of authority of the Architect as set forth in the Contract Documents shall not be restricted, modified, or extended without written consent of the Owner, Contractor, and Architect. Consent shall not be unreasonably withheld.

§ 4.2 Administration of the Contract

§ 4.2.1 The Architect will provide administration of the Contract as described in the Contract Documents and will be an Owner's representative during construction until the date the Architect issues the final Certificate for Payment. The Architect will have authority to act on behalf of the Owner only to the extent provided in the Contract Documents.

§ 4.2.2 The Architect will visit the site at intervals appropriate to the stage of construction, or as otherwise agreed with the Owner, to become generally familiar with the progress and quality of the portion of the Work completed, and to determine in general if the Work observed is being performed in a manner indicating that such portion of the Work is, and when the Work is fully completed the entirety of the Work will be, in accordance with the Contract Documents. However, the Architect will not be required to make exhaustive or continuous on-site inspections to check the quality or quantity of the Work. The Architect will not have control over, charge of, or responsibility for, the construction means, methods, techniques, sequences or

AIA Document A201™ – 2017. Copyright © 1911, 1915, 1918, 1925, 1937, 1951, 1958, 1961, 1963, 1966, 1970, 1976, 1987, 1997, 2007 and 2017 by The American Institute of Architects. **All rights reserved.** **WARNING: This AIA® Document is protected by U.S. Copyright Law and International Treaties. Unauthorized reproduction or distribution of this AIA® Document, or any portion of it, may result in severe civil and criminal penalties, and will be prosecuted to the maximum extent possible under the law.** This draft was produced by AIA software at 09:01:33 ET on 01/02/2019 under Order No.4449788754 which expires on 04/27/2019, and is not for resale.
User Notes: (1984719719)

procedures, or for the safety precautions and programs in connection with the Work, since these are solely the Contractor's rights and responsibilities under the Contract Documents.

§ 4.2.2.1 Where it is stated in the Contract Documents that the Contractor shall pay for or reimburse the Owner for services of the Architect, such payment shall be at a rate of two and one half (2.5) times the Architect's Direct Personnel Expense plus any expenses incurred in providing such services. Direct Personnel Expense is defined as the direct salaries of the Architect's personnel engaged on the Project and the portion of the cost of their mandatory and customary contributions and benefits related thereto, such as employment taxes and other statutory employee benefits, insurance, sick leave, holidays, vacations, pensions, and similar contribution and benefits.

§ 4.2.3 On the basis of the site visits, the Architect will keep the Owner reasonably informed about the progress and quality of the portion of the Work completed, and promptly report to the Owner (1) known deviations from the Contract Documents; (2) known deviations from the most recent construction schedule submitted by the Contractor; and (3) defects and deficiencies observed in the Work. The Architect will not be responsible for the Contractor's failure to perform the Work in accordance with the requirements of the Contract Documents. The Architect will not have control over or charge of and will not be responsible for acts or omissions of the Contractor, Subcontractors, or their agents or employees, or any other persons or entities performing portions of the Work.

§ 4.2.4 Communications

Owner and Contractor shall include the Architect in all communications that relate to or affect the Architect's services or professional responsibilities. The Owner shall promptly notify the Architect of the substance of any direct communications between the Owner and the Contractor otherwise relating to the Project. Communications by and with the Architect's consultants shall be through the Architect. Communications by and with Subcontractors and suppliers shall be through the Contractor. Communications by and with Separate Contractors shall be through the Owner. The Contract Documents may specify other communication protocols.

§ 4.2.5 Based on the Architect's evaluations of the Contractor's Applications for Payment, the Architect will review and certify the amounts due the Contractor and will issue Certificates for Payment in such amounts.

§ 4.2.6 Each of the Owner and the Architect has authority to reject Work that does not conform to the Contract Documents. Whenever the Owner or the Architect considers it necessary or advisable for implementation of the intent of the Contract Documents, the Owner or the Architect, as applicable, will have authority to require additional inspection or testing of the Work in accordance with Sections 13.4.2 and 13.4.3, whether or not such Work is fabricated, installed or completed. The Architect shall advise and assist the Owner in performing any of the functions set forth in this Section that are performed by the Owner.

§ 4.2.7 The Architect will review and approve, or take other appropriate action upon, the Contractor's submittals such as Shop Drawings, Product Data, and Samples, but only for the limited purpose of checking for conformance with information given and the design concept expressed in the Contract Documents. The Architect's action will be taken in accordance with the submittal schedule approved by the Architect or, in the absence of an approved submittal schedule, with reasonable promptness while allowing sufficient time in the Architect's professional judgment to permit adequate review. Review of such submittals is not conducted for the purpose of determining the accuracy and completeness of other details such as dimensions and quantities, or for substantiating instructions for installation or performance of equipment or systems, all of which remain the responsibility of the Contractor as required by the Contract Documents. The Architect's review of the Contractor's submittals shall not relieve the Contractor of the obligations under Sections 3.3, 3.5, and 3.12. The Architect's review shall not constitute approval of safety precautions or of any construction means, methods, techniques, sequences, or procedures. The Architect's approval of a specific item shall not indicate approval of an assembly of which the item is a component.

§ 4.2.8 The Owner or the Architect will prepare Change Orders and Construction Change Directives and may order minor changes in the Work as provided in Section 7.4.

AIA Document A201™ – 2017. Copyright © 1911, 1915, 1918, 1925, 1937, 1951, 1958, 1961, 1963, 1966, 1970, 1976, 1987, 1997, 2007 and 2017 by The American Institute of Architects. **All rights reserved.** **WARNING: This AIA® Document is protected by U.S. Copyright Law and International Treaties. Unauthorized reproduction or distribution of this AIA® Document, or any portion of it, may result in severe civil and criminal penalties, and will be prosecuted to the maximum extent possible under the law.** This draft was produced by AIA software at 09:01:33 ET on 01/02/2019 under Order No.4449788754 which expires on 04/27/2019, and is not for resale.
User Notes: (1984719719)

§ 4.2.9 The Architect will conduct inspections to determine the date or dates of Substantial Completion and the date of final completion; issue Certificates of Substantial Completion pursuant to Section 9.8; receive and forward to the Owner, for the Owner's review and records, written warranties and related documents required by the Contract and assembled by the Contractor pursuant to Section 9.10; and issue a final Certificate for Payment pursuant to Section 9.10. The undertaking of inspections by the Architect is not to be construed as supervision of construction activities nor an assumption by the Architect of any responsibility for job site safety for the performance of Work.

§ 4.2.10 Not Used.

§ 4.2.11 The Architect will interpret and decide matters concerning performance under, and requirements of, the Contract Documents on written request of either the Owner or Contractor. The Architect's response to such requests will be made in writing within any time limits agreed upon provided that, if not agreed otherwise, the Architect shall respond to such requests within fifteen (15) days after Architect's receipt of such request. If such written request is made of the Architect, and the Owner or the Contractor disagrees with the Architect's response to such request, the matter shall be submitted to the Initial Decision Maker pursuant to Article 15.

§ 4.2.12 Interpretations and decisions of the Architect will be consistent with the intent of, and reasonably inferable from, the Contract Documents and will be in writing or in the form of drawings. When making such interpretations and decisions, the Architect will endeavor to secure faithful performance by both Owner and Contractor, will not show partiality to either and will not be liable for results of interpretations or decisions rendered in good faith.

§ 4.2.13 The decision of the Owner, in consultation with the Architect, on matters relating to aesthetic effect will be final if consistent with the intent expressed in the Contract Documents.

§ 4.2.14 The Architect will review and respond to requests for information about the Contract Documents. The Architect's response to such requests will be made in writing within any time limits agreed upon provided that, unless agreed otherwise, the Architect shall respond to such requests within fifteen days after Architect's receipt of such request. If appropriate, the Architect will prepare and issue supplemental Drawings and Specifications in response to the requests for information.

ARTICLE 5 SUBCONTRACTORS

§ 5.1 Definitions

§ 5.1.1 A Subcontractor is a person or entity who has a direct contract with the Contractor to perform a portion of the Work at the site. The term "Subcontractor" is referred to throughout the Contract Documents as if singular in number and means a Subcontractor or an authorized representative of the Subcontractor. The term "Subcontractor" does not include a Separate Contractor or the subcontractors of a Separate Contractor.

§ 5.1.2 A Sub-subcontractor is a person or entity who has a direct or indirect contract with a Subcontractor to perform a portion of the Work at the site and, unless otherwise expressly indicated, refers to subcontractors of all tiers performing any part of the Work (other than Subcontractors). The term "Sub-subcontractor" is referred to throughout the Contract Documents as if singular in number and means a Sub-subcontractor or an authorized representative of the Sub-subcontractor.

§ 5.2 Award of Subcontracts and Other Contracts for Portions of the Work

§ 5.2.1 Unless otherwise stated in the Contract Documents, the Contractor, as soon as practicable, but in no event more than ten days after the Owner's execution of the Contract (or such shorter period of time as required by applicable law), shall notify the Owner and Architect of the names, addresses, Connecticut Tax Registration numbers, and Federal Employer Identification numbers (or social security numbers as to individuals) of the persons or entities proposed for each principal portion of the Work, including those who are to furnish materials or equipment fabricated to a special design. Within fourteen days of receipt of the information, the Architect or Owner may notify the Contractor whether the Owner or the Architect (1) has reasonable objection to any such proposed person or entity; or (2) requires additional time for review. Failure of the Architect or Owner to provide notice within the fourteen-day period shall constitute notice of no

AIA Document A201™ – 2017. Copyright © 1911, 1915, 1918, 1925, 1937, 1951, 1958, 1961, 1963, 1966, 1970, 1976, 1987, 1997, 2007 and 2017 by The American Institute of Architects. **All rights reserved.** **WARNING: This AIA® Document is protected by U.S. Copyright Law and International Treaties. Unauthorized reproduction or distribution of this AIA® Document, or any portion of it, may result in severe civil and criminal penalties, and will be prosecuted to the maximum extent possible under the law.** This draft was produced by AIA software at 09:01:33 ET on 01/02/2019 under Order No.4449788754 which expires on 04/27/2019, and is not for resale.
User Notes: (1984719719)

reasonable objection.

§ 5.2.2 The Contractor shall not contract with a proposed person or entity to whom the Owner or Architect has made reasonable and timely objection.

§ 5.2.2.1 The Contractor shall not contract with a person or entity who appears on the State of Connecticut Debarment List, the Federal Davis Bacon Act Debarment List, both of which are available through:

http://www.ctdol.state.ct.us/

or the Federal List of Excluded Parties Listing System available through http://epls.arnet.gov/

§ 5.2.3 If the Owner or Architect has reasonable objection to a person or entity proposed by the Contractor, the Contractor shall propose another to whom the Owner or Architect has no reasonable objection. If the proposed but rejected Subcontractor was reasonably capable of performing the Work and is not ineligible to be contracted with in accordance with Section 5.2.2.1, the Contract Sum shall be increased or decreased by the difference, if any, occasioned by such change, and an appropriate Change Order shall be issued before commencement of the substitute Subcontractor's Work. However, no increase in the Contract Sum shall be allowed for such change unless the Contractor has acted promptly and responsively in submitting names as required.

§ 5.2.4 The Contractor shall not substitute a Subcontractor, person or entity (including those who are to furnish materials or equipment fabricated to a special design) for one previously selected if the Owner or Architect makes reasonable objection to such substitution.

§ 5.2.5 If requested by the Owner, the Contractor shall provide to the Owner copies of all subcontracts and supply agreements entered into by the Contractor for the Work.

§ 5.2.6 The Contractor shall comply with its obligations under Connecticut General Statutes §4b-93 and §4b-96 including, without limitation and as applicable, its obligation to contract with those Subcontractors identified in the Contractor's bid for the Project to perform the (1) masonry, (2) electrical, (3) plumbing, and (4) heating, ventilating and air conditioning (HVAC) components of the Work and to timely provide copies to the Owner of the executed subcontracts in accordance with the requirements of Connecticut General Statutes §4b-96.

§ 5.2.7 All subcontracts shall comply with the requirements of Connecticut General Statutes §4b-96 and shall be in the form provided by the Owner. The Contractor may supplement the terms and conditions set forth in the Owner supplied form of subcontract by attachment of additional terms and conditions thereto provided such supplemental terms and conditions are not inconsistent or in conflict with the requirements of CGS §4b-96. In the event of any such conflict or inconsistency, the provisions of the form of subcontract set forth in CGS §4b-96 shall prevail and control.

§ 5.3 Subcontractual Relations

§ 5.3.1 By appropriate written agreement, the Contractor shall require each Subcontractor, to the extent of the Work to be performed by the Subcontractor, to be bound to the Contractor by terms of the Contract Documents, and to assume toward the Contractor all the obligations and responsibilities, including the responsibility for safety of the Subcontractor's Work that the Contractor, by these Contract Documents, assumes toward the Owner and Architect. Each subcontract agreement shall preserve and protect the rights of the Owner and Architect under the Contract Documents with respect to the Work to be performed by the Subcontractor so that subcontracting thereof will not prejudice such rights, and shall allow to the Subcontractor, unless specifically provided otherwise in the subcontract agreement, the benefit of all rights, remedies and redress against the Contractor that the Contractor, by the Contract Documents, has against the Owner. Where appropriate, the Contractor shall require each Subcontractor to enter into similar agreements with Sub-subcontractors. The Contractor shall make available to each proposed Subcontractor, prior to the execution of the subcontract agreement, copies of the Contract Documents to which the Subcontractor will be bound, and, upon written request of the Subcontractor, identify to the Subcontractor terms and conditions of

AIA Document A201™ – 2017. Copyright © 1911, 1915, 1918, 1925, 1937, 1951, 1958, 1961, 1963, 1966, 1970, 1976, 1987, 1997, 2007 and 2017 by The American Institute of Architects. **All rights reserved.** **WARNING: This AIA® Document is protected by U.S. Copyright Law and International Treaties. Unauthorized reproduction or distribution of this AIA® Document, or any portion of it, may result in severe civil and criminal penalties, and will be prosecuted to the maximum extent possible under the law.** This draft was produced by AIA software at 09:01:33 ET on 01/02/2019 under Order No.4449788754 which expires on 04/27/2019, and is not for resale.
User Notes: (1984719719)

the proposed subcontract agreement that may be at variance with the Contract Documents. Subcontractors will similarly make copies of applicable portions of such documents available to their respective proposed Sub-subcontractors.

§ 5.4 Contingent Assignment of Subcontracts

§ 5.4.1 Each subcontract for a portion of the Work is assigned by the Contractor to the Owner, provided that

.1 assignment is effective only after termination of the Contract by the Owner pursuant to Article 14 and only for those subcontracts that the Owner accepts by notifying the Subcontractor and Contractor; and

.2 assignment is subject to the prior rights of the surety, if any, obligated under bond relating to the Contract.

When the Owner accepts the assignment of a subcontract, the Owner assumes the Contractor's rights and obligations under the subcontract but only to the extent arising subsequent to the effective date of the assignment and related to Work not yet performed. Contractor agrees to execute any and all other documents reasonably required to effect the assignment.

§ 5.4.2 Upon such assignment, if the Work has been suspended for more than sixty (60) days, the Subcontractor's compensation shall be equitably adjusted for increases in cost resulting from the suspension.

§ 5.4.3 Upon assignment to the Owner under this Section 5.4, the Owner may further assign the subcontract to a successor contractor or other entity.

§ 5.4.4 The Contractor shall promptly, but in any event not later than ten (10) days after obtaining knowledge thereof, advise the Owner in writing of any claim or demand by a Subcontractor claiming that any amount is due to such Subcontractor or claiming any default by the Contractor in any of its obligations to such Subcontractor.

ARTICLE 6 CONSTRUCTION BY OWNER OR BY SEPARATE CONTRACTORS

§ 6.1 Owner's Right to Perform Construction and to Award Separate Contracts

§ 6.1.1 The term "Separate Contractor(s)" shall mean other contractors retained by the Owner under separate agreements. The Owner reserves the right to perform construction or operations related to the Project with the Owner's own forces, and with Separate Contractors retained under Conditions of the Contract substantially similar to those of this Contract, including those provisions of the Conditions of the Contract related to insurance and waiver of subrogation.

§ 6.1.2 When separate contracts are awarded for different portions of the Project or other construction or operations on the site, the term "Contractor" in the Contract Documents in each case shall mean the Contractor who executes each separate Owner-Contractor Agreement.

§ 6.1.3 The Owner shall provide for coordination of the activities of the Owner's own forces and of each Separate Contractor with the Work of the Contractor, who shall cooperate with them. The Contractor shall participate with any Separate Contractors and the Owner in reviewing their construction schedules and construction requirements. The Contractor shall make any revisions to its construction schedule deemed necessary after a joint review and mutual agreement between the Owner and Contractor. The construction schedules shall then constitute the schedules to be used by the Contractor, Separate Contractors, and the Owner until subsequently revised.

§ 6.1.4 Unless otherwise provided in the Contract Documents, when the Owner performs construction or operations related to the Project with the Owner's own forces or with Separate Contractors, the Owner or its Separate Contractors shall have the same obligations and rights that the Contractor has under these General Conditions, including, without excluding others, those stated in Article 3, this Article 6, and Articles 10, 11, and 12.

§ 6.2 Mutual Responsibility

§ 6.2.1 The Contractor shall afford the Owner and Separate Contractors reasonable opportunity for

AIA Document A201™ – 2017. Copyright © 1911, 1915, 1918, 1925, 1937, 1951, 1958, 1961, 1963, 1966, 1970, 1976, 1987, 1997, 2007 and 2017 by The American Institute of Architects. **All rights reserved**. **WARNING: This AIA® Document is protected by U.S. Copyright Law and International Treaties. Unauthorized reproduction or distribution of this AIA® Document, or any portion of it, may result in severe civil and criminal penalties, and will be prosecuted to the maximum extent possible under the law.** This draft was produced by AIA software at 09:01:33 ET on 01/02/2019 under Order No.4449788754 which expires on 04/27/2019, and is not for resale.
User Notes: (1984719719)

introduction and storage of their materials and equipment and performance of their activities, and shall connect and coordinate the Contractor's construction and operations with theirs as required by the Contract Documents.

§ 6.2.2 If part of the Contractor's Work depends for proper execution or results upon construction or operations by the Owner or a Separate Contractor, the Contractor shall, prior to proceeding with that portion of the Work, promptly notify the Architect of apparent discrepancies or defects in the construction or operations by the Owner or Separate Contractor that would render it unsuitable for proper execution and results of the Contractor's Work. Failure of the Contractor to notify the Architect of apparent discrepancies or defects prior to proceeding with the Work shall constitute an acknowledgment that the Owner's or Separate Contractor's completed or partially completed construction is fit and proper to receive the Contractor's Work. The Contractor shall not be responsible for discrepancies or defects in the construction or operations by the Owner or Separate Contractor that are not apparent. If the performance of any part of a Contractor's Work depends on proper and timely execution or relies upon the interphasing or coordinating of the work of any Separate Contractor or the Owner, the Contractor shall allow for this interrelationship in the planning and performance of the Contractor's Work, without interference with the work of any Separate Contractor or the Owner.

§ 6.2.3 The Contractor shall reimburse the Owner for costs the Owner incurs that are payable to a Separate Contractor because of the Contractor's delays, improperly timed activities or defective construction (collectively and individually, "Interference"). The Owner shall have the right to off-set such costs against any amounts owed to the Contractor by the Owner to the extent related to the Project. The Owner shall be responsible to the Contractor for costs the Contractor incurs because of a Separate Contractor's Interference but only as regards Interference by Separate Contractors whose work was not identified in the Contract Documents as work to be performed by Separate Contractors.

§ 6.2.4 The Contractor shall promptly remedy the damage that the Contractor wrongfully causes to completed or partially completed construction or to the property of the Owner or Separate Contractor as provided in Section 10.2.5.

§ 6.2.5 The Owner and each Separate Contractor shall have the same responsibilities for cutting and patching as are described for the Contractor in Section 3.14.

§6.2.6 Upon the Owner's request, the Contractor shall defend any proceedings brought against the Owner by any Separate Contractor on account of any damage alleged to have been caused by the Contractor which arises from the Contractor's failure to comply with the terms and conditions of this Section 6.2.

§ 6.3 Owner's Right to Clean Up

If a dispute arises among the Contractor, Separate Contractors, and the Owner as to the responsibility under their respective contracts for maintaining the premises and surrounding area free from waste materials and rubbish, the Owner may clean up and the Owner will allocate the cost among those responsible.

ARTICLE 7 CHANGES IN THE WORK

§ 7.1 General

§ 7.1.1 Changes in the Work may be accomplished after execution of the Contract, and without invalidating the Contract, by Change Order, Construction Change Directive or order for a minor change in the Work, subject to the limitations stated in this Article 7 and elsewhere in the Contract Documents.

§ 7.1.2 A Change Order shall be based upon agreement among the Owner, Contractor and Architect. A Construction Change Directive is a directive by the Owner that may or may not be agreed to by the Contractor. All changes to the Work shall be approved by the Owner. Except as permitted in Section 7.3, a change in the Contract Sum or the Contract Time shall be accomplished only by Change Order. Accordingly, no course of conduct or dealings between the parties, nor express or implied acceptance of alterations or additions to the Work, and no claim that the Owner has been unjustly enriched by any alterations or additions to the Work, whether or not there is, in fact, any unjust enrichment, shall be the basis for any claim for an increase in the Contract Sum, an extension of the Contract Time, or a change in any

AIA Document A201™ – 2017. Copyright © 1911, 1915, 1918, 1925, 1937, 1951, 1958, 1961, 1963, 1966, 1970, 1976, 1987, 1997, 2007 and 2017 by The American Institute of Architects. **All rights reserved.** **WARNING: This AIA® Document is protected by U.S. Copyright Law and International Treaties. Unauthorized reproduction or distribution of this AIA® Document, or any portion of it, may result in severe civil and criminal penalties, and will be prosecuted to the maximum extent possible under the law.** This draft was produced by AIA software at 09:01:33 ET on 01/02/2019 under Order No.4449788754 which expires on 04/27/2019, and is not for resale.
User Notes: (1984719719)

time period provided for in the Contract Documents.

§ 7.1.3 Changes in the Work shall be performed under applicable provisions of the Contract Documents. The Contractor shall proceed promptly with changes in the Work, unless otherwise provided in the Change Order, Construction Change Directive, or order for a minor change in the Work.

§ 7.2 Change Orders

§ 7.2.1 A Change Order is a written instrument prepared by the Owner or Architect and signed by the Owner, Contractor and Architect stating their agreement upon all of the following:

.1 The change in the Work;
.2 The amount of the adjustment, if any, in the Contract Sum; and
.3 The extent of the adjustment, if any, in the Contract Time.

There shall be no extension in the Contract Time unless the Contractor can effectively demonstrate that the Work delayed is on the critical path of the approved construction schedule as provided in Division 1 of the Specifications and in Section 8.3 of these General Conditions.

The signature of the Architect on the Change Order signifies that the Architect has reviewed the proposed Change Order, with accompanied breakdowns and subcontractor's change proposals, for appropriate quantities and unit costs and recommends approval of the proposed Change Order. The Architect's signature is not necessary in order for the Change Order to constitute a modification to the Contract which binds the Owner and the Contractor if the Contractor and the Owner have both signed the Change Order.

§ 7.2.2 Change Order Cost Components

The Contractor's proposal for a Change Order shall be itemized completely, submitted in a detailed format acceptable to the Owner, and shall include the following itemized cost components, as applicable:

§ 7.2.2.1 Engineered Equipment and Materials:

Costs for Engineered Equipment and Materials included in any Change Order shall be considered all-inclusive of the purchase cost thereof including all freight costs, purchasing services, expediting, and inspections and shall be substantiated by manufacturer and supplier quotes subject to review and approval by the Owner. Engineered Equipment shall be defined as equipment to be incorporated into and become a permanent part of the completed installation specified in the Contract Documents. Materials shall be defined as construction materials that become incorporated into and become a permanent part of the completed installation.

§ 7.2.2.2 Direct Field Labor Hours:

Direct labor work hours included in any Change Order shall be itemized indicating the direct labor hours to be expended in the actual installation of Engineered Equipment and Materials. The quantity of hours shall be based upon the Contractor's estimate to complete the subject Work based upon actual field conditions and shall be subject to review and approval by the Owner.

§ 7.2.2.3 Direct Field Labor Costs:

Direct field labor costs are defined as the costs of the direct labor required for the actual installation of Engineered Equipment and Materials. Direct field labor costs shall be based on the Contractor's direct field labor rates, which rates are subject to review and approval by the Owner and which rates shall be substantiated by a detailed direct labor cost breakdown with associated back-up support in a form acceptable to the Owner. The Contractor's direct field labor rates may include hourly labor classifications for foremen, journeymen, apprentices, laborers, etc. Direct field labor rates may include the Contractor's direct labor payroll costs including social security, unemployment (federal and state), workers' compensation insurance, fringe benefits, and any other identified costs directly related to direct labor.

If the Project is subject to prevailing wage rates, no wage rate above the prevailing rate shall be allowed unless such wage rate is substantiated by documentation of actual wages paid in accordance with such wage rate except in the case where the Contractor's wage rates were submitted to and accepted by the Owner as a condition of the Contract.

AIA Document A201™ – 2017. Copyright © 1911, 1915, 1918, 1925, 1937, 1951, 1958, 1961, 1963, 1966, 1970, 1976, 1987, 1997, 2007 and 2017 by The American Institute of Architects. **All rights reserved.** **WARNING: This AIA® Document is protected by U.S. Copyright Law and International Treaties. Unauthorized reproduction or distribution of this AIA® Document, or any portion of it, may result in severe civil and criminal penalties, and will be prosecuted to the maximum extent possible under the law.** This draft was produced by AIA software at 09:01:33 ET on 01/02/2019 under Order No.4449788754 which expires on 04/27/2019, and is not for resale.
User Notes: (1984719719)

§ 7.2.2.4 Construction Equipment and Tool Rental:
Costs associated with Contractor owned or rented construction equipment and major tools used in the performance of the Work may be included as part of the cost of a Change Order if it is demonstrated to the Owner's satisfaction that such costs are valid and related to the change in the Work which is the subject of the Change Order. Major tools shall be defined as non-hand-held tools. Pricing rates for construction equipment and major tools shall be subject to Owner's review and approval. Costs for specialized construction equipment not already on site shall be shown separately and shall require justification by the Contractor.

§ 7.2.2.5 Field Overheads (Indirects):
Field overhead (indirect) labor shall mean and include field (onsite) supervision (general foremen, field engineers). Costs for field overhead (indirect) labor shall be based on hourly rates which are subject to review and approval by the Owner. Such costs shall be allowed as part of the cost of a Change Order if it is demonstrated to the Owner's satisfaction that such costs are valid and arise as a direct result of the change in the Work which is the subject of the Change Order. All such costs shall be substantiated by supporting data submitted for review and approval by the Owner. Costs for specialized personnel or additional staff shall be shown separately and shall require justification by the Contractor.

Field Facilities shall mean and include the following:

1. Temporary offices (including office furniture, copiers, computers, printers, other office equipment, and supplies);
2. Temporary material storage (storage vans and containers, warehouse rental); and
3. Utilities (electricity, phones, data lines, restroom facilities).

Costs for Field Facilities, which are subject to the review and approval of the Owner, may only be included as part of the costs of a Change Order if (1) the Change Order includes an extension of the Contract Time which has been approved by the Owner in accordance with Section 8.3; or (2) the Contractor otherwise demonstrates to the Owner's satisfaction that such costs are valid and arise as a direct result of the change in Work which is the subject of the Change Order.

§ 7.2.2.6 As noted in Section 3.6, the Owner is a tax-exempt institution. The tax on materials or supplies exempted by the current regulations of the Department of Revenue Services shall not be included as a cost component of any Change Order or Change Order request/proposal.

§ 7.2.2.7 Subcontractors
Subcontractors shall adhere to the same contract requirements and shall utilize change order pricing methodology that is consistent with the Contract. The Contractor shall provide detailed Subcontractor cost proposals to substantiate all subcontractor pricing.

§ 7.2.2.8 General and Administrative Overhead (Home Office) Costs and Profit (Overhead and Profit)
Overhead and Profit shall cover the following:

1. All home office expenses;
2. Safety related items, including safety equipment, safety administration, and all related costs associated with the contractor's safety program;
3. Small tools, which are defined as construction tools with a value of up to $500;
4. Consumable materials, which are normally used in the execution of the Work and as may be further defined in the general conditions section of the Specifications;
5. Indirect costs as related to field administrative personnel (project manager, field safety supervisor, planners, estimators, office manager, secretarial services, document control);
6. Indirect costs as related to support staff;
7. Commercial General, Automobile, Umbrella, Aircraft and Contractor's Pollution Liability Insurance as described in Section 11.1.1;
8. Parking;
9. Safety;
10. Commissioning Requirements;

AIA Document A201™ – 2017. Copyright © 1911, 1915, 1918, 1925, 1937, 1951, 1958, 1961, 1963, 1966, 1970, 1976, 1987, 1997, 2007 and 2017 by The American Institute of Architects. **All rights reserved**. **WARNING: This AIA® Document is protected by U.S. Copyright Law and International Treaties. Unauthorized reproduction or distribution of this AIA® Document, or any portion of it, may result in severe civil and criminal penalties, and will be prosecuted to the maximum extent possible under the law.** This draft was produced by AIA software at 09:01:33 ET on 01/02/2019 under Order No.4449788754 which expires on 04/27/2019, and is not for resale.
User Notes: (1984719719)

11. Such other items as are commonly considered part of home office overhead;
12. Company vehicles, gas, mileage and travel time;
13. Union-related contributions and expenses;
14. Any training; and
15. Licenses.

§ 7.2.2.9 The amount to be included in a Change Order for Overhead and Profit shall be based on and limited to the markup percentages identified in the table below as applied to the total net increase in the direct costs of the Work which arises as a direct result of the change in the Work which is the subject of the Change Order.

Contractor/Subcontractor Combined Overhead and Profit Markup Table:	
Contractor markup on self-performed work	15%
Contractor markup on Subcontractor work.	5%
Subcontractor markup on self-performed work.	15%
Subcontractor markup on Work performed by Sub-subcontractors under contract with a Subcontractor.	5%
Markup on Work that is self-performed by a Sub-subcontractor under contract with a Subcontractor.	10%
Subcontractor markup on Sub-subcontractor work	0%
Sub-subcontractor markup on Work performed by lower tier Sub-subcontractors	0%

§ 7.2.2.10 Notwithstanding the foregoing, the aggregate markup for Overhead and Profit included in any Change Order shall not exceed twenty percent (20%) of the total net increase in the direct costs of the Work which arises as a direct result of the change in the Work which is the subject of the Change Order.

§ 7.2.2.11 Overtime, when specifically authorized by the Owner and not as an Extraordinary Measure (as defined in Section 8.2.3.2), shall be paid for by the Owner on the basis of premium payment only, plus the cost of insurance and taxes based on the premium payment period.

§ 7.2.2.12 For a change in the Work resulting in a net decrease in the direct cost of the Work, the Change Order will reflect a reduction in the Contract Sum of an amount equal to such net decrease as confirmed by the Owner. In the case where there are both increases and decreases in direct costs of the Work, Overhead and Profit included in the Change Order shall be figured on the basis of the net increase in costs, if any, with respect to that change.

§ 7.2.2.14 Bond Costs: Actual additional bond premiums assessed to the Contractor by the surety issuing the payment and performance bonds for the Project as a direct result of an increase in the Contract Sum reflected in the subject Change Order may be included as part of the costs of the Change Order only when supported by written documentation from the surety confirming that the Change Order requires an increase to the original payment and performance bonds. Any additional bond premiums to which Contractor would be entitled shall be addressed in a final Change Order with no additional fee or mark-up thereon.

§ 7.2.3 The Contractor shall submit proposals for Change Orders on the "Change Order Proposal Request Form" provided in Division 1of the Specifications or on a form and in a format otherwise acceptable to the Owner. In order to facilitate the Owner's review of quotations for extras or credits, all proposals, except those so minor that their propriety can be seen by inspection, shall be accompanied by a complete itemization of costs including labor, materials, unit prices, and Subcontracts. Subcontractor proposals shall be submitted in support of the Contractor's Change Order proposal and shall be similarly itemized.

§ 7.2.4 Alternates awarded by Change Order after Contract execution are not subject to Contractor,

AIA Document A201™ – 2017. Copyright © 1911, 1915, 1918, 1925, 1937, 1951, 1958, 1961, 1963, 1966, 1970, 1976, 1987, 1997, 2007 and 2017 by The American Institute of Architects. **All rights reserved.** **WARNING: This AIA® Document is protected by U.S. Copyright Law and International Treaties. Unauthorized reproduction or distribution of this AIA® Document, or any portion of it, may result in severe civil and criminal penalties, and will be prosecuted to the maximum extent possible under the law.** This draft was produced by AIA software at 09:01:33 ET on 01/02/2019 under Order No.4449788754 which expires on 04/27/2019, and is not for resale.
User Notes: (1984719719)

Subcontractor or Sub-subcontractor mark-up for Overhead and Profit.

§ 7.2.5 Agreement upon and execution of any Change Order shall constitute a final settlement of all matters relating to the change in the Work which is the subject of the Change Order, including, but not limited to, all direct and indirect costs associated with such change and any and all adjustments to the Contract Sum and the Contract Time. In the event a Change Order increases the Contract Sum, Contractor shall include the Work covered by such Change Orders in Applications for Payment as if such Work were originally part of the Contract Documents.

§ 7.2.6 Any percentage referred to hereafter for General Conditions, and/or Overhead and Profit included in the adjustment to the Contract Sum shall be applied to the costs of performing the Work attributable to the change as stated in 7.3.4.1 through 7.3.4.5. No markup shall be allowed for premiums on bonds and insurance.

§ 7.3 Construction Change Directives

§ 7.3.1 A Construction Change Directive is a written order prepared by the Owner or Architect and signed by the Owner and Architect, directing a change in the Work prior to agreement on adjustment, if any, in the Contract Sum or Contract Time, or both. The Owner may by Construction Change Directive, without invalidating the Contract, order changes in the Work within the general scope of the Contract consisting of additions, deletions or other revisions, the Contract Sum and Contract Time being adjusted accordingly. The signature of the Architect signifies that he has reviewed and recommends the change. However, if the Owner has signed the Change Directive the Architect's signature is not necessary in order for the Change Directive to be valid.

§ 7.3.2 A Construction Change Directive shall be used in the absence of total agreement on the terms of a Change Order.

§ 7.3.3 If the Construction Change Directive provides for a proposed adjustment to the Contract Sum, the adjustment shall be based on one of the following methods:

- **.1** Mutual acceptance of a lump sum properly itemized and supported by sufficient substantiating data to permit evaluation;
- **.2** Unit prices stated in the Contract Documents or subsequently agreed upon;
- **.3** Cost to be determined in a manner agreed upon by the parties and a mutually acceptable fixed or percentage fee;
- **.4** Time and materials subject to a not to exceed a stipulated price; or
- **.5** As provided in Section 7.3.4.

§ 7.3.4 If the Contractor does not respond promptly or disagrees with the method for adjustment in the Contract Sum, the method for adjustment in the Contract Sum shall be determined in the sole discretion of the Owner, on the basis of reasonable expenditures and savings of those performing the Work attributable to the change, including, in case of an increase in the Contract Sum, a reasonable amount for overhead and profit in accordance with, and not to exceed the limitations set forth in, Section 7.2. In such case, and also under Section 7.3.3.3, the Contractor shall keep and present, in such form as the Owner may prescribe, an itemized accounting together with appropriate supporting data. Unless otherwise provided in the Contract Documents, costs of performing the Work for the purposes of this Section 7.3.4 shall be limited to the following as described in Section 7.2:

- **.1** Costs of labor, including applicable payroll taxes, fringe benefits required by agreement or custom, workers' compensation insurance, and other employee costs approved by the Architect;
- **.2** Costs of materials, supplies and equipment, including the cost of transportation, whether incorporated or consumed;
- **.3** Rental costs of machinery and equipment, exclusive of hand tools and any hand-held equipment, whether rented from the Contractor or others;
- **.4** Costs of premiums for all bonds, permit fees, and sales, use or similar taxes directly related to the change; and
- **.5** Costs of field overhead personnel directly attributable to the change based on supporting data.

AIA Document A201™ – 2017. Copyright © 1911, 1915, 1918, 1925, 1937, 1951, 1958, 1961, 1963, 1966, 1970, 1976, 1987, 1997, 2007 and 2017 by The American Institute of Architects. **All rights reserved**. **WARNING: This AIA® Document is protected by U.S. Copyright Law and International Treaties. Unauthorized reproduction or distribution of this AIA® Document, or any portion of it, may result in severe civil and criminal penalties, and will be prosecuted to the maximum extent possible under the law.** This draft was produced by AIA software at 09:01:33 ET on 01/02/2019 under Order No.4449788754 which expires on 04/27/2019, and is not for resale.
User Notes: (1984719719)

§ 7.3.5 If the Contractor disagrees with the adjustment in the Contract Time, the Contractor may make a Claim in accordance with applicable provisions of Article 15.

§ 7.3.6 Upon receipt of a Construction Change Directive, the Contractor shall promptly proceed with the change in the Work involved and advise the Owner of the Contractor's agreement or disagreement with the method, if any, provided in the Construction Change Directive for determining the proposed adjustment in the Contract Sum or Contract Time.

§ 7.3.7 A Construction Change Directive signed by the Contractor indicates the Contractor's agreement therewith, including adjustment in Contract Sum and Contract Time or the method for determining them. The Contractor must proceed promptly regardless if the directive is signed by the Contractor.

§ 7.3.8 Not Used.

§ 7.3.9 Not Used.

§ 7.3.10 When the Owner and Contractor agree concerning the adjustments in the Contract Sum and/or Contract Time, or otherwise reach agreement upon the adjustments, such agreement shall be effective immediately and shall be recorded by preparation and execution of an appropriate Change Order. Change Orders may be issued for all or any part of a Construction Change Directive.

§ 7.3.11 If the Contractor does not expeditiously proceed with the Work to be performed under a Construction Change Directive (regardless of whether or not such Work is in dispute), the Owner may, in its sole discretion, cause such Work to be performed by others, and deduct the actual costs incurred by the Owner in connection with such reassigned Work from the Contract Sum.

§ 7.4 Minor Changes in the Work

The Architect may, subject to approval of the Owner, order minor changes in the Work that are consistent with the intent of the Contract Documents and do not involve an adjustment in the Contract Sum or an extension of the Contract Time. The Contractor shall carry out such written orders promptly.

The Architect's order for minor changes shall be in writing. If the Contractor believes that the proposed minor change in the Work will affect the Contract Sum or Contract Time, the Contractor shall notify the Architect and Owner and shall not proceed to implement the change in the Work. If the Contractor performs the Work set forth in the Architect's order for a minor change without prior notice to the Architect and Owner that such change will affect the Contract Sum or Contract Time, the Contractor waives any adjustment to the Contract Sum or extension of the Contract Time.

ARTICLE 8 TIME

§ 8.1 Definitions

§ 8.1.1 Unless otherwise provided, Contract Time is the period of time, including authorized adjustments, allotted in the Contract Documents for Substantial Completion of the Work.

§ 8.1.2 The date of commencement of the Work is the date established in the Notice to Proceed.

§ 8.1.3 The date of Substantial Completion is the date Substantial Completion is achieved in accordance with Section 9.8.

§ 8.1.4 The term "day" as used in the Contract Documents shall mean calendar day unless otherwise specifically defined.

§ 8.2 Progress and Completion

§ 8.2.1 Time limits stated in the Contract Documents are of the essence of the Contract. By executing the Contract, the Contractor confirms that the Contract Time is a reasonable period for performing the Work and that the Contractor is capable of completing the Work in accordance with the Contract Documents within the

AIA Document A201™ – 2017. Copyright © 1911, 1915, 1918, 1925, 1937, 1951, 1958, 1961, 1963, 1966, 1970, 1976, 1987, 1997, 2007 and 2017 by The American Institute of Architects. **All rights reserved.** **WARNING: This AIA® Document is protected by U.S. Copyright Law and International Treaties. Unauthorized reproduction or distribution of this AIA® Document, or any portion of it, may result in severe civil and criminal penalties, and will be prosecuted to the maximum extent possible under the law.** This draft was produced by AIA software at 09:01:33 ET on 01/02/2019 under Order No.4449788754 which expires on 04/27/2019, and is not for resale.
User Notes: (1984719719)

Contract Time.

§ 8.2.2 The Contractor shall not knowingly, except by agreement or instruction of the Owner in writing, commence the Work prior to the effective date of insurance required to be furnished by the Contractor and Owner.

§ 8.2.3 The Contractor shall proceed expeditiously with adequate forces and shall achieve Substantial Completion within the Contract Time.

§ 8.2.3.1 The Contractor shall monitor the progress of the Work for conformance with the requirements of the construction schedule and shall promptly advise the Owner of any delays or potential delays. The construction schedule shall be updated to reflect actual conditions (sometimes referred to as progress reports) as set forth in Section 3.10.1 of these General Conditions or as otherwise requested by the Owner. In the event any progress report indicates any delays or potential delays, the Contractor shall advise the Owner of its plan to recover the schedule, providing the Owner with a recovery schedule, and shall further take all steps necessary to correct the delay, including overtime and/or additional labor, if necessary. In no event shall any progress report or recovery schedule constitute an adjustment in the Contract Time or the Contract Sum unless any such adjustment is agreed to by the Owner and authorized pursuant to Change Order.

§ 8.2.3.2 In the event the Owner determines that the performance of the Work has not progressed or reached the level of completion required by the approved construction schedule for reasons within the responsibility of the Contractor, the Owner shall have the right to order the Contractor to take any and all corrective measures necessary to expedite the progress of construction, including, without limitation, (1) working additional shifts or overtime; (2) supplying additional manpower, equipment, and facilities; and (3) other similar measure (hereinafter referred to collectively as "Extraordinary Measures"). Such Extraordinary Measure shall continue until the progress of the Work complies with the stage of completion required by the approved construction schedule. The Owner's right to require Extraordinary Measures is solely for the purpose of ensuring the Contractor's compliance with the construction schedule.

§ 8.2.3.3 The Contractor shall not be entitled to any adjustment in the Contract Price in connection with Extraordinary Measures required by the Owner, if the Owner determines that the conditions creating the need for such Extraordinary Measures were within the responsibility of the Contractor.

§ 8.2.3.4 The Owner may exercise the rights furnished the Owner under or pursuant to this Section as frequently as the Owner deems necessary to ensure that the Contractor's performance of the Work will comply with any approved construction schedule or completion date established in accordance with the Contract.

§ 8.2.4 Not Used.

§ 8.2.5 Except in the event of an emergency, no substantial field operations shall be performed outside of regular working hours without the prior approval of the Owner. The Contractor shall not be entitled to additional compensation for work performed outside of regular working hours. For the purposes of this Contract "regular working hours" shall mean and include the hours of 7:00 a.m. to 3:00 p.m. unless otherwise provided in the Contract Documents.

§ 8.3 Delays and Extensions of Time

§ 8.3.1 If the Contractor is delayed at any time in the commencement or progress of the Work by (1) an act or neglect of the Owner or Architect, of an employee of either, or of a Separate Contractor; (2) by changes ordered in the Work; or (3) by labor disputes, fire, or unavoidable casualties beyond the Contractor's control, then the Contract Time may be extended by Change Order for such reasonable time periods as demonstrated through a Critical Path Analysis as described in and in conformance with Division 1 of the Specifications and accepted by the Owner.

§ 8.3.2 Claims relating to time shall be made in accordance with applicable provisions of Article 15.

AIA Document A201™ – 2017. Copyright © 1911, 1915, 1918, 1925, 1937, 1951, 1958, 1961, 1963, 1966, 1970, 1976, 1987, 1997, 2007 and 2017 by The American Institute of Architects. **All rights reserved**. **WARNING: This AIA® Document is protected by U.S. Copyright Law and International Treaties. Unauthorized reproduction or distribution of this AIA® Document, or any portion of it, may result in severe civil and criminal penalties, and will be prosecuted to the maximum extent possible under the law.** This draft was produced by AIA software at 09:01:33 ET on 01/02/2019 under Order No.4449788754 which expires on 04/27/2019, and is not for resale.
User Notes: (1984719719)

§ 8.3.2.1 Claims of delay and requests for extensions of time shall set forth in detail the circumstances of such claim, the dates upon which the claimed delay began and ended, and the number of days' extension of time requested. The Contractor shall provide supporting documentation as the Architect and Owner may require, including a revised Construction Schedule indicating the effect of the circumstances which form the basis for the claim.

§ 8.3.2.2 The Contractor shall not be entitled to an extension of time for each and every one of a number of causes which have a concurrent and interrelated effect on the progress of the Work.

§ 8.3.2.3 Claims for extensions of time arising out of authorized changes in the Work shall be made in writing prior to or concurrent with the submission of the Contractor's proposal for such changes. No extension of time arising out of changes in the Work will be granted after the date upon which the Contractor is authorized to proceed with such changes unless specific provision for an extension of time has been incorporated in the Owner's authorization to proceed.

§ 8.3.2.4 No Damage for Delay. Notwithstanding anything to the contrary set forth in the Contract Documents, the Owner shall not be liable to the Contractor for Claims or damages of any nature caused by or arising out of delays. The sole remedy against the Owner for delays shall be the allowance of additional time for completion of the Work, the amount of which shall be subject to the procedures set forth in the Contract Documents. Except to the extent, if any, expressly prohibited by law, the Contractor expressly agrees not to make and hereby waives any Claim for damages for any delay, including, but not limited to, those resulting from increased labor or material costs; directions given or not given by the Owner or Architect, including scheduling and coordination of the Work; the Architect's preparation of drawings and specifications or review of shop drawings and requests for instruction(s); or, on account of any delay, obstruction or hindrance for any cause whatsoever by the Owner, Owner, Architect, or any Separate Contractor, whether or not foreseeable or anticipated. The Contractor agrees that its sole right and remedy therefore shall be an extension of the Contract Time, if appropriate.

§ 8.3.2.5 It is expressly understood that, notwithstanding anything to the contrary set forth in the Contract Documents, no Subcontractor or Sub-subcontractor shall be entitled to make any Claim for additional compensation, costs or damages against the Contractor (nor may the Contractor assert against Owner such Claims as pass-through claims of Subcontractor or otherwise) for delay. Unless agreed by Owner in writing, Contractor shall include in every Subcontract a 'No-Damage-For-Delay' provision in a form approved by the Owner.

§ 8.3.3 This Section 8.3 does not preclude recovery of damages for delay by the Owner under other provisions of the Contract Documents.

ARTICLE 9 PAYMENTS AND COMPLETION

§ 9.1 Contract Sum

§ 9.1.1 The Contract Sum is stated in the Agreement and, including authorized adjustments, is the total amount payable by the Owner to the Contractor for performance of the Work under the Contract Documents.

§ 9.1.2 If unit prices are stated in the Contract Documents or subsequently agreed upon, and if quantities originally contemplated are materially changed so that application of such unit prices to the actual quantities causes substantial inequity to the Owner or Contractor, the applicable unit prices shall be equitably adjusted.

§ 9.2 Schedule of Values

§ 9.2.1 The Contractor shall submit a schedule of values to the Architect and Owner, as provided in Section 9.2.1.1 below, allocating the entire Contract Sum to the various portions of the Work. The schedule of values shall be prepared in the form, and supported by the data to substantiate its accuracy, as the Owner may require. This schedule, unless objected to by the Architect or Owner, shall be used as a basis for reviewing

AIA Document A201™ – 2017. Copyright © 1911, 1915, 1918, 1925, 1937, 1951, 1958, 1961, 1963, 1966, 1970, 1976, 1987, 1997, 2007 and 2017 by The American Institute of Architects. **All rights reserved**. **WARNING: This AIA® Document is protected by U.S. Copyright Law and International Treaties. Unauthorized reproduction or distribution of this AIA® Document, or any portion of it, may result in severe civil and criminal penalties, and will be prosecuted to the maximum extent possible under the law.** This draft was produced by AIA software at 09:01:33 ET on 01/02/2019 under Order No.4449788754 which expires on 04/27/2019, and is not for resale.
User Notes: (1984719719)

the Contractor's Applications for Payment for the Work. Any changes to the schedule of values shall be submitted to the Architect and Owner and supported by such data to substantiate its accuracy as the Architect or Owner may require, and, unless objected to by the Architect or Owner, shall be used as a basis for reviewing the Contractor's subsequent Applications for Payment.

§ 9.2.1.1 The Contractor shall submit its proposed schedule of values to the Owner and the Architect for review and approval before the earlier of (i) thirty (30) days after the execution of the Contract; and (ii) the submission by the Contractor of its first Application for Payment for the Work.

§ 9.2.1.2 The final schedule of values for the Work shall be submitted (typewritten) on an AIA Document G702 form and shall be broken down into a minimum of sixteen (16) divisions based on the Construction Specifications Institute (CSI) Guidelines and subdivided further by Materials and Labor.

§ 9.3 Applications for Payment

§ 9.3.1 By the twenty-fifth day of each month, the Contractor shall submit to the Owner and the Architect a draft Application for Payment for Work performed through the end of such month in the form of an AIA Document G702, Application and Certification for Payment, supported by AIA Document G703, Continuation Sheet. The latest edition issued by the AIA of each such document must be used.

The Owner and the Architect will within ten (10) days after receipt of the Contractor's draft Application for Payment notify the Contractor in writing of all necessary revisions.

The Contractor shall make all revisions to the Application for Payment as required by the Owner.

The Contractor shall then submit to the Owner and the Architect an Application for Payment for Work in the form of a notarized AIA Document G702, Application for Payment, supported by AIA Document G703, Continuation Sheet, free of any handwritten, marks, notes, annotations, etc. and an Affidavit of Payment and Release of Claims form (either partial release or final release as appropriate) in a form as provided by the Owner.

By submission of the Affidavit and the Application for Payment the Contractor certifies that, to the best of the Contractor's knowledge, information and belief, the Work covered by this Application for Payment has been completed in accordance with the Contract Documents, that all amounts have been paid by the Contractor for Work for which previous Certificates for Payment were issued and payments received from the Owner, and that the current payment requested and shown therein is now due.

§ 9.3.1.1 Each payment requisition submitted by the Contractor shall include a statement showing the status of all pending construction change orders, other pending change directives and approved changes to the original Contract or subcontract. Such statement shall identify the pending construction change orders and other pending change directives, and shall include the date such change orders and directives were initiated, the costs associated with their performance and a description of any work completed. As used in this subsection, "pending construction change order" or "other pending change directive", means an authorized directive for extra work that has been issued to the Contractor or a Subcontractor.

§ 9.3.1.2 Applications for Payment shall not include requests for payment for portions of the Work for which the Contractor does not intend to pay a Subcontractor or material or equipment supplier, unless such Work has been performed by others whom the Contractor intends to pay.

§ 9.3.1.3 Applications for Payment shall deduct, from the amount claimed due, the retainage and any other amounts to be withheld pursuant to Section 5.1.6 of the Agreement. The Contractor shall be prohibited from withholding more than the retainage withheld by the Owner pursuant to the Agreement from any payment which is otherwise due to any Subcontractor.

§ 9.3.1.4 Pursuant to the requirements of §4b-93 of the Connecticut General Statutes, whenever the Owner has designated a separate section for a class of work, the Contractor shall, when applicable, state as part of its application for partial payment that it considers the work required to be done under any such separate section

AIA Document A201™ – 2017. Copyright © 1911, 1915, 1918, 1925, 1937, 1951, 1958, 1961, 1963, 1966, 1970, 1976, 1987, 1997, 2007 and 2017 by The American Institute of Architects. **All rights reserved. WARNING: This AIA® Document is protected by U.S. Copyright Law and International Treaties. Unauthorized reproduction or distribution of this AIA® Document, or any portion of it, may result in severe civil and criminal penalties, and will be prosecuted to the maximum extent possible under the law.** This draft was produced by AIA software at 09:01:33 ET on 01/02/2019 under Order No.4449788754 which expires on 04/27/2019, and is not for resale.
User Notes: (1984719719)

to be fully completed in accordance with the terms of the Contract. The Owner shall thereupon conduct an inspection of the work in such class, and if it finds that such work has been fully completed in accordance with the terms of the Contract, it shall issue a statement certifying that such work is accepted as fully completed, and shall pay the Contractor in full for such work.

§ 9.3.2 Unless otherwise specifically approved by the Owner, the Owner will pay only for materials and equipment delivered and incorporated in the Work as required by the Contract Documents. If approved in advance by the Owner, payment may be similarly made for materials and equipment suitably stored on site or off site at a location agreed upon in writing. Payment for materials and equipment stored on or off the site shall be conditioned upon compliance by the Contractor with procedures satisfactory to the Owner to establish the Owner's title to such materials and equipment or otherwise protect the Owner's interest, and shall include the costs of applicable insurance, storage and transportation to the site for such materials and equipment stored off the site.

§ 9.3.2.1 Payment for stored material or equipment either on site or off site will require Owner's prior approval. Approval will be dependent upon Contractor's demonstration of hardship due to extended time duration between required purchase and actual field installation or the critical nature of the commodity in relation to the critical path of the construction schedule. Additionally, the Contractor must provide secured storage, insurance coverage for the material or equipment during storage, transfer of ownership of the material or equipment to the Owner and the Contractor shall indemnify the Owner for all costs associated with any delay and the costs associated with or resulting from, the loss or damage of such material or equipment during such storage. Payment for such stored material or equipment will be limited to 80% of invoice verified cost to the Contractor. No payment will be considered for raw materials. Those items requiring fabrication must be complete so that identification and appropriate documentation can be obtained to ensure such items are part of the Work.

§ 9.3.3 The Contractor warrants that title to all Work covered by an Application for Payment will pass to the Owner no later than the time of payment. The Contractor further warrants that upon submittal of an Application for Payment, all Work for which Certificates for Payment have been previously issued and payments received from the Owner shall, to the best of the Contractor's knowledge, information and belief, be free and clear of liens, claims, security interests, or encumbrances, in favor of the Contractor, Subcontractors, suppliers, or other persons or entities that provided labor, materials, and equipment relating to the Work.

§ 9.3.4 If payment for stored materials or equipment is approved, Contractor shall furnish with its Application for Payment which includes such stored materials or equipment a vendor invoice establishing the value of the material or equipment stored along with a statement of the amount to be paid to the vendor therefore.

§ 9.3.4.1 Such stored items are subject to prior approval for storage and to inspection by Architect and Owner before payment therefore will be approved.

§ 9.3.4.2 The Contractor shall give the Owner Certificates of Insurance in accordance with the Contract Documents covering the full value of the items stored. Such insurance shall be maintained until the items are incorporated in the Work.

§ 9.4 Certificates for Payment

§ 9.4.1 The Architect will, within seven days after receipt of the Contractor's Application for Payment, either (1) issue to the Owner a Certificate for Payment in the full amount of the Application for Payment, with a copy to the Contractor; or (2) issue to the Owner a Certificate for Payment for such amount as the Architect determines is properly due, and notify the Contractor and Owner of the Architect's reasons for withholding certification in part as provided in Section 9.5.1; or (3) withhold certification of the entire Application for Payment, and notify the Contractor and Owner of the Architect's reason for withholding certification in

AIA Document A201™ – 2017. Copyright © 1911, 1915, 1918, 1925, 1937, 1951, 1958, 1961, 1963, 1966, 1970, 1976, 1987, 1997, 2007 and 2017 by The American Institute of Architects. **All rights reserved**. **WARNING: This AIA® Document is protected by U.S. Copyright Law and International Treaties. Unauthorized reproduction or distribution of this AIA® Document, or any portion of it, may result in severe civil and criminal penalties, and will be prosecuted to the maximum extent possible under the law.** This draft was produced by AIA software at 09:01:33 ET on 01/02/2019 under Order No.4449788754 which expires on 04/27/2019, and is not for resale.
User Notes: (1984719719)

whole as provided in Section 9.5.1.

§ 9.4.2 The issuance of a Certificate for Payment will constitute a representation by the Architect to the Owner, based on the Architect's evaluation of the Work and the data in the Application for Payment, that, to the best of the Architect's knowledge, information, and belief, the Work has progressed to the point indicated, the quality of the Work is in accordance with the Contract Documents and that the Contractor is entitled to payment in the amount certified. The foregoing representations are subject to an evaluation of the Work for conformance with the Contract Documents upon Substantial Completion, to results of subsequent tests and inspections, to correction of minor deviations from the Contract Documents prior to completion and to specific qualifications expressed by the Architect. However, the issuance of a Certificate for Payment will not be a representation that the Architect has (1) made exhaustive or continuous on-site inspections to check the quality or quantity of the Work; (2) reviewed construction means, methods, techniques, sequences, or procedures; (3) reviewed copies of requisitions received from Subcontractors and suppliers and other data requested by the Owner to substantiate the Contractor's right to payment; or (4) made examination to ascertain how or for what purpose the Contractor has used money previously paid on account of the Contract Sum.

§ 9.5 Decisions to Withhold Certification

§ 9.5.1 The Architect, following consultation with the Owner, may withhold a Certificate for Payment in whole or in part, to the extent reasonably necessary to protect the Owner, if in the Architect's opinion the representations to the Owner required by Section 9.4.2 cannot be made. If the Architect is unable to certify payment in the amount of the Application, the Architect will notify the Contractor and Owner as provided in Section 9.4.1. The Architect, following consultation with the Owner, may also withhold a Certificate for Payment or, because of subsequently discovered evidence, may nullify the whole or a part of a Certificate for Payment previously issued, to such extent as may be necessary in the Architect's opinion to protect the Owner from loss for which the Contractor is responsible, including loss resulting from acts and omissions described in Section 3.3.2, because of:

- **.1** defective Work not remedied;
- **.2** third party claims filed or reasonable evidence indicating probable filing of such claims unless full bond coverage, insurance or security acceptable to the Owner is provided by or demonstrated by the Contractor;
- **.3** failure of the Contractor to make payments properly to Subcontractors or suppliers for labor, materials or equipment in accordance with the provisions of this Contract;
- **.4** reasonable evidence that the Work cannot be completed for the unpaid balance of the Contract Sum;
- **.5** injury to persons or damage to the Work or property of the Owner, or a Separate Contractor, or others caused by the act of neglect of the Contractor or any Subcontractors;
- **.6** reasonable evidence that the Work will not be completed within the Contract Time, and that the unpaid balance of the Contract Sum would not be adequate to cover actual or liquidated damages for the anticipated delay;
- **.7** repeated failure to carry out the Work in accordance with the Contract Documents;
- **.8** failure to submit Construction Schedules as outlined in Division 1 of the Specifications in the time prescribed;
- **.9** failure to submit all documents necessary for compliance with CHRO requirements;
- **.10** failure to submit all copies of all certified payrolls;
- **.11** failure to provide copies of subcontractors contracts per statute;
- **.12** failure to submit any other documentation requested by the Owner necessary for compliance with the requirements of any regulatory agency;
- **.13** amounts previously paid to the Contractor in excess of amounts properly due the Contractor; or
- **.14** failure of the Contractor to comply with any of the Contractor's indemnification obligations under the Contract Documents.

§ 9.5.2 When either party disputes the Architect's decision regarding a Certificate for Payment under Section 9.5.1, in whole or in part, that party may submit a Claim in accordance with Article 15.

§ 9.5.3 When the reasons for withholding certification are removed, certification will be made for amounts

AIA Document A201™ – 2017. Copyright © 1911, 1915, 1918, 1925, 1937, 1951, 1958, 1961, 1963, 1966, 1970, 1976, 1987, 1997, 2007 and 2017 by The American Institute of Architects. **All rights reserved.** **WARNING: This AIA® Document is protected by U.S. Copyright Law and International Treaties. Unauthorized reproduction or distribution of this AIA® Document, or any portion of it, may result in severe civil and criminal penalties, and will be prosecuted to the maximum extent possible under the law.** This draft was produced by AIA software at 09:01:33 ET on 01/02/2019 under Order No.4449788754 which expires on 04/27/2019, and is not for resale.
User Notes: (1984719719)

previously withheld. The Owner shall not be deemed in default by reason of withholding payment while any of the above grounds remain uncured, nor shall any interest accrue or be payable with respect to any payments so withheld.

§ 9.5.4 If the Architect withholds certification for payment under Section 9.5.1.3, the Owner may, at its sole option, issue joint checks to the Contractor and to any Subcontractor or supplier to whom the Contractor failed to make payment for Work properly performed or material or equipment suitably delivered. If the Owner makes payments by joint check, the Owner shall notify the Architect and the Contractor shall reflect such payment on its next Application for Payment.

§ 9.5.5 The Owner shall have the right to apply any such amounts so withheld in such manner, as the Owner may deem proper to satisfy such claims or to secure such protection. Such application of such amounts shall constitute payments to the Contractor.

§ 9.6 Progress Payments

§ 9.6.1 After the Architect has certified an Application for Payment, the Owner shall make payment of the certified amount in the manner and within the time provided in the Contract Documents or shall so notify the Contractor of the Owner's intent to withhold payment to the extent reasonably necessary to protect the Owner from loss for which the Contractor is responsible, including, loss resulting from acts or omissions of Subcontractors due to causes set forth in Section 9.5.1.

§ 9.6.2 The Contractor shall pay any amounts due a Subcontractor or supplier, whether for labor performed or materials furnished, not later than seven (7) days after the date the Contractor receives payment from the Owner which encompasses labor performed or materials furnished by such Subcontractor or supplier. Retainage withheld by the Contractor from such payments shall not exceed amounts actually retained from payments to the Contractor on account of the Subcontractor's or supplier's portion of the Work. The Contractor shall include in all of its Subcontracts with its Subcontractors and suppliers a requirement that the Subcontractors and suppliers pay any amounts due any sub-subcontractors or suppliers no later than seven (7) days after the Subcontractor or supplier receives a payment from the Contractor which encompasses labor performed or materials furnished by such sub-subcontractor or supplier.

§ 9.6.3 The Architect will, on request, furnish to a Subcontractor, if practicable, information regarding percentages of completion or amounts applied for by the Contractor and action taken thereon by the Architect and Owner on account of portions of the Work done by such Subcontractor.

§ 9.6.4 The Owner has the right to request written evidence from the Contractor that the Contractor has properly paid Subcontractors and suppliers the amounts paid by the Owner to the Contractor for subcontracted Work. If the Contractor fails to furnish such evidence within seven days, the Owner shall have the right to contact Subcontractors and suppliers to ascertain whether they have been properly paid. Neither the Owner nor Architect shall have an obligation to pay, or to see to the payment of money to, a Subcontractor or supplier, except as may otherwise be required by law.

§ 9.6.5 The Contractor payments to suppliers shall be treated in a manner similar to that provided in Sections 9.6.2, 9.6.3 and 9.6.4.

§ 9.6.6 A Certificate for Payment, a progress payment, or partial or entire use or occupancy of the Project by the Owner shall not constitute acceptance of Work not in accordance with the Contract Documents.

§ 9.6.7 Pursuant to Connecticut General Statutes Sections 10a-109a through 10a-109y:

.1 No payments shall be made by the Owner on account of this Contract for this project until the bills or estimates presented for such payments shall have been duly certified to be correct by the Owner;

.2 The obligations of the Owner or the State of Connecticut to make payments to the Contractor for services, labor, or materials provided on this project are limited to those amounts set forth in the Contract Documents and any agreed upon changes or amendments thereto. Neither the

AIA Document A201™ – 2017. Copyright © 1911, 1915, 1918, 1925, 1937, 1951, 1958, 1961, 1963, 1966, 1970, 1976, 1987, 1997, 2007 and 2017 by The American Institute of Architects. **All rights reserved**. **WARNING: This AIA® Document is protected by U.S. Copyright Law and International Treaties. Unauthorized reproduction or distribution of this AIA® Document, or any portion of it, may result in severe civil and criminal penalties, and will be prosecuted to the maximum extent possible under the law.** This draft was produced by AIA software at 09:01:33 ET on 01/02/2019 under Order No.4449788754 which expires on 04/27/2019, and is not for resale.
User Notes: (1984719719)

Owner nor the State of Connecticut shall or may be liable to make payments in excess of such amount.

§ 9.6.8 Provided the Owner has fulfilled its payment obligations under the Contract Documents, the Contractor shall defend and indemnify the Owner from all loss, liability, damage or expense, including reasonable attorney's fees and litigation expenses, arising out of any lien claim or other claim for payment by any Subcontractor, Sub-subcontractor or supplier of any tier. Upon receipt of notice of a lien claim or other claim for payment, the Owner shall notify the Contractor. If approved by the applicable court, when required, the Contractor may substitute a surety bond for the property against which the lien or other claim for payment has been asserted.

§ 9.7 Failure of Payment

If the Architect does not issue a Certificate for Payment in accordance with the requirements of the Contract Documents, through no fault of the Contractor, within seven (7) days after receipt of the Contractor's Application for Payment, or if the Owner does not pay the Contractor within seven (7) days after the date established in the Contract Documents the amount certified by the Architect or awarded by binding dispute resolution, then the Contractor may, upon seven (7) additional days' notice to the Owner and Architect be entitled to the applicable statutory interest. Said provision does not apply where the Owner has submitted to the Contractor its intention to withhold payment in accordance with Section 9.6.1 or where the Architect has submitted to the Contractor its intention to withhold certification in accordance with Section 9.5.1.

§ 9.8 Substantial Completion

§ 9.8.1 Substantial Completion is the stage in the progress of the Work when the Work or designated portion thereof is sufficiently complete in accordance with the Contract Documents so that the Owner can occupy or utilize, without impact or interruptions the Work for its intended use.

The Work shall be considered to be "Substantially Complete(d)" or to have reached "Substantial Completion" on the date as determined by the Architect when (1) the entirety of the Work is sufficiently complete in accordance with the Contract Documents so that the Owner can utilize the Work for the use for which it is intended (subject only items on the Punch List, the completion of which can be accomplished within thirty (30) days without interfering with the actual use of the Work by the Owner or those claiming by, through or under the Owner); (2) the Contractor has obtained a temporary or permanent certificate of occupancy for the Work permitting the lawful occupancy of the entire Project and any other permits, approvals, licenses, and other documents from any governmental authority having jurisdiction thereof necessary for the beneficial occupancy thereof; and (3) the Architect has issued a Certificate of Substantial Completion for the entirety of the Work pursuant to Section 9.8.4 of these General Conditions and the Owner has issued written approval of the Certificate of Substantial Completion.

§ 9.8.2 When the Contractor considers that the Work, or a portion thereof which the Owner agrees to accept separately, is Substantially Complete (with the exception of the issuance of the Architect's Certificate of Substantial Completion and the Owner's approval thereof), the Contractor shall prepare and submit to the Architect a comprehensive list of items to be completed or corrected prior to final payment (the "Punchlist"). Failure to include an item on the Punchlist does not alter the responsibility of the Contractor to complete all Work in accordance with the Contract Documents.

§ 9.8.3 Upon receipt of the Contractor's Punchlist, the Architect will make an inspection to determine whether the Work or designated portion thereof is Substantially Complete (with the exception of the issuance of the Architect's Certificate of Substantial Completion and the Owner's approval thereof). If the Architect's inspection discloses any item, whether or not included on the Contractor's Punchlist, which is not sufficiently complete in accordance with the Contract Documents so that the Owner can occupy or utilize the Work or designated portion thereof for its intended use, the Contractor shall, before issuance of the Certificate of Substantial Completion, complete or correct such item upon notification by the Architect. In such case, the Contractor shall then submit a request for another inspection by the Architect to determine Substantial Completion.

§ 9.8.4 When the Work or designated portion thereof is Substantially Complete, the Architect will prepare a

AIA Document A201™ – 2017. Copyright © 1911, 1915, 1918, 1925, 1937, 1951, 1958, 1961, 1963, 1966, 1970, 1976, 1987, 1997, 2007 and 2017 by The American Institute of Architects. **All rights reserved.** **WARNING: This AIA® Document is protected by U.S. Copyright Law and International Treaties. Unauthorized reproduction or distribution of this AIA® Document, or any portion of it, may result in severe civil and criminal penalties, and will be prosecuted to the maximum extent possible under the law.** This draft was produced by AIA software at 09:01:33 ET on 01/02/2019 under Order No.4449788754 which expires on 04/27/2019, and is not for resale.
User Notes: (1984719719)

Certificate of Substantial Completion that shall establish the date of Substantial Completion; establish responsibilities of the Owner and Contractor for security, maintenance, heat, utilities, damage to the Work and insurance; and fix the time within which the Contractor shall finish all items on the Punchlist accompanying the Certificate. Warranties required by the Contract Documents shall commence on the date of Substantial Completion of the Work or designated portion thereof unless otherwise provided in the Certificate of Substantial Completion.

§ 9.8.5 The Certificate of Substantial Completion shall be submitted to the Owner and Contractor for their written acceptance of responsibilities assigned to them in the Certificate. The Certificate of Substantial Completion shall become valid upon the written approval thereof by the Owner.

§ 9.8.6 Certifications. The Contractor at completion of construction shall provide to the Owner a "Certificate of Substantial Compliance" bearing original signatures of an officer of the company stating: "This is to CERTIFY that, in my professional opinion the complete structure/renovations described above is in substantial compliance with the approved construction documents on file with the Owner. Minor deviations and special stipulations are noted below (if any)".

§ 9.9 Partial Occupancy or Use

§ 9.9.1 The Owner may occupy or use any completed or partially completed portion of the Work at any stage when such portion is designated by separate agreement with the Contractor, provided such occupancy or use is consented to by the insurer and authorized by public authorities having jurisdiction over the Project. Such partial occupancy or use may commence whether or not the portion is substantially complete, provided the Owner and Contractor have accepted in writing the responsibilities assigned to each of them for payments, retainage, if any, security, maintenance, heat, utilities, damage to the Work and insurance, and have agreed in writing concerning the period for correction of the Work and commencement of warranties required by the Contract Documents. When the Contractor considers a portion substantially complete, the Contractor shall prepare and submit a list to the Architect as provided under Section 9.8.2. Consent of the Contractor to partial occupancy or use shall not be unreasonably withheld. The stage of the progress of the Work shall be determined by written agreement between the Owner and Contractor or, if no agreement is reached, by the decision of the Architect.

§ 9.9.2 Immediately prior to such partial occupancy or use, the Owner, Contractor and Architect shall jointly inspect the area to be occupied or the portion of the Work to be used in order to determine and record the condition of the Work.

§ 9.9.3 Unless otherwise agreed upon, partial occupancy or use of a portion or portions of the Work shall not constitute acceptance of Work not complying with the requirements of the Contract Documents.

§ 9.10 Final Completion and Final Payment

§ 9.10.1 Upon receipt of the Contractor's notice that the Work is ready for final inspection and acceptance and upon receipt of a final Application for Payment, the Architect will promptly make such inspection. When the Architect finds the Work acceptable under the Contract Documents and the Contract fully performed, the Architect will promptly issue a final Certificate for Payment stating that to the best of the Architect's knowledge, information and belief, and on the basis of the Architect's on-site visits and inspections, the Work has been completed in accordance with the Contract Documents and that the entire balance found to be due the Contractor and noted in the final Certificate is due and payable. The Architect's final Certificate for Payment will constitute a further representation that conditions listed in Section 9.10.2 as precedent to the Contractor's being entitled to final payment have been fulfilled.

§ 9.10.2 Neither final payment nor any remaining retained percentage shall become due until the Contractor submits to the Architect (1) an affidavit that payrolls, bills for materials and equipment, and other indebtedness connected with the Work for which the Owner or the Owner's property might be responsible or encumbered (less amounts withheld by Owner) have been paid or otherwise satisfied; (2) a certificate evidencing that insurance required by the Contract Documents to remain in force after final payment is currently in effect; (3) a written statement that the Contractor knows of no reason that the insurance will not be renewable to cover the period required by the Contract Documents; (4) consent of surety, if any, to final

AIA Document A201™ – 2017. Copyright © 1911, 1915, 1918, 1925, 1937, 1951, 1958, 1961, 1963, 1966, 1970, 1976, 1987, 1997, 2007 and 2017 by The American Institute of Architects. **All rights reserved**. **WARNING: This AIA® Document is protected by U.S. Copyright Law and International Treaties. Unauthorized reproduction or distribution of this AIA® Document, or any portion of it, may result in severe civil and criminal penalties, and will be prosecuted to the maximum extent possible under the law.** This draft was produced by AIA software at 09:01:33 ET on 01/02/2019 under Order No.4449788754 which expires on 04/27/2019, and is not for resale.
User Notes: (1984719719)

payment; (5) documentation of any special warranties, such as manufacturers' warranties or specific Subcontractor warranties;, (6) if required by the Owner, other data establishing payment or satisfaction of obligations, such as receipts and releases and waivers of liens, claims, security interests or encumbrances arising out of the Contract, to the extent and in such form as may be designated by the Owner; (7) all documents necessary for compliance with CHRO requirements and as required to obtain the written statement of release from CHRO referenced in Section 5.1.6.2.6 of the Agreement; (8) copies of all certified payrolls, (9) certifies that all material installed does not contain asbestos; (10) the Certificate of Substantial Compliance referenced in Section 9.8.6; and (11) any other documentation requested by the Owner necessary for compliance with the requirements of any regulatory agency. If a Subcontractor refuses to furnish a release or waiver required by the Owner, the Contractor may furnish a bond satisfactory to the Owner to indemnify the Owner against such lien, claim, security interest, or encumbrance. If a lien, claim, security interest, or encumbrance remains unsatisfied after payments are made, the Contractor shall promptly pay to the Owner all money that the Owner may be compelled to pay in discharging the lien, claim, security interest, or encumbrance, including all costs and reasonable attorneys' fees.

§ 9.10.3 If, after Substantial Completion of the Work, final completion thereof is materially delayed through no fault of the Contractor or by issuance of Change Orders affecting final completion, and the Architect so confirms, the Owner shall, upon application by the Contractor, the written approval of the Owner and certification by the Architect, and without terminating the Contract, make payment of the balance due for that portion of the Work fully completed, corrected, and accepted. If the remaining balance for Work not fully completed or corrected is less than retainage stipulated in the Contract Documents, and if bonds have been furnished, the written consent of the surety to payment of the balance due for that portion of the Work fully completed and accepted shall be submitted by the Contractor to the Architect prior to certification of such payment. Such payment shall be made under terms and conditions governing final payment, except that it shall not constitute a waiver of Claims.

§ 9.10.4 Not Used.

§ 9.10.5 Acceptance of final payment by the Contractor, a Subcontractor, or a supplier, shall constitute a waiver of claims by that payee except those previously made in writing and identified by that payee as unsettled at the time of final Application for Payment.

ARTICLE 10 PROTECTION OF PERSONS AND PROPERTY

§ 10.1 Safety Precautions and Programs

§ 10.1.1 The Contractor shall be responsible for initiating, maintaining and supervising all safety precautions and programs in connection with the performance of the Contract. Prior to and as a condition of mobilization on site, the Contractor shall submit a Safety Plan to Owner. To the extent the Owner provides safety manuals or other information, any such manuals and information shall be deemed minimum requirements for the Contractor's fulfillment of its safety obligations. Safety fines may be assessed based on Owner's safety plan and or Occupational Safety and Health Administration ("OSHA").

§10.1.1.1 Prior to the commencement of the Work, the Contractor shall submit proof to the Owner of compliance with the requirements of Connecticut General Statutes §31-53b.

§10.1.1.2 The Contractor shall remove all snow and ice as may be required for the proper protection and/or prosecution of the Work. The Contractor shall coordinate and cooperate with the Owner for such activities.

§ 10.1.2 Contractor's Safety Program: The Contractor hereby acknowledges that the job site safety will be of utmost importance. Contractor shall be responsible for initiating, maintaining and supervising safety and anti-substance abuse precautions and programs in connection with the Work. Contractor shall provide all protection to prevent injury to all persons involved in any way in the Work and all other persons, including, without limitation, the employees, agents, guests, visitors, invitees and licensees of the Owner who may visit or be affected thereby. These precautions shall include, but in no event be limited to: (1) those set forth in the most current provisions of the Owner's Contractor Environmental Health and Safety Manual, which is incorporated by reference as a Contract Document; (2) the posting of danger signs and personal notification to all affected persons of the existence of a hazard of whatever nature; (3) the furnishing and maintaining of

AIA Document A201™ – 2017. Copyright © 1911, 1915, 1918, 1925, 1937, 1951, 1958, 1961, 1963, 1966, 1970, 1976, 1987, 1997, 2007 and 2017 by The American Institute of Architects. **All rights reserved**. **WARNING: This AIA® Document is protected by U.S. Copyright Law and International Treaties. Unauthorized reproduction or distribution of this AIA® Document, or any portion of it, may result in severe civil and criminal penalties, and will be prosecuted to the maximum extent possible under the law.** This draft was produced by AIA software at 09:01:33 ET on 01/02/2019 under Order No.4449788754 which expires on 04/27/2019, and is not for resale.
User Notes: (1984719719)

necessary traffic control barricades and flagger services; (4) the use, storage, removal and disposal of required explosives or other hazardous materials only under the supervision of qualified personnel and after first obtaining permission of all applicable governmental authorities; (5) and the maintenance of adequate quantities of both hose and operable fire extinguishers at the job site. The Contractor shall set forth in writing its own safety and anti-substance abuse precautions and programs in connection with the Work and if requested by the Owner submit the same to the Owner or its designee for review. The Owner may but shall not be obligated to make suggestions and recommendations to the Contractor with respect thereto.

.1 **Compliance of Work, Equipment and Procedures with all Laws**: All Work, whether performed by the Contractor, Subcontractors or Sub-subcontractors, or anyone directly or indirectly employed by any of them, and all equipment, appliances, machinery, materials, tools and like items incorporated or used in the Work, shall be in compliance with and conform to: (a) all applicable laws, ordinances, rules, regulations and orders of any public, quasi-public or other governmental bodies relating to the safety of persons and their protection against injury, specifically including, but in no event limited to the Federal Occupational Safety and Health Act of 1970, as amended and all rules and regulations now or hereafter in effect pursuant to said Act and the OSH Act of the State of Connecticut, as amended and all rules and regulations now or hereafter in effect pursuant to said Act; and (b) all rules, regulations and requirements of the Owner and its insurance carriers relating thereto. In the event of conflicting provisions, the more stringent shall govern.

.2 **Contractor's Designation of Safety Program Administrator**: The Contractor shall designate a qualified member of its organization at the job site in accordance with the requirements of the Owner's Contractor Environmental Health and Safety Manual, whose duties shall include enforcement of the Contractor's Safety Program to assure compliance with Article 10 and to prevent accidents. This position may be required to be a full-time position dedicated to this Project. This person's name, qualifications and the estimated number of man-hours of effort per week performing this function shall be submitted to the Owner in writing. His or her identity, qualifications and level of effort must be satisfactory to the Owner who shall have the sole discretion to approve or reject the same. Any reduction to this schedule must be submitted to the Owner for approval. The Contractor shall further cause each of its Subcontractors of any tier to designate a qualified safety representative to assist the Contractor's safety representative in the performance of his or her duties as described above and the names of such representative shall be given to the Owner.

.3 **Suspension of Contractor's Work**: If in the opinion of the Owner or its designee the Contractor shall fail to provide a safe area for the performance of the Work or any portion thereof, the Owner or its designee shall have the right (but not the obligation) to suspend Work in the unsafe area. Contractor shall be liable for all costs incurred of any nature (including without limitation overtime pay, liquidated damages or other costs resulting from delays) resulting from the suspension.

.4 **Right of Owner to have Contractor Send Worker Home**: The Contractor shall provide to each worker on the job site the proper safety equipment for the duties being performed by that worker and will not permit any worker on the job site who fails or refuses to use the same. The Owner shall have the right but not the obligation to order the Contractor to cause any worker to be sent home for the day or to otherwise temporarily or permanently remove him or her from the job site for his or her failure to comply with safe practices or anti-substance abuse policies. Contractor shall promptly comply with such orders from the Owner and shall be liable for any and all costs of whatsoever nature, including attorney's fees paid or incurred by the Owner.

§ 10.1.3 Protection of Work and Property; Responsibility for Loss The Contractor shall, throughout its performance of the Work, maintain adequate and continuous protection of all property of the Owner and third parties and of the Work and temporary facilities against loss or damage from whatever cause arising out of the performance of the Work and shall comply with the requirements of the Owner and its insurance carriers and with all applicable laws, codes, rules and regulations with respect to the prevention of loss or damage to property as a result of fire or other hazards.

AIA Document A201™ – 2017. Copyright © 1911, 1915, 1918, 1925, 1937, 1951, 1958, 1961, 1963, 1966, 1970, 1976, 1987, 1997, 2007 and 2017 by The American Institute of Architects. **All rights reserved**. **WARNING: This AIA® Document is protected by U.S. Copyright Law and International Treaties. Unauthorized reproduction or distribution of this AIA® Document, or any portion of it, may result in severe civil and criminal penalties, and will be prosecuted to the maximum extent possible under the law.** This draft was produced by AIA software at 09:01:33 ET on 01/02/2019 under Order No.4449788754 which expires on 04/27/2019, and is not for resale.
User Notes: (1984719719)

§ 10.1.4 Emergencies In any emergency affecting the safety of persons or property, or in the event of a claimed violation of any federal or state safety or health law or regulation arising out of or in any way connected with the Work or its performance, the Contractor shall act immediately to prevent threatened damage, injury, or loss or to remedy said violation whichever is applicable, failing which the Owner or its designee may immediately take whatever action it deems necessary including, but not limited to, suspending the Work.

The Owner may offset any and all cost or expenses of whatever nature including attorneys' fees paid or incurred by the Owner in taking such action against any sums then or thereafter due to the Contractor. The Contractor shall defend, indemnify, and hold the Owner, and its officers, agents, employees, harmless against any and all costs, expenses or liability in accordance with Section 3.18. If the Contractor shall be entitled to any additional compensation or extension of time claimed on account of emergency work not due to the fault or neglect of the Contractor or its Subcontractors or Sub-subcontractors, it shall be handled as a request for a Change Order as provided in Section 7.2 of this Contract.

§ 10.2 Safety of Persons and Property

§ 10.2.1 The Contractor shall take reasonable precautions for the safety of, and shall provide reasonable protection to prevent damage, injury or loss to

- **.1** Employees on the Work and other persons who may be affected thereby;
- **.2** The Work and materials and equipment to be incorporated therein, whether in storage on or off the site, under care, custody, or control of the Contractor, a Subcontractor, or a Sub-subcontractor; and
- **.3** Other property at the site or adjacent thereto, such as trees, shrubs, lawns, walks, pavements, roadways, structures and utilities not designated for removal, relocation or replacement in the course of construction.

The Contractor shall provide and pay for whatever security measures the Contractor deems necessary to protect the Work until acceptance by the Owner through the issuance of a Certificate of Substantial Completion.

§ 10.2.2 The Contractor shall comply with and give notices required by applicable laws, statutes, ordinances, codes, rules and regulations, and lawful orders of public authorities bearing on the safety of persons or property or their protection from damage, injury or loss.

§ 10.2.3 At a minimum, the Contractor shall implement, erect and maintain, as required by existing conditions and performance of the Contract, reasonable safeguards for safety and protection, including posting danger signs and other warnings against hazards, promulgating safety regulations and notifying owners and users of adjacent sites and utilities of the safeguards. Additionally, the Contractor shall maintain all passageways, guard fences, lights and other facilities for protection. The Contractor shall also be responsible for all measures necessary to protect any property adjacent to the Project and improvements thereon. Any damage to such property or improvements shall be promptly repaired by the Contractor at its sole cost and expense.

§ 10.2.4 When use or storage of explosives or other hazardous materials or equipment or unusual methods are necessary for the execution of the Work, the Contractor, at a minimum, shall exercise utmost care and carry on such activities under the supervision of properly qualified personnel. When use or storage of explosives or other hazardous materials or equipment or unusual methods are necessary, the Contractor shall give the Owner advance written notice of at least five (5) days prior to bringing to the site or utilizing such explosives, materials, equipment or methods.

§ 10.2.5 The Contractor shall promptly remedy damage and loss (other than damage or loss insured under property insurance required by the Contract Documents) to property referred to in Sections 10.2.1.2 and 10.2.1.3 and indemnify and save the Owner harmless for all damage or injury to referenced persons and property caused in whole or in part by the Contractor, a Subcontractor, a Sub-subcontractor, or anyone directly or indirectly employed by any of them, or by anyone for whose acts they may be liable and for which the Contractor is responsible under Sections 10.2.1.2 and 10.2.1.3. The Contractor may make a Claim for the

AIA Document A201™ – 2017. Copyright © 1911, 1915, 1918, 1925, 1937, 1951, 1958, 1961, 1963, 1966, 1970, 1976, 1987, 1997, 2007 and 2017 by The American Institute of Architects. **All rights reserved**. **WARNING: This AIA® Document is protected by U.S. Copyright Law and International Treaties. Unauthorized reproduction or distribution of this AIA® Document, or any portion of it, may result in severe civil and criminal penalties, and will be prosecuted to the maximum extent possible under the law.** This draft was produced by AIA software at 09:01:33 ET on 01/02/2019 under Order No.4449788754 which expires on 04/27/2019, and is not for resale.
User Notes: (1984719719)

cost to remedy the damage or loss to the extent such damage or loss is attributable to acts or omissions of the Owner or Architect or anyone directly or indirectly employed by either of them, or by anyone for whose acts either of them may be liable, and not attributable in whole or in part to the fault or negligence of the Contractor a Subcontractor, a Sub-subcontractor, or anyone directly or indirectly employed by any of them, or by anyone for whose acts they may be liable. The foregoing obligations of the Contractor are in addition to the Contractor's obligations under Section 3.18.

.1 The Contractor shall repair or replace any such damage at no additional cost to the Owner. Such repair or replacement shall be completed within one week of the damage or as otherwise directed by the Owner . If the Contractor fails or refuses to repair the damage promptly, the Owner may have the repair or replacement performed and charge the cost to the Contractor by way of offset or direct payment as elected by the Owner.

§ 10.2.7 The Contractor shall not load or permit any part of the construction or site to be loaded so as to endanger the safety of persons or property or cause damage or create an unsafe condition.

§ 10.2.8 All materials furnished and all Work installed shall comply with the rules and recommendations of the National Board of Fire Underwriters; with all applicable State and local codes, laws, ordinances, rules and regulations; with all requirements of local utility companies and with the recommendations of the Insurance Rating Organization having jurisdiction.

§ 10.2.9 All apparatus, equipment and construction such as ladders, scaffolds, chutes, etc. shall comply with the recommendations of the manual of Accident Prevention in Construction published by the Associated General Contractors of America.

§ 10.3 Hazardous Materials and Substances

§ 10.3.1 The Contractor is responsible for compliance with any requirements included in the Contract Documents, including but not limited to the Owner's Contractor Environmental Health and Safety Manual, regarding any material, substance, chemical, waste, product, derivative, compound, mixture, solid, liquid, mineral or gas, whether naturally occurring or manmade, that is hazardous, toxic, or words of similar import or regulatory effect, and any petroleum or petroleum-derived products, radon, radioactive materials or wastes, asbestos in any form, lead or lead-containing materials, urea formaldehyde foam insulation, polychlorinated biphenyls and any other regulated materials identified by the U.S. Environmental Protection Agency (EPA), the U.S. Occupational Health and Safety Administration (OSHA), the U.S. Department of Transportation (DOT) and/or the Nuclear Regulatory Commission (collectively, "Hazardous Materials"). If the Contractor believes its Work will disturb or otherwise implicate any actual or suspected Hazardous Material or encounters a Hazardous Material not addressed in the Contract Documents, the Contractor shall not disturb any such Hazardous Material, immediately report the condition to the Owner and the Architect in writing and take all necessary precautions to prevent release of and exposure to the Hazardous Materials and foreseeable bodily injury or death to persons resulting from such Hazardous Material. If such reasonable precautions will be inadequate to prevent the release of and exposure to Hazardous Materials, or foreseeable bodily injury and death, the Contractor shall, upon recognizing the condition, immediately stop Work in the affected area.

§ 10.3.1.1 Upon request, the Owner will provide the Contractor with a written copy of the Hazard Communication Program and chemical inventory for areas in which the Work will be performed. The Owner, upon request, will make available to the Contractor an opportunity to review the Material Safety Data Sheets ("MSDS") on file for areas where hazardous chemicals are used and stored and in which the Work will be performed.

§ 10.3.2 Upon receipt of the Contractor's notice, pursuant to Section 10.3.1 the Owner shall obtain the services of a qualified consultant to assess the presence or absence of the material or substance reported by the Contractor and, in the event such material or substance is found to be present, to cause it to be rendered harmless or otherwise abated. Upon written request, the Owner shall furnish in writing to the Contractor and Architect the names and qualifications of persons or entities who are to perform the assessments for the presence or absence of the material or substance or who are to perform the task of removal or safe

AIA Document A201™ – 2017. Copyright © 1911, 1915, 1918, 1925, 1937, 1951, 1958, 1961, 1963, 1966, 1970, 1976, 1987, 1997, 2007 and 2017 by The American Institute of Architects. **All rights reserved. WARNING: This AIA® Document is protected by U.S. Copyright Law and International Treaties. Unauthorized reproduction or distribution of this AIA® Document, or any portion of it, may result in severe civil and criminal penalties, and will be prosecuted to the maximum extent possible under the law.** This draft was produced by AIA software at 09:01:33 ET on 01/02/2019 under Order No.4449788754 which expires on 04/27/2019, and is not for resale.
User Notes: (1984719719)

containment of the material or substance. The Contractor and the Architect will promptly reply to the Owner in writing stating whether or not either has reasonable objection to the persons or entities proposed by the Owner. If either the Contractor or Architect has an objection to a person or entity proposed by the Owner, the Owner shall propose another to whom the Contractor and the Architect have no reasonable objection. When the Hazardous Material or substance has been rendered harmless or otherwise abated, Work in the affected area shall resume upon written agreement of the Owner and Contractor. By Change Order, the Contract Time shall be extended appropriately (provided the Contractor has demonstrated to the Owner's satisfaction that delay to address the Hazardous Material impacted the critical path of the construction schedule) and the Contract Sum shall be increased by the amount of the Contractor's reasonable additional costs of shutdown, delay, and start-up.

§ 10.3.3 Not Used.

§ 10.3.4 In no event shall the Owner have any responsibility for any substance or material that is brought to the Project site by the Contractor, any Subcontractor, Sub-subcontractor, any materialman or supplier or any entity for whom any of them is responsible. The Contractor agrees not to use any fills or other materials to be incorporated into the Work, which are hazardous, toxic or comprised of any items that are hazardous or toxic. In the event it is determined that materials that are hazardous, toxic or comprised of items that are hazardous or toxic have been used as fills or incorporated into the Work, the Contractor, at its sole expense, shall be responsible for immediate removal, proper disposal, and replacement of materials of the Work and surrounding areas so affected.

§ 10.3.5 The Contractor shall reimburse the Owner for the cost and expense the Owner incurs (1) for remediation of hazardous materials or substances the Contractor brings to the site and negligently handles; or (2) where the Contractor fails to perform its obligations under Section 10.3.1, except to the extent that the cost and expense are due to the Owner's fault or negligence.

§ 10.4 Emergencies

In an emergency affecting the safety of persons or property, the Contractor shall act, at the Contractor's discretion, to prevent threatened damage, injury or loss. Additional compensation or extension of time claimed by the Contractor on account of an emergency shall be determined as provided in Article 15 and Article 7. The Contractor shall promptly notify insurers, as applicable, the Architect and the Owner of the nature of the emergency. Immediately thereafter, the Contractor shall submit to the Architect and the Owner a written report including a description of the circumstances of the emergency and details of actions taken.

§ 10.5 Lockout/Tagout Procedures Required by OSHA

§ 10.5.1 The Contractor shall abide by all OSHA and Owner regulations and procedures pertaining to lockout and tagout of machines or equipment to prevent injuries by ensuring that hazardous forms of energy are isolated. This includes electrical, mechanical, hydraulic, pneumatic, chemical, thermal or other energy sources.

§ 10.7 Confined Space Entry

§ 10.7.1 The Contractor shall abide by all OSHA and Owner regulations and procedures required to implement a confined space entry permit program.

§ 10.8 Excavation and Trenching

§ 10.8.1 Any Work carried out under this Contract that will require excavation or trenching shall be carried out in accordance with all applicable Federal, State and Local rules and regulations, including OSHA regulations, and the Owner's applicable policies and procedures included in the Contract Documents.

§ 10.8.3 At a minimum, the Contractor shall comply with the Owner's Contractor Environmental Health and Safety Manual, which is available for review upon request and constitutes a Contract Document.

ARTICLE 11 INSURANCE AND BONDS

§ 11.1 Contractor's Insurance and Bonds

§ 11.1.1 The Contractor shall purchase and maintain insurance of the types and limits of liability, containing

AIA Document A201™ – 2017. Copyright © 1911, 1915, 1918, 1925, 1937, 1951, 1958, 1961, 1963, 1966, 1970, 1976, 1987, 1997, 2007 and 2017 by The American Institute of Architects. **All rights reserved.** **WARNING: This AIA® Document is protected by U.S. Copyright Law and International Treaties. Unauthorized reproduction or distribution of this AIA® Document, or any portion of it, may result in severe civil and criminal penalties, and will be prosecuted to the maximum extent possible under the law.** This draft was produced by AIA software at 09:01:33 ET on 01/02/2019 under Order No.4449788754 which expires on 04/27/2019, and is not for resale.
User Notes: (1984719719)

the endorsements, and subject to the terms and conditions, as described below, in the Agreement and, as applicable, elsewhere in the Contract Documents. The Contractor shall purchase and maintain the required insurance from an insurance company or insurance companies lawfully authorized to issue insurance in the jurisdiction where the Project is located. The Owner, the State of Connecticut and their respective officers, officials, agents, employees, boards and commissions shall be named as additional insureds as provided in the Agreement and as otherwise required by the Contract Documents.

§ 11.1.2 The Contractor shall furnish to the Owner, and deliver at the time of the execution of the Contract, Performance and Labor and Material Payment Bonds (each, a "Bond" and collectively, the "Bonds") pursuant to the requirements of Connecticut General Statutes §49-41,et seq. and the requirements of this Section 11.1. In all cases where the Contract Sum exceeds $100,000, the Contractor shall furnish the Bonds, each of which shall be in compliance with the Owner's required bond forms. The Bonds shall be provided by a Surety company licensed to do business in the State of Connecticut, that is acceptable to the Owner, and that is named in the current list of "Surety Companies Acceptable on Federal Bonds" as published in the "Treasury Department Circular 570". The Surety company's underwriting limitation, as further set forth in "Treasury Department Circular 570", must not be less than the Contract Sum. The amount of each Bond shall be equal to the Contract Sum. The Bonds shall name the Owner as "Obligee".

§ 11.1.3 In addition to the foregoing, each of the Bonds shall contain the following language: "In the event that the surety assumes the contract or obtains a bid or bids for completion of the Contract, the surety shall ensure that the contractor chosen to complete the Contract is prequalified pursuant to Section 4a-100 of the Connecticut General Statutes in the requisite classification and has the aggregate work capacity rating and single project limit necessary to complete the contract".

§ 11.1.4 Upon the request of any person or entity appearing to be a potential beneficiary of the Bond covering payment of obligations arising under the Contract, the Contractor shall promptly furnish a copy of such Bond or shall authorize a copy to be furnished.

§ 11.1.5 Notice of Cancellation or Expiration of Contractor's Required Insurance. Within three (3) business days after the date the Contractor becomes aware of an impending or actual cancellation or expiration of any insurance required by the Contract Documents, the Contractor shall provide notice to the Owner of such impending or actual cancellation or expiration. Upon receipt of notice from the Contractor, the Owner shall, unless the lapse in coverage arises from an act or omission of the Owner, have the right to stop the Work until the lapse in coverage has been cured by the procurement of replacement coverage by the Contractor. The furnishing of notice by the Contractor shall not relieve the Contractor of any contractual obligation to provide any required coverage. In the event of suspension by the Owner due to the Contractor's failure to maintain the required insurance, the Contractor shall be responsible for, and shall not receive an extension of the Contract Time in connection with, the delay in the Work arising from the suspension.

§ 11.2 Not Used.

§ 11.3 Waivers of Subrogation

§ 11.3.1 The Owner and Contractor waive all rights against (1) each other and any of their subcontractors, sub-subcontractors, agents, and employees, each of the other; (2) the Architect and Architect's consultants; and (3) Separate Contractors, if any, and any of their subcontractors, sub-subcontractors, agents, and employees, for damages caused by fire, or other causes of loss, to the extent those losses are covered by property insurance required by the Agreement or other property insurance applicable to the Project, except such rights as they have to proceeds of such insurance. The Owner or Contractor, as appropriate, shall require similar written waivers in favor of the individuals and entities identified above from the Architect, Architect's consultants, Separate Contractors, subcontractors, and sub-subcontractors. The policies of insurance purchased and maintained by each person or entity agreeing to waive claims pursuant to this Section 11.3.1 shall not prohibit this waiver of subrogation. This waiver of subrogation shall be effective as to a person or entity (1) even though that person or entity would otherwise have a duty of indemnification, contractual or otherwise, (2) even though that person or entity did not pay the insurance premium directly or indirectly, or (3) whether or not the person or entity had an insurable interest in the damaged property.

AIA Document A201™ – 2017. Copyright © 1911, 1915, 1918, 1925, 1937, 1951, 1958, 1961, 1963, 1966, 1970, 1976, 1987, 1997, 2007 and 2017 by The American Institute of Architects. **All rights reserved.** **WARNING: This AIA® Document is protected by U.S. Copyright Law and International Treaties. Unauthorized reproduction or distribution of this AIA® Document, or any portion of it, may result in severe civil and criminal penalties, and will be prosecuted to the maximum extent possible under the law.** This draft was produced by AIA software at 09:01:33 ET on 01/02/2019 under Order No.4449788754 which expires on 04/27/2019, and is not for resale.
User Notes: (1984719719)

§ 11.3.2 Not Used.

§ 11.4 Not Used.

§11.5 Adjustment and Settlement of Insured Loss

§ 11.5.1 A loss insured under the property insurance required by the Agreement shall be adjusted by the Owner and made payable to the Owner for the insureds, as their interests may appear, subject to requirements of any applicable mortgagee clause. The Owner shall pay the Architect and Contractor their just shares of insurance proceeds received by the Owner, and, by appropriate agreements, the Architect and Contractor shall make payments to their consultants and Subcontractors in a similar manner.

§ 11.5.2 Not Used.

§ 11.5.3 If the Contractor or any of its Subcontractors is a non-resident contractor, the Contractor and/or subcontractor shall comply with the requirements of Connecticut General Statutes Section 12-430(7) (the "Statute"), to the extent applicable. If the Contractor is a verified contractor as defined in the Statute, the Contractor shall provide to the Owner written verification of that status from the State Commissioner of Revenue Services. If the Contractor is an unverified contractor as defined in the Statute, the Contractor shall provide to the Owner proof that the Contractor has posted with the Commissioner of Revenue Services a surety bond in an amount equal to five percent (5%) of the Contract Sum and which is otherwise in compliance with the requirements of the Statute.

§ 11.4.3 If the Contractor proposes to utilize a Subcontractor Default Insurance program in lieu of requiring Subcontractors to provide surety bonds for the Project, the Contractor must demonstrate actual cost savings to the Owner of no less than 18% between the cost of such program and the cost of traditional Subcontractor surety bonds.

ARTICLE 12 UNCOVERING AND CORRECTION OF WORK

§ 12.1 Uncovering of Work

§ 12.1.1 If a portion of the Work is covered contrary to the Architect's request or to requirements specifically expressed in the Contract Documents, it must, if requested in writing by the Architect, be uncovered for the Architect's examination and be replaced at the Contractor's expense without a change in the Contract Time.

§ 12.1.2 If a portion of the Work has been covered that the Owner has not specifically requested to examine prior to its being covered, the Owner may request to see such Work and it shall be uncovered by the Contractor. If such Work is in accordance with the Contract Documents, the Contractor shall be entitled to an equitable adjustment to the Contract Sum and Contract Time as may be appropriate. If such Work is not in accordance with the Contract Documents, the costs of uncovering the Work, and the cost of correction shall be at the Contractor's expense and the Contractor shall not be entitled to an adjustment of the Contract Time.

§ 12.2 Correction of Work

§ 12.2.1 Before Substantial Completion

The Contractor shall promptly correct Work rejected by the Owner or failing to conform to the requirements of the Contract Documents, whether discovered before or after Substantial Completion and whether or not fabricated, installed or completed. Costs of correcting such rejected Work, including additional testing inspections, uncovering and replacement, and compensation for the Architect's and Owner services made necessary thereby, shall be at the Contractor's expense.

If prior to the date of Substantial Completion, the Contractor, a Subcontractor, a Sub-subcontractor or anyone for whom any of them is responsible uses or damages any portion of the Work, including, without limitation, mechanical, electrical, plumbing, and other building systems, machinery, equipment, or other mechanical device, the Contractor shall cause such item to be restored to "like new" condition at no expense to the Owner.

§ 12.2.2 After Substantial Completion

§ 12.2.2.1 In addition to the Contractor's obligations under Section 3.5 and extended warranties required by

AIA Document A201™ – 2017. Copyright © 1911, 1915, 1918, 1925, 1937, 1951, 1958, 1961, 1963, 1966, 1970, 1976, 1987, 1997, 2007 and 2017 by The American Institute of Architects. **All rights reserved. WARNING: This AIA® Document is protected by U.S. Copyright Law and International Treaties. Unauthorized reproduction or distribution of this AIA® Document, or any portion of it, may result in severe civil and criminal penalties, and will be prosecuted to the maximum extent possible under the law.** This draft was produced by AIA software at 09:01:33 ET on 01/02/2019 under Order No.4449788754 which expires on 04/27/2019, and is not for resale.
User Notes: (1984719719)

the Contract Documents, if, within one year after the date of Substantial Completion of the Work or designated portion thereof or after the date for commencement of warranties established under Section 9.8.4, or by terms of any applicable special warranty required by the Contract Documents, any of the Work is found to be not in accordance with the requirements of the Contract Documents, the Contractor shall correct it promptly at Contractor's sole expense after receipt of notice from the Owner to do so unless the Owner has previously given the Contractor a written acceptance of such condition. The Owner shall give such notice promptly after discovery of the condition. During the one-year period for correction of Work, if the Owner fails to notify the Contractor by the end of such one-year period and, thereafter, give the Contractor an opportunity to make the correction, the Owner waives the rights to require correction by the Contractor. If the Contractor fails to correct nonconforming Work within a reasonable time after receipt of notice from the Owner or Architect not to exceed thirty (30) days, the Owner may correct it in accordance with Section 2.5 or take such other commercially reasonable measures to recompense the Owner for its expenses, losses and damages arising from such nonconforming work.

§ 12.2.2.2 The one-year period for correction of Work shall be extended with respect to portions of Work first performed after Substantial Completion by the period of time between Substantial Completion and the actual completion of that portion of the Work.

§ 12.2.2.3 The one-year period for correction of Work shall not be extended by corrective Work performed by the Contractor pursuant to this Section 12.2.

§ 12.2.3 The Contractor shall remove from the site portions of the Work that are not in accordance with the requirements of the Contract Documents and are neither corrected by the Contractor nor accepted by the Owner.

§ 12.2.4 The Contractor shall bear the cost of correcting destroyed or damaged construction of the Owner or Separate Contractors, whether completed or partially completed, caused by the Contractor's correction or removal of Work that is not in accordance with the requirements of the Contract Documents.

§ 12.2.5 Nothing contained in this Section 12.2 shall be construed to modify the Contractor's obligations under Section 3.5 of these General Conditions or to establish a period of limitation with respect to other obligations the Contractor has under the Contract Documents. Establishment of the one-year period for correction of Work as described in Section 12.2.2 relates only to the specific obligation of the Contractor to correct the Work, and has no relationship to the time within which the obligation to comply with the Contract Documents may be sought to be enforced, nor to the time within which proceedings may be commenced to establish the Contractor's liability with respect to the Contractor's obligations other than specifically to correct the Work.

§ 12.3 Acceptance of Nonconforming Work

If the Owner prefers to accept Work that is not in accordance with the requirements of the Contract Documents, the Owner may do so instead of requiring its removal and correction, in which case the Contract Sum will be reduced as appropriate and equitable. Such adjustment shall be effected whether or not final payment has been made.

ARTICLE 13 MISCELLANEOUS PROVISIONS

§ 13.1 Governing Law

The Contract shall be governed by the law of the place where the Project is located, excluding that jurisdiction's choice of law rules.

§ 13.2 Successors and Assigns

§ 13.2.1 The Owner and Contractor respectively bind themselves, their partners, successors, assigns and legal representatives to the other party hereto and to partners, successors, assigns and legal representatives of such other party in respect to covenants, agreements and obligations contained in the Contract Documents. Except as provided in Section 13.2.2, neither party to the Contract shall assign the Contract as a whole without written consent of the other. If either party attempts to make an assignment without such consent, that party shall nevertheless remain legally responsible for all obligations under the Contract.

AIA Document A201™ – 2017. Copyright © 1911, 1915, 1918, 1925, 1937, 1951, 1958, 1961, 1963, 1966, 1970, 1976, 1987, 1997, 2007 and 2017 by The American Institute of Architects. **All rights reserved.** **WARNING: This AIA® Document is protected by U.S. Copyright Law and International Treaties. Unauthorized reproduction or distribution of this AIA® Document, or any portion of it, may result in severe civil and criminal penalties, and will be prosecuted to the maximum extent possible under the law.** This draft was produced by AIA software at 09:01:33 ET on 01/02/2019 under Order No.4449788754 which expires on 04/27/2019, and is not for resale.
User Notes: (1984719719)

§ 13.2.2 The Owner may, without the consent of the Contractor, assign the Contract to a lender providing construction financing for the Project, if the lender assumes the Owner's rights and obligations under the Contract Documents. The Contractor shall execute all consents reasonably required to facilitate the assignment.

§ 13.3 Rights and Remedies

§ 13.3.1 Duties and obligations imposed by the Contract Documents and rights and remedies available thereunder shall be in addition to and not a limitation of duties, obligations, rights, and remedies otherwise imposed or available by law.

§ 13.3.2 No action or failure to act by the Owner, Architect, or Contractor shall constitute a waiver of a right or duty afforded them under the Contract, nor shall such action or failure to act constitute approval of or acquiescence in a breach thereunder, except as may be specifically agreed upon in writing.

§ 13.4 Tests and Inspections

§ 13.4.1 Tests, inspections and approvals of portions of the Work shall be made at an appropriate time as required by the Contract Documents and by applicable laws, statutes, ordinances, codes, rules and regulations or lawful orders of public authorities having jurisdiction. Unless otherwise provided, the Contractor shall make arrangements for such tests, inspections and approvals with an independent testing laboratory or entity acceptable to the Owner, or with the appropriate public authority, and shall bear all related costs of tests, inspections and approvals. The Contractor shall give the Architect timely notice of when and where tests and inspections are to be made so that the Architect may be present for such procedures. The Owner shall bear costs of tests, inspections or approvals that do not become requirements until after bids are received or negotiations concluded. The Owner shall directly arrange and pay for tests, inspections, or approvals where building codes or applicable laws or regulations so require.

§ 13.4.2 If the Architect, Owner, or public authorities having jurisdiction determine that portions of the Work require additional testing, inspection, or approval not included under Section 13.4.1, the Architect will, upon written authorization from the Owner, instruct the Contractor to make arrangements for such additional testing, inspection, or approval, by an entity acceptable to the Owner, and the Contractor shall give timely notice to the Architect of when and where tests and inspections are to be made so that the Architect may be present for such procedures. Such costs, except as provided in Section 13.4.3, shall be at the Owner's expense. If the inspections and tests conducted under Section 13.4.1 or this Section 13.4.2 reveal a failure in a portion of the Work, the Owner may order the inspection and testing at the Contractor's expense of any and all portions of the Work that are identical or similar to the failing portion.

§ 13.4.3 If procedures for testing, inspection, or approval under Sections 13.4.1 and 13.4.2 reveal failure of the portions of the Work to comply with requirements established by the Contract Documents, all costs made necessary by such failure including those of repeated procedures and compensation for the Architect's and Owner services and expenses, shall be at the Contractor's expense.

§ 13.4.4 Required certificates of testing, inspection, or approval shall, unless otherwise required by the Contract Documents, be secured by the Contractor and promptly delivered to the Architect.

§ 13.4.5 If the Architect is to observe tests, inspections, or approvals required by the Contract Documents, the Architect will do so promptly and, where practicable, at the normal place of testing.

§ 13.4.6 Tests or inspections conducted pursuant to the Contract Documents shall be made promptly to avoid unreasonable delay in the Work.

§ 13.5 Interest Not Used.

§ 13.6 Compliance with Owner Policies and Guidelines

At a minimum, the Contractor shall comply with established Owner policies and guidelines, which have been previously provided to bidders and/or are available for review upon request. These policies are hereby

AIA Document A201™ – 2017. Copyright © 1911, 1915, 1918, 1925, 1937, 1951, 1958, 1961, 1963, 1966, 1970, 1976, 1987, 1997, 2007 and 2017 by The American Institute of Architects. **All rights reserved.** **WARNING: This AIA® Document is protected by U.S. Copyright Law and International Treaties. Unauthorized reproduction or distribution of this AIA® Document, or any portion of it, may result in severe civil and criminal penalties, and will be prosecuted to the maximum extent possible under the law.** This draft was produced by AIA software at 09:01:33 ET on 01/02/2019 under Order No.4449788754 which expires on 04/27/2019, and is not for resale.
User Notes: (1984719719)

incorporated by reference herein, including but not limited to: Policies on Lockout/Tagout; Confined Space Entry as referenced in the Contractor's Environmental Health and Safety Manual; Code of Conduct; Sexual Harassment; Racism and Acts of Intolerance; Smoking.

§ 13.7 Preference in Employment

§ 13.7.1 In the employment of labor to perform the work specified herein, preference shall be given to citizens of the United States, who are, and continuously for three months prior to the date hereof have been residents of the labor market areas, as established by the Labor Commissioner in which said work is to be done; and if no such qualified persons are available, then to citizens who have continuously resided in the county in which the work is to be performed for at least three months prior to the date hereof and then to citizens of the State who have continuously resided in the State at least three months prior to the date hereof. In no event shall said provisions be deemed to abrogate or supersede in any manner any provision regarding residence requirements contained in a Collective Bargaining Agreement to which the Contractor is a party.

§ 13.8 Minimum Wage Rates

§ 13.8.1 If the Project involves new construction of a building or other structure or improvement and the total cost of all Work to be performed by Contractors and Subcontractors is $1,000,000 or more or if the project involves remodeling, refurbishing, rehabilitation, alteration or repair of a building or other structure or improvement and such total cost is $100,000 or more then:

.1 The wages paid on an hourly basis to any person performing the work of any mechanic, laborer or worker on the work herein contracted to be done and the amount of payment or contribution paid or payable on behalf of each such person to any employee welfare fund, as defined in subsection (i) of Section 31-53 of the Connecticut General Statutes , shall be at a rate equal to the rate customary or prevailing for the same work in the same trade or occupation in the town in which such public works project is being constructed. Any contractor who is not obligated by agreement to make payment or contribution on behalf of such persons to any such employee welfare fund shall pay to each mechanic, laborer or worker as part of such person's wages the amount of payment or contribution for such person's classification on each pay day.

§ 13.8.2 The State of Connecticut Labor Department Wage Schedule ("Wage Schedule")(where required) has been provided to the Contractor and the Contractor acknowledges receipt the Wage Schedule and agrees to accept the current prevailing wage scale as well as any annual adjustment to the prevailing wage scale as provided by the Connecticut Department of Labor. Wage Rates will be posted each July 1st on the Department of Labor's website: www.ctdol.state.ct.us. No such prevailing wage adjustment will be considered a basis for an amendment to this Contract. The Wage Schedule is deemed to reflect customary or prevailing wages for the Project and is hereby incorporated and made a part of the Contract Documents. Wage Rates shall be paid pursuant to Sections 31-53 and 31-54 of the Connecticut General Statutes and any regulations issued thereunder.

§ 13.9 Hours of Labor Permitted

§ 13.9.1 Pursuant to Section 31-57 of the Connecticut General Statutes, as applicable, no person shall be employed to work or be permitted to work more than eight hours in any day or more than forty hours in any week on any work provided for in the Contract. The operation of such limitation of hours of work may be suspended during an emergency upon the approval of the Owner.

§ 13.10 Examining and Copying Contractor's Records

§ 13.10.1 The Contractor shall permit the Owner or its duly authorized representative to examine and copy books and records of the Contractor relative to charges for extra work, alleged breaches of contract, settlement of claims, or any other matter involving the Contractor's demand for added compensation from the Owner. The Contractor shall also permit such examination and copying of its records as the Owner may deem necessary, excepting papers and records preceding the execution of the Contract that are not a matter of record with the Owner, in order to determine that the Contractor has complied with all laws and regulations pertaining to the Contract, such as but not limited to Labor Compliance, Affirmative Action Program and Equal Employment Opportunity.

AIA Document A201™ – 2017. Copyright © 1911, 1915, 1918, 1925, 1937, 1951, 1958, 1961, 1963, 1966, 1970, 1976, 1987, 1997, 2007 and 2017 by The American Institute of Architects. **All rights reserved**. **WARNING: This AIA® Document is protected by U.S. Copyright Law and International Treaties. Unauthorized reproduction or distribution of this AIA® Document, or any portion of it, may result in severe civil and criminal penalties, and will be prosecuted to the maximum extent possible under the law.** This draft was produced by AIA software at 09:01:33 ET on 01/02/2019 under Order No.4449788754 which expires on 04/27/2019, and is not for resale.
User Notes: (1984719719)

§ 13.10.2 The Contractor further agrees that he shall keep all records relating to this Contract until the expiration of six (6) years after final payment under this Contract is made, or six (6) months after settlement of any disputes whichever may be later.

§ 13.10.3 The Contractor further agrees that Contractor and all Subcontractors shall permit the Owner, at its own expense, by its duly authorized representatives, to inspect and audit all their data, records and files pertaining to this Contract.

§ 13.11 System Layout Drawing

§ 13.11.1 System layouts indicated on the on the drawings are generally diagrammatic and locations and arrangements of items are approximate. Exact routing of conduit, wiring, location of fixtures, outlets, panels, piping, valves and all other equipment shall be governed by the structural conditions and obstructions. The entire layout shall be followed as closely as possible and the right is reserved by the Owner to reasonably change the locations to accommodate any conditions which may arise during the progress of the Work without additional compensation to the Contractor.

§ 13.12 Guaranty of Performance

§ 13.12.1 If the Contractor has submitted the financial statement of a parent or other affiliated entity in its Proposers Qualification Statement, or if pre-qualified, its application for pre-qualification and has also indicated in that submission that such parent or affiliate will guarantee the performance of the Contract, then the parent or affiliate shall execute, simultaneously, with the Contractor's execution of the Contract, a Guaranty in a form provided by and acceptable to the Owner.

§ 13.13 JOINT VENTURE

§ 13.13.1 If the Contractor is a joint venture, each joint venture partner shall be jointly, severally and individually responsible to the Owner for the performance of any and all obligations of the Contractor encompassed by the Contract Documents and as otherwise required by applicable law, and each joint venture partner shall be jointly, severally and individually liable to the Owner for any failures to perform such obligations in accordance with the Contract and such applicable law. In its dealings with the Owner, each joint venture partner shall have full authority to act in behalf of and bind the joint venture and any other joint venture partner. Each joint venture partner shall be considered to be the agent of the joint venture and of any other joint venture partner.

§13.14 Worker Geographic Distribution

§13.14.1 If the Project is a Covered Project (as defined hereinafter), the Contractor shall comply with the provisions of this Section 13.14.

§13.14.2 The Contractor shall submit to the Owner a plan for encouraging the hiring of Workers (as defined hereinafter) with Residence (as defined hereinafter) in the State of Connecticut.

§13.14.3 Following the close of each Quarter (as defined hereinafter), the Contractor shall submit a Worker Geographic Distribution Report (as defined hereinafter) to the Owner in a form satisfactory to the Owner. The "Worker Geographic Distribution Report" is a report that shall provide the following information for each Worker paid, during the most recently closed Quarter, for Work performed on the Project:

.1 The numbers of hours of Work for which such Worker was paid during such Quarter.
.2 The Wages (as defined hereinafter) paid to such Worker during such Quarter.
.3 The Residence of such Worker as of the close of such Quarter.

§13.14.4 The Worker Geographic Distribution Report shall not contain any personally identifiable information about a Worker.

§13.14.5 The following terms shall have the meaning assigned below for the purposes of this Section 13.14.

AIA Document A201™ – 2017. Copyright © 1911, 1915, 1918, 1925, 1937, 1951, 1958, 1961, 1963, 1966, 1970, 1976, 1987, 1997, 2007 and 2017 by The American Institute of Architects. **All rights reserved.** **WARNING: This AIA® Document is protected by U.S. Copyright Law and International Treaties. Unauthorized reproduction or distribution of this AIA® Document, or any portion of it, may result in severe civil and criminal penalties, and will be prosecuted to the maximum extent possible under the law.** This draft was produced by AIA software at 09:01:33 ET on 01/02/2019 under Order No.4449788754 which expires on 04/27/2019, and is not for resale.
User Notes: (1984719719)

.1 "Covered Project" is a project that is both subject to Section 31-53(a) of the Connecticut General Statutes and for which the Contract Sum is $1,000,000 or greater.

.2 "Quarter" means a calendar quarter of each calendar year.

.3 "Residence" is the state and town in which a Worker resides, as reflected in the payroll records of such Worker's employer.

.4 "Subcontractor" is any subcontractor or sub-subcontractor of the Contractor, which subcontractor or sub-subcontractor employs Workers on the Project.

.5 "Wages" are the wages that are subject to Section 31-53(a) of the Connecticut General Statutes (including any amounts paid to an employee welfare fund).

.6 "Worker" is an employee of the Contractor or a Subcontractor (as defined hereinabove), which employee is performing Work on the Project and whose wages for such Work is subject to Section 31-53(a) of the Connecticut General Statutes.

ARTICLE 14 TERMINATION OR SUSPENSION OF THE CONTRACT

§ 14.1 Termination by the Contractor

§ 14.1.1 The Contractor may terminate the Contract if the Work is stopped for a period of sixty (60) consecutive days through no act or fault of the Contractor, a Subcontractor, a Sub-subcontractor, their agents or employees, or any other persons or entities performing portions of the Work, for any of the following reasons:

.1 Issuance of an order of a court or other public authority having jurisdiction that requires all Work to be stopped; or

.2 An act of government, such as a declaration of national emergency that requires all Work to be stopped.

§ 14.1.2 Not Used.

§ 14.1.3 If one of the reasons described in Section 14.1.1 exists, the Contractor may, upon seven (7) days' written notice to the Owner, the Initial Decision Maker and the Architect, terminate the Contract and recover from the Owner payment for Work executed in accordance with the Contract Documents and for proven loss with respect to materials, equipment, tools, and construction equipment and machinery which loss arises as a direct result of such termination.

§ 14.1.4 If the Work is stopped for a period of sixty (60) consecutive days through no act or fault of the Contractor, a Subcontractor, a Sub-subcontractor, or their agents or employees or any other persons or entities performing portions of the Work because the Owner has repeatedly failed to fulfill the Owner's obligations under the Contract Documents with respect to matters important to the progress of the Work, the Contractor may, upon seven (7) additional days' notice to the Owner and the Architect, terminate the Contract and recover from the Owner as provided in Section 14.1.3.

§ 14.2 Termination by the Owner for Cause

§ 14.2.1 The Owner may terminate, without prejudice and without waiving any other right or remedy the Owner may have, the Contract if the Contractor

.1 refuses or fails to supply enough properly skilled workers or proper materials;

.2 fails to make payment to Subcontractors for materials or labor in accordance with the respective agreements between the Contractor and the Subcontractors;

.3 disregards applicable laws, statutes, ordinances, codes, rules and regulations, or lawful orders of a public authority;

.4 otherwise is guilty of substantial breach of a provision of the Contract Documents;

.5 Fails to furnish the Owner with assurances satisfactory to the Owner evidencing the Contractor's ability to complete the Work in compliance with all requirements of the Contract Documents;

.6 Refuses or fails to prosecute the Work or any separable part, with the diligence that will ensure its completion in accordance with the approved construction schedule for the Project as it may be adjusted in accordance with the Contract Documents; or

.7 Fails to comply with laws, rules, regulations, or directives regarding job site safety; or to comply with the provisions of the Owner's Contractor Environmental Health and Safety

AIA Document A201™ – 2017. Copyright © 1911, 1915, 1918, 1925, 1937, 1951, 1958, 1961, 1963, 1966, 1970, 1976, 1987, 1997, 2007 and 2017 by The American Institute of Architects. **All rights reserved.** **WARNING: This AIA® Document is protected by U.S. Copyright Law and International Treaties. Unauthorized reproduction or distribution of this AIA® Document, or any portion of it, may result in severe civil and criminal penalties, and will be prosecuted to the maximum extent possible under the law.** This draft was produced by AIA software at 09:01:33 ET on 01/02/2019 under Order No.4449788754 which expires on 04/27/2019, and is not for resale.
User Notes: (1984719719)

Manual, or orders or directives regarding safety issued by the Owner pursuant to the Contract.

§ 14.2.2 When any of the reasons described in Section 14.2.1 exists and the Owner determines that sufficient cause exists to justify such action, the Owner may, without prejudice to any other rights or remedies of the Owner and after giving the Contractor and the Contractor's surety, if any, seven (7) days' notice, terminate employment of the Contractor and may, subject to any prior rights of the surety:

.1 Exclude the Contractor from the site and take possession of all materials, equipment, tools, and construction equipment and machinery thereon owned by the Contractor;

.2 Accept assignment of subcontracts pursuant to Section 5.4; and

.3 Finish the Work by whatever reasonable method the Owner may deem expedient. Upon written request of the Contractor, the Owner shall furnish to the Contractor a detailed accounting of the costs incurred by the Owner in finishing the Work.

In lieu of terminating the employment of the Contract as regards the entirety of the Work, the Owner may elect to limit such termination to a portion of the Work and to require the Contractor to proceed with the balance of the Work in accordance with the Contract Documents.

§ 14.2.3 When the Owner terminates the Contract for one of the reasons stated in Section 14.2.1, the Contractor shall not be entitled to receive further payment until the Work is finished.

§ 14.2.4 If the unpaid balance of the Contract Sum exceeds costs of finishing the Work, including compensation for the Architect's services and expenses made necessary thereby, and other damages incurred by the Owner and not expressly waived, such excess shall be retained by the Owner. If such costs and damages exceed the unpaid balance, the Contractor shall pay the difference to the Owner. The amount to be paid to the Contractor or Owner, as the case may be, shall be certified by the Architect and Initial Decision Maker, upon application, and this obligation for payment shall survive termination of the Contract.

§ 14.3 Suspension by the Owner for Convenience

§ 14.3.1 The Owner may, without cause and without prejudice and without waiving any other right or remedy the Owner may have, order the Contractor in writing to suspend, delay or interrupt the Work in whole or in part for such period of time as the Owner may determine.

§ 14.3.2 The Contract Sum and Contract Time shall be adjusted for increases in the cost and time caused by suspension, delay, or interruption under Section 14.3.1. Adjustment of the Contract Sum shall include profit as and to the extent provided in the Contract Documents. No adjustment shall be made to the extent

.1 that performance is, was or would have been so suspended, delayed or interrupted by another cause for which the Contractor is responsible; or

.2 that an equitable adjustment is made or denied under another provision of the Contract.

§ 14.4 Termination by the Owner for Convenience

§ 14.4.1 The Owner may, at any time, without prejudice and without waiving any other right or remedy the Owner may have, terminate the Contract in whole or in part for the Owner's convenience and without cause. Termination by the Owner under this Section shall be by a notice of termination delivered to the Contractor specifying the extent of termination and the effective date.

§ 14.4.2 Upon receipt of a notice of termination for convenience, the Contractor shall immediately and in accordance with instructions from the Owner, proceed with performance of the following duties (regardless of whether or not there is agreement between the Owner and the Contractor as to amounts due to the Contractor and remaining unpaid hereunder):

.1 Cease operations as specified in the notice;

.2 Place no further orders and enter into no further Subcontracts for materials, labor, services or facilities except as necessary to complete Work not terminated;

.3 except for Work directed to be performed prior to the effective date of termination stated in the notice, terminate all existing subcontracts and purchase orders and enter into no further subcontracts and purchase orders.

AIA Document A201™ – 2017. Copyright © 1911, 1915, 1918, 1925, 1937, 1951, 1958, 1961, 1963, 1966, 1970, 1976, 1987, 1997, 2007 and 2017 by The American Institute of Architects. **All rights reserved.** **WARNING: This AIA® Document is protected by U.S. Copyright Law and International Treaties. Unauthorized reproduction or distribution of this AIA® Document, or any portion of it, may result in severe civil and criminal penalties, and will be prosecuted to the maximum extent possible under the law.** This draft was produced by AIA software at 09:01:33 ET on 01/02/2019 under Order No.4449788754 which expires on 04/27/2019, and is not for resale.
User Notes: (1984719719)

.4 Proceed to complete the performance of Work not terminated; and

.5 Take actions that may be necessary or that the Owner may direct for the protection and preservation of the terminated Work.

§ 14.4.3 Upon such termination for the Owner's convenience, the Contractor shall be entitled to recover as its sole remedy for such termination, payment for terminated Work performed in accordance with the Contract Documents prior to the effective date of termination, payment for items associated with the terminated Work that were properly and timely purchased or fabricated off the Project site, delivered and stored in accordance with the Owner's instructions and satisfactorily evidenced demobilization costs. The Contractor hereby waives and forfeits all other claims for payment and damages, including without limitation, anticipated profits.

§**14.4.4** In calculating the amount payable to the Contractor by the Owner upon termination for the Owner's convenience, the Owner shall be credited for (1) payments previously made to the Contractor for the terminated portion of the Work; (2) claims which the Owner has against the Contractor under the Contract and (3) the value of the materials, supplies, equipment or other items that are to be disposed of by the Contractor that are part of the Contract Sum.

§**14.4.5** The payment to the Contractor pursuant to this Section may not exceed the total Contract Sum as reduced by:

.1 The amount of payments previously made by the Owner to the Contractor; and

.2 The portion of the Contract Sum allocable to Work not terminated.

ARTICLE 15 CLAIMS AND DISPUTES

§ 15.1 Claims

§ 15.1.1 Definition

A Claim is a properly noticed demand or assertion by one of the parties seeking, as a matter of right, payment of money, a change in the Contract Time or other relief with respect to the terms of the Contract. The term "Claim" also includes other disputes and matters in question between the Owner and Contractor arising out of or relating to the Contract. The responsibility to substantiate Claims shall rest with the party making the Claim. This Section 15.1.1 does not require the Owner to file a Claim in order to impose liquidated damages in accordance with the Contract Documents.

§ 15.1.2 Time Limits on Claims

Claims by the Contractor against the Owner must be initiated within twenty-one (21) days after the occurrence of the event giving rise to such Claim or within fourteen (14) days after the Contractor first recognizes the condition giving rise to the Claim, whichever is later. Claims may also be reserved by the Contractor in writing within the time limits set forth in this Section 15.1.2. If a Claim is reserved, the Resolution of Claims and Disputes procedures described in this Article 15 shall not commence until a written notice from the Contractor in compliance with the requirements of Section 15.1.3 is received by the Owner. No such claim shall be valid unless so made. The Contractor waives all Claims and causes of action not commenced in accordance with this Section 15.1.

§ 15.1.3 Notice of Claims

§ 15.1.3.1 Claims by the Contractor, where the condition giving rise to the Claim is first discovered prior to expiration of the period for correction of the Work set forth in Section 12.2.2, shall be initiated by notice to the Owner and to the Initial Decision Maker with a copy sent to the Architect.

§ 15.1.3.2 Claims by either the Owner or Contractor, where the condition giving rise to the Claim is first discovered after expiration of the period for correction of the Work set forth in Section 12.2.2, shall be initiated by notice to the other party and the Initial Decision Maker.

§ 15.1.3.3 All notices of Claims (whether before or after the period for correction of Work) must state the following in bold capital letters: "**THIS COMMUNICATION CONSTITUTES A NOTICE OF CLAIM**". Any communication that does not include such statement shall not constitute a Claim under the

AIA Document A201™ – 2017. Copyright © 1911, 1915, 1918, 1925, 1937, 1951, 1958, 1961, 1963, 1966, 1970, 1976, 1987, 1997, 2007 and 2017 by The American Institute of Architects. **All rights reserved. WARNING: This AIA® Document is protected by U.S. Copyright Law and International Treaties. Unauthorized reproduction or distribution of this AIA® Document, or any portion of it, may result in severe civil and criminal penalties, and will be prosecuted to the maximum extent possible under the law.** This draft was produced by AIA software at 09:01:33 ET on 01/02/2019 under Order No.4449788754 which expires on 04/27/2019, and is not for resale.
User Notes: (1984719719)

Contract. As regards a notice of reservation of Claim, such notice must state the following in bold capital letters: "**THIS COMMUNICATION CONSTITUTES NOTICE OF RESERVATION OF A CLAIM**". Any communication that does not include such statement shall not constitute a reservation of a Claim under the Contract. In addition, any notice of Claim or reservation of Claim must clearly identify the alleged cause and the nature of the Claim and include data and information then available to the Contractor to enable and to facilitate the Owner's verification and evaluation of the Claim.

§ 15.1.4 Continuing Contract Performance

§ 15.1.4.1 Pending final resolution of a Claim, except as otherwise agreed in writing or as provided in Article 14, the Contractor shall proceed diligently with performance of the Contract and the Owner shall continue to make payments in accordance with the Contract Documents.

§ 15.1.4.2 The Contract Sum and Contract Time shall be adjusted in accordance with the Initial Decision Maker's decision, subject to the right of either party to proceed in accordance with this Article 15. The Architect will issue Certificates for Payment in accordance with the decision of the Initial Decision Maker.

§ 15.1.5 Claims for Additional Cost

If the Contractor wishes to make a Claim for an increase in the Contract Sum, notice as provided in Section 15.1.3 shall be given before proceeding to execute the portion of the Work that is the subject of the Claim. Prior notice is not required for Claims relating to an emergency endangering life or property arising under Section 10.4.

§15.1.5.2 If the Contractor believes that additional cost is involved for reasons including but not limited to (1) a written interpretation from the Architect; (2) an order by the Owner to stop the Work where the Contractor was not at fault; (3) a written order for a minor change in the Work issued by the Architect; (4) failure of payment by the Owner; (5) termination of the Contract by the Owner; (6) Owner's suspension; or (7) other reasonable grounds, the Claim shall be made in accordance with the provisions of this Article 15.

§ 15.1.6 Claims for Additional Time

§ 15.1.6.1 If the Contractor wishes to make a Claim for an increase in the Contract Time, notice as provided in Section 15.1.3 shall be given. The Contractor's Claim shall include an estimate of cost and of probable effect of delay on progress of the Work. No such claim shall be valid unless made in accordance with the provisions of this Article 15. In the case of a continuing delay, only one Claim is necessary.

§ 15.1.6.2 If adverse weather conditions are the basis for a Claim for additional time, such Claim shall be documented by data substantiating that weather conditions were abnormal for the period of time, could not have been reasonably anticipated and had an adverse effect on the scheduled construction.

§ 15.1.7 Waiver of Claims for Consequential Damages

Not Used.

§ 15.1.8 Injury or Damage to Person or Property. If the Contractor suffers injury or damage to person or property because of an act or omission of the Owner, or of others for whose acts such party is legally responsible, written notice of such injury or damage, whether or not insured, shall be given to the other party within a reasonable time not exceeding twenty-one (21) days after discovery. The notice shall provide sufficient detail to enable the other party to investigate the matter.

§ 15.1.9 Claims for Concealed or Unknown Conditions: If, upon or subsequent to the Contractor's and its Subcontractors' site visits pursuant to Section 3.2.1 and performance of the tests, examinations, and inspections required by Section 3.2.2, the Contractor encounters conditions at the site that are (1) subsurface or otherwise concealed physical conditions that differ materially from those indicated in the Contract Documents or (2) unknown physical conditions of an unusual nature that differ materially from those ordinarily found to exist and generally recognized as inherent in construction activities of the character provided for in the Contract Documents, the Contractor will promptly provide notice to the Owner and the Architect before conditions are disturbed and in no event later than 5 days after first observance of the conditions. The Architect will promptly investigate such conditions and, if the Architect determines that they

AIA Document A201™ – 2017. Copyright © 1911, 1915, 1918, 1925, 1937, 1951, 1958, 1961, 1963, 1966, 1970, 1976, 1987, 1997, 2007 and 2017 by The American Institute of Architects. **All rights reserved**. **WARNING: This AIA® Document is protected by U.S. Copyright Law and International Treaties. Unauthorized reproduction or distribution of this AIA® Document, or any portion of it, may result in severe civil and criminal penalties, and will be prosecuted to the maximum extent possible under the law.** This draft was produced by AIA software at 09:01:33 ET on 01/02/2019 under Order No.4449788754 which expires on 04/27/2019, and is not for resale.
User Notes: (1984719719)

differ materially and cause an increase or decrease in the Contractor's cost of, or time required for, performance of any part of the Work, will recommend an equitable adjustment in the Contract Sum or Contract Time, or both. If the Architect determines that the conditions at the site are not materially different in the respects noted above and that no change in the terms of the Contract is justified, the Architect shall promptly notify the Owner and Contractor in writing, stating the reasons. Any claim by the Contractor in opposition to such determination must be made within 21 days after the Architect has given notice of the recommendation. The Owner will have the final authority to accept or reject the Architect's recommendations, which decision by the Owner shall be subject to further proceedings pursuant to Article 15.

§ 15.2 Initial Decision

§ 15.2.1 Claims by the Contractor, excluding those where the condition giving rise to the Claim is first discovered after expiration of the period for correction of the Work set forth in Section 12.2.2 or arising under Sections 10.3, 10.4, and 11.5, shall be referred to the Initial Decision Maker for initial decision. The Owner will serve as the Initial Decision Maker, unless otherwise indicated in Section 6.1 of the Agreement. Except for those Claims excluded by this Section 15.2.1, an initial decision shall be required as a condition precedent to mediation of any Claim arising prior to the date final payment is due, regardless of (1) whether such matters relate to execution and progress of the Work, or (2) the extent to which the Work has been completed. The decision by the Initial Decision Maker in response to a Claim shall not be a condition precedent to arbitration or litigation in the event (1) the position of Initial Decision Maker is vacant, (2) the Contractor has not provided substantiating evidence of its Claim; or (3) the Initial Decision Maker has failed to take action required under Section 15.2.2 within thirty (30) days after the Claim is made.

§ 15.2.2 The Initial Decision Maker will review Claims by the Contractor and within thirty (30) days of the receipt of a Claim take one or more of the following actions: (1) request additional supporting data from the claimant or a response with supporting data from the other party; (2) reject the Claim in whole or in part; (3) approve the Claim; (4) suggest a compromise; or (5) advise the parties that the Initial Decision Maker is unable to resolve the Claim if the Initial Decision Maker lacks sufficient information to evaluate the merits of the Claim or if the Initial Decision Maker concludes that, in the Initial Decision Maker's sole discretion, it would be inappropriate for the Initial Decision Maker to resolve the Claim.

§ 15.2.3 In evaluating Claims of the Contractor, the Initial Decision Maker may, but shall not be obligated to, consult with or seek information from either party or from persons with special knowledge or expertise who may assist the Initial Decision Maker in rendering a decision.

§ 15.2.4 If the Initial Decision Maker requests a party to provide a response to a Claim of the Contractor or to furnish additional supporting data, such party shall respond, within ten (10) days after receipt of such request, and shall either (1) provide a response on the requested supporting data; (2) advise the Initial Decision Maker when the response or supporting data will be furnished; or (3) advise the Initial Decision Maker that no supporting data will be furnished. Upon receipt of the response or supporting data, if any, the Initial Decision Maker will either reject or approve the Claim in whole or in part.

§ 15.2.4.1 If a Claim of the Contractor has not been resolved after consideration of the foregoing, the Initial Decision Maker will render a written decision on the claim, including any change in the Contract Sum or Contract Time or both, which decision shall be final and binding but subject to meeting and mediation pursuant to Section 15.3 of this document and arbitration or litigation pursuant to Connecticut General Statutes Section 4-61 and Section 15.4 of this Contract to the extent applicable.

§ 15.2.5 Not Used.

§ 15.2.6 Not Used.

§ 15.2.6.1 Not Used.

§ 15.2.7 In the event of a Claim against the Contractor, the Owner may, but is not obligated to, notify the surety, if any, of the nature and amount of the Claim. If the Claim relates to a possibility of a Contractor's

AIA Document A201™ – 2017. Copyright © 1911, 1915, 1918, 1925, 1937, 1951, 1958, 1961, 1963, 1966, 1970, 1976, 1987, 1997, 2007 and 2017 by The American Institute of Architects. **All rights reserved**. **WARNING: This AIA® Document is protected by U.S. Copyright Law and International Treaties. Unauthorized reproduction or distribution of this AIA® Document, or any portion of it, may result in severe civil and criminal penalties, and will be prosecuted to the maximum extent possible under the law.** This draft was produced by AIA software at 09:01:33 ET on 01/02/2019 under Order No.4449788754 which expires on 04/27/2019, and is not for resale.
User Notes: (1984719719)

default, the Owner may, but is not obligated to, notify the surety and request the surety's assistance in resolving the controversy.

§ 15.2.8 Not Used.

§ 15.3 Mediation

§ 15.3.1 Claims of the Contractor except those waived as provided for in Section 9.10.5 shall be submitted to the meeting and mediation process described in the Sections which follow, prior to and as a precondition to the Contractor pursuing any other available remedy. Claims by the Owner, at the option of the Owner, may be submitted to such meeting process and/or mediation process, and, in such event, Contractor shall be required to submit to and participate in such a meeting and/or mediation. The meeting shall be between the parties and attended by individuals with decision-making authority regarding the dispute, to attempt in good faith to negotiate a resolution of the dispute.

§ 15.3.2 The meeting referenced in Section 15.3.1 shall be held promptly, but not less than fourteen (14) days after a party's request for the meeting. The Contractor shall not submit any claim to mediation in accordance with the provisions of Sections 15.3.1 through 15.3.6 until fourteen (14) days after the date of the meeting.

§ 15.3.3 In connection with any such mediation, a request for mediation shall be made in writing, delivered to the other party to the Contract. The request may be made concurrently with the filing of applicable binding dispute resolution proceedings but, in such event, mediation shall proceed in advance of binding dispute resolution proceedings, which shall be stayed pending mediation for a period of sixty (60) days from the date of filing, unless stayed for a different period of time by agreement of the parties or as modified by court order.

§ 15.3.4 The parties will jointly appoint a mutually acceptable mediator, seeking assistance in such regard from a mutually agreed upon dispute resolution entity if they have been unable to agree upon such appointment within twenty (20) days from the submittal of the request for mediation. If the parties are unable to agree on the dispute resolution entity, the mediation shall be administered by the American Arbitration Association in accordance with its Construction Industry Mediation Procedures in effect on the date of this Contract.

§ 15.3.5 The parties agree to participate in good faith in the mediation and negotiations related thereto for a period of sixty (60) days from the date of submittal, or until the parties reach an impasse as evidenced by a letter from a party to the mediator, whichever first occurs. If the parties are not successful in resolving the dispute through mediation, then the parties may pursue other legal remedies available to them.

§ 15.3.6 Should the Owner request, the Contractor agrees to participate as a party in any mediation proceeding between the Owner and the Architect or other Consultant for the Project in which construction deficiencies, contract breaches, or other alleged wrongful acts by the Contractor are alleged.

§ 15.4 ARBITRATION OR LITIGATION OF CLAIMS

§ 15.4.1 Not Used.

§ 15.4.1.1 Not Used.

§ 15.4.2 Not Used.

§ 15.4.3 Not Used.

§ 15.4.4 Should the Owner have a claim against the Contractor, the parties agree that the Owner, whether or not it elects to proceed with the meeting process or mediation described in Section 15.3, shall have the option of either prosecuting the claim against the Contractor in an appropriate court of general jurisdiction, or by arbitrating the claim by filing a demand for arbitration pursuant to the rules of a dispute resolution entity

AIA Document A201™ – 2017. Copyright © 1911, 1915, 1918, 1925, 1937, 1951, 1958, 1961, 1963, 1966, 1970, 1976, 1987, 1997, 2007 and 2017 by The American Institute of Architects. **All rights reserved.** **WARNING: This AIA® Document is protected by U.S. Copyright Law and International Treaties. Unauthorized reproduction or distribution of this AIA® Document, or any portion of it, may result in severe civil and criminal penalties, and will be prosecuted to the maximum extent possible under the law.** This draft was produced by AIA software at 09:01:33 ET on 01/02/2019 under Order No.4449788754 which expires on 04/27/2019, and is not for resale.
User Notes: (1984719719)

agreed upon by the parties, except that if the parties cannot agree upon a dispute resolution entity, the rules of the American Arbitration Association shall apply.

§ 15.4.5 Should the Contractor have a claim against the Owner which has not been resolved by mediation or any other procedure set forth in this Contract, the Contractor's rights to assert its claim against the Owner shall be subject to the provisions of Connecticut General Statutes Section 4-61.

§ 15.4.6 Consolidation or Joinder

§ 15.4.6.1 Should either the Contractor institute an arbitration to the extent authorized by Section 4-61 of the Connecticut General Statutes or the Owner institute an arbitration as set forth herein, the Contractor agrees that any such arbitration may be consolidated, at the Owner's discretion, with any arbitration proceeding involving the Owner and the Architect or other Consultant for the Project in which construction or design deficiencies, breaches of contract, or any other alleged wrongful acts by the Contractor or Architect are alleged.

§ 15.4.6.2 Not Used.

§ 15.4.6.3 Not Used.

ARTICLE 16 OWNER POLICIES

§ 16.1 The Contractor shall, at no additional cost to the Owner, comply with all policies and procedures of the Owner. In the event the Owner establishes new policies or procedures following the execution of the Contract, or makes modifications to policies or procedures in existence at the time of Contract execution, the Contractor shall comply with such new or modified policies or procedures upon receipt of written notice of such new policies or procedures.

ARTICLE 17 SOVEREIGN IMMUNITY

§ 17.1 The parties acknowledge and agree that nothing in this Contract shall be construed as a waiver by the State of Connecticut or the Owner of any rights or defenses of sovereign immunity, which it may have had, now has, or will have with respect to all matters arising out of this Contract. To the extent that this provision conflicts with any other provision hereunder, this provision shall govern.

These General Conditions may be executed in counterparts, and each counterpart shall have the same force and effect as an original and, when taken together, shall constitute one and the same instrument and an effective binding agreement on the part of each of the undersigned. Execution of a facsimile or PDF copy shall have the same force and effect as execution of an original. Signed copies of this Agreement may be faxed and e-mailed with the same force and effect as if the originally executed General Conditions had been delivered.

Acknowledging agreement to these General Conditions as of _____, 20___.

OWNER *(Signature)*	**CONTRACTOR** *(Signature)*
Scott A. Jordan Executive VP for Administration & CFO Duly Authorized	« Duly Authorized »« »
(Printed name and title)	*(Printed name and title)*
Date:_____	Date:_____

AIA Document A201™ – 2017. Copyright © 1911, 1915, 1918, 1925, 1937, 1951, 1958, 1961, 1963, 1966, 1970, 1976, 1987, 1997, 2007 and 2017 by The American Institute of Architects. **All rights reserved.** **WARNING: This AIA® Document is protected by U.S. Copyright Law and International Treaties. Unauthorized reproduction or distribution of this AIA® Document, or any portion of it, may result in severe civil and criminal penalties, and will be prosecuted to the maximum extent possible under the law.** This draft was produced by AIA software at 09:01:33 ET on 01/02/2019 under Order No.4449788754 which expires on 04/27/2019, and is not for resale.
User Notes: (1984719719)

DRAFT

AIA Document A201™ – 2017. Copyright © 1911, 1915, 1918, 1925, 1937, 1951, 1958, 1961, 1963, 1966, 1970, 1976, 1987, 1997, 2007 and 2017 by The American Institute of Architects. **All rights reserved. WARNING: This AIA® Document is protected by U.S. Copyright Law and International Treaties. Unauthorized reproduction or distribution of this AIA® Document, or any portion of it, may result in severe civil and criminal penalties, and will be prosecuted to the maximum extent possible under the law.** This draft was produced by AIA software at 09:01:33 ET on 01/02/2019 under Order No.4449788754 which expires on 04/27/2019, and is not for resale.
User Notes: (1984719719)

PROJECT MANUAL

Project # 300098

ROOF REPLACEMENT
ACADEMIC BUILDING
AVERY POINT CAMPUS

Construction Documents
Volume 1 of 1

UCONN
UNIVERSITY OF CONNECTICUT

State of Connecticut

University of Connecticut
Office of Planning, Design and Construction

Susan Herbst
President

Prepared By:

SIMPSON GUMPERTZ & HEGER, INC.
41 SEYON STREET
WALTHAM, MA 02453

23 January 2019

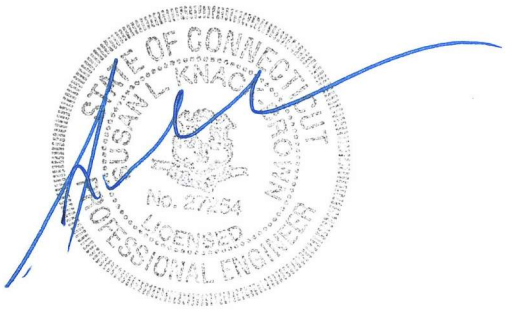

Bid Set

Roof Replacement
Academic Building
University of Connecticut Avery Point Campus
Groton, CT

SIMPSON GUMPERTZ & HEGER INC.
41 Seyon Street, Building 1, Suite 500
Waltham, MA 02453

Tel.: 781/907-9000
Fax: 781/907-9009

Contact: Annemarie DerAnanian

23 January 2019

UConn Project 300098

---

pages

SPECIFICATIONS

Division 1 – General Requirements

01 1000	Summary	1 –	12
01 2100	Allowances	1 –	4
01 2200	Unit Prices	1 –	5
01 2300	Alternates	1 –	2
01 2500	Substitution Procedures	1 –	5
01 2600	Contract Modification Procedures	1 –	11
01 3100	Project Management and Coordination	1 –	24
01 3200	Construction Progress Documentation	1 –	12
01 3233	Photographic Documentation	1 –	4
01 3300	Submittal Procedures	1 –	14
01 4000	Quality Requirements	1 –	11
01 5000	Temporary Facilities and Controls	1 –	31
01 5640	Tree Protection and Preservation	1 –	15
01 5719	Temporary Environmental Controls	1 –	9
01 6000	Product Requirements	1 –	7
01 7300	Execution	1 –	11
01 7700	Closeout Procedures	1 –	13
01 7823	Operation and Maintenance Data	1 –	11
01 7839	Project Recording Documents	1 –	5
01 7900	Demonstration and Training	1 –	6

Division 2 - Removals

02 5000	Selective Removals	1 –	9
02 8200	Selective Hazardous Building Materials Abatement Demolition	1 –	4
02 8213	Asbestos Abatement	1 –	38
02 8313	Lead-Based Paint Awareness	1 –	12
02 8416	Universal Waste Removal and Recycling	1 –	9
02 8432	PCBs Assumed Greater than 50 PPM Sealant Remediation	1 –	34

Division 3 - Concrete

03 0100	Concrete Deck Repair	1 –	10

Division 4 - Masonry

04 2000	Unit Masonry	1 –	9

Division 5 - Metals

05 5000	Miscellaneous Metals	1 –	5

Division 6 – Carpentry

06 1000	Rough Carpentry	1 –	6

Division 7 – Thermal and Moisture Protection

07 3100	Asphalt Shingle Roofing	1 –	12
07 5000	Thermoplastic Membrane Roofing	1 –	21
07 6000	Sheet Metal Cladding and Flashing	1 –	14
07 9200	Joint Sealants	1 –	6

Division 8 – Doors and Windows

08 1000	Metal Doors and Frames and Hardware	1 –	9

Division 9

09 2000	Painting	1 –	8

APPENDIX

Limited Asbestos Bulk Sampling and Lead-Based Paint Survey Report
FM Global Plan Review Letters
FM Global Checklist for Roofing Contractor

SECTION 01-1000

SUMMARY

PART 1 – GENERAL

1.01 RELATED DOCUMENTS

A. Drawings and general provisions of the Contract, including General and Supplementary Conditions and other Division 01 Specification Sections, apply to this Section.

1.02 SUMMARY

A. Section Includes:

1. Related Documents
2. Summary
3. Project information.
4. Work covered by Contract Documents.
5. Work under separate contracts.
6. Definitions
7. Time of Completion.
8. Documents required before execution of the Contract.
9. Access to site and use of the Site.
10. Coordination with occupants.
11. Work restrictions.
12. Prohibited Items
13. Work Sequence.
14. Miscellaneous provisions.

B. Related Requirements:

1. Division 01 Section "Temporary Facilities and Controls" for limitations and procedures governing temporary use of Owner's facilities.

2. Division 01 Section “Temporary Tree and Planting Protection” for general protection and pruning of existing trees and plants that are affected by the execution of the Work.

a. Division 01 Section “Submittal Procedures” for submittal requirements prior to start of work.

1.03 PROJECT INFORMATION

A. Project Identification: Roof Replacement, Academic Building, Avery Point Campus, UConn Project 300098, SGH Project 170710.01.

1. Project Location: Academic Building, Avery Point Campus, University of Connecticut, 1084 Shennecossett Road, Groton, Connecticut 06340.

B. Owner: University of Connecticut

1. Owner’s Representative: University Planning, Design, and Construction, University of Connecticut, 31 LeDoyt Road Unit 3038, Storrs, Connecticut 06269-3038.

C. Engineer: Simpson Gumpertz & Heger Inc., 41 Seyon Street, Building 1, Suite 500, Waltham, Massachusetts 02453.

D. Other Owner Consultants: The Owner has retained the following design professionals who have prepared designated portions of the Contract Documents:

1. Asbestos/Environmental Design Services: Langan Engineering and Environmental Services, Inc., 555 Long Warf Drive, New Haven, CT 06511 has prepared the following portions of the Contract Documents:

a. Drawing HBM-01

b. Specification Sections:

(1) 01 2200 – Unit Prices (as applicable to hazardous material abatement)

(2) 02-8200 – Selective Hazardous Building Materials Abatement Demolition

(3) 02-8213 – Asbestos Abatement

(4) 02-8313 – Lead-Based Paint Awareness

(5) 02-8416 – Universal Waste Removal and Recycling

(6) 02-8432 – PCBs Assumed Greater than 50 PPM Sealant Remediation

1.04 WORK COVERED BY CONTRACT DOCUMENTS

A. The Work of this Project is defined by the Contract Documents and consists of the following:

1. Main Building Roof: Remove existing multi-ply built up roofs to concrete deck and provide PVC membrane roof system with associated insulation, cover board, and perimeter and penetration flashing. Raise existing mechanical equipment, providing new structural steel supports. Disconnect, raise, reinstall, and reconnect mechanical equipment as necessary to complete the work. Provide guardrail system.

2. Lecture Hall Roof: Remove the bottom five feet of the asphalt shingle roof, gutters and down leaders. Provide new gutter and down leaders. Provide replacement asphalt shingle roof system, including self-adhered membrane underlayment. Provide bird deterrent wire at the shingle roof ridge and hips; replacing individual hip shingles are required to install.

3. Lecture Hall Walls: Remove existing windows, trim and flashing, infill openings with CMU, and provide metal panel system on the exterior walls above the roof (including plywood sheathing and high-temperature self-adhered membrane). Repair interior finishes.

4. Stair Penthouse Walls: Remove existing vinyl cladding system (including weather barrier, flashing, and wood blocking). Remove existing windows, door and perimeter flashing. Infill windows openings with glass block. Provide replacement door sized to accommodate increased insulation thickness. Provide metal panel system on the exterior walls (including plywood sheathing and high-temperature self-adhered membrane). Provide perimeter flashing and fenestration flashing, including tie-in with existing stair penthouse roof.

5. Alternate 1: Remove existing single-ply roofs and provide PVC membrane roof system on the stair penthouse roof and two lower stair tower roofs including insulation, cover board, and all perimeter flashing.

6. Alternate 2: Replace entire asphalt shingle roof. Provide self-adhered membrane underlayment, felt underlayment, perimeter and penetration flashing, and asphalt shingles.

7. Abate hazardous materials as noted.

8. Removal of all debris caused by this Contract.

9. Protection of the public, building, grounds from damage during this contract is the responsibility of the Contractor for this project at all times.

10. Repair or replace landscaping including trees, shrubs or other planting disturbed during the Work of the contract with new to match existing, unless otherwise noted. Regrade and reseed any grass area damaged as a result of

the Work. Repair any walkways or paved areas damaged as a result of the Work.

1.05 WORK UNDER SEPARATE CONTRACTS

A. General: Cooperate fully with contractors that may have been issued separate contract(s) to perform certain construction operations at the site prior to construction activity under this contract so work on those contracts may be carried out smoothly, without interfering with or delaying work under this Contract or other contracts. Coordinate the Work of this Contract with work performed under separate contracts.

1.06 DEFINITIONS UNDER THE CONTRACT DOCUMENTS

A. Architect/Engineer: The term used to designate the Professional Consultant who contracts with the Owner or Design Builder to provide Architectural, Engineering, Interior Design, Commissioning services for the Project. The Architect/Engineer is a separate consultant and not an agent of the Owner. The term includes any associates or sub-consultants employed or contracted by the Architect/Engineer to assist in providing the overall services. Such position shall be implied that they are the Architect/Engineer of record.

B. Contract Documents: The Contract between Owner and Contractor signed by the Owner and the Contractor and any documents expressly incorporated therein for the Project. Such incorporated documents customarily include the Contract and General Conditions, any Supplemental General Conditions, any Special Conditions, the plans and the specifications, and all modifications, including addenda and subsequent Change Orders.

C. Contractor: The person or entity with whom the Owner has directly entered into a contractual agreement to do the Work. Applies to Construction Manager, General Contractor or Prime Contractor.

Companies that are owned or operated by the same individual or entity, close relations, parent company or subsidiary, who operate under the same address and/or building, has either directly or indirectly any degree of ownership, management or control of another corporation, company or partnership; has directly or indirectly close relations or family members, share the same or adjacent space addresses or share resources to perform work as a joint venture formally or informally; is viewed as a signatory employer and not as separate trade supplier or installers who subcontracts and/or supply to each other. Such entities are viewed as a single pooled resource and therefore not separate unto each other.

D. Day: Means a calendar day, 24-hour period. All response times and schedules shall be based on a calendar day, unless specifically noted otherwise.

E. Daily Construction Report: A written daily log recording the day’s construction site activities conditions and progress.

F. Daily Additional Work Tickets: Recording the day’s trade labor work performed for a change in the work issued by a CCD.

G. Drawing: A page or sheet of the Plan which presents a graphic representation, showing the technical information, design, location, and dimensions of various elements of the Work. The graphic representations include, but are not limited to, plan views, elevations, transverse and longitudinal sections, large and small scale sections and details, isometrics, diagrams, schedules, tables and/or pictures.

H. Like New Condition: The appearance of looking new having no marks, chips, or cracks.

I. Notice to Proceed: A written notice given by the Owner to the Contractor (with a copy to A/E) fixing the date on which the Contract time will commence for the Contractor to begin the prosecution of the Work in accordance with the requirements of the Contract Documents. The Notice to Proceed will customarily identify a Contract Completion Date.

J. Owner: Office of University Planning, Design and Construction.

K. Project: The term used instead of the specific or proper assigned title of the entire undertaking which includes, but is not limited to, the "Work" described by the Contract Documents.

L. Project Manager: The Project Manager as used herein shall be the Owner's designated representative on the Project. The Project Manager shall be the person through whom the Owner generally conveys decisions. The Owner may change the Project Manager from time to time or may appoint an interim Project Manager.

M. Site: Shall mean the location at which the Work is performed or is to be performed. Also referred to as Work Zone, Site Logistics Plan, and Construction Area.

N. Specifications: That part of the Contract Documents containing the written administrative requirements and the technical descriptions of materials, equipment, construction systems, standards, and workmanship which describe the proposed Work in sufficient detail and provide sufficient information for the Contractor to perform the Work.

O. Subcontractor: A person or entity having a direct or indirect contract with the Contractor for the performance of the Work. Subcontractor includes any person or entity who provides on-site labor but does not include any person or entity who only furnishes or supplies materials for the Project.

A person or entity that provides and installs product received from a wholesaler or distributor and not directly from the manufacturer/fabricator/producer, are viewed as a Dealer. Dealer entities are recognized as Subcontractors and shall follow the same requirements under the contractor documents. Dealers shall disclose their net costs for materials and equipment from where they purchase their materials.

A person or entity that has either directly or indirectly any degree of ownership, management or control of another corporation, company or partnership; directly or indirectly with family members, share the same or adjacent space addresses or share resources to perform work as a joint venture formally or informally; is viewed as a signatory employer. Such circumstances shall be viewed as a single entity and

not as sub-tiers or separate supplier and installer. Where the contract documents refer to the “Contractor”, the requirements under the contract shall also apply to the Subcontractor.

P. Submittals: All shop, fabrication, setting and installation drawings, diagrams, illustrations, schedules, samples, and other data required by the Contract Documents which are specifically prepared by or for the Contractor to illustrate some portion of the Work and all illustrations, brochures, standard schedules, performance charts, instructions, diagrams and other information prepared by a Supplier and submitted by the Contractor to illustrate material or equipment conformance of some portion of the Work with the requirements of the Contract Documents.

Q. Substantial Completion: The entire work shall not be limited to physical construction. The Work for Substantial Completion shall include aspects of general conditions and general requirements.

R. Supplier: A manufacturer, fabricator, wholesaler or distributor, who provides material for the Project but does not provide on-site labor. A subcontractor or sub-tier subcontractor cannot be also a material supplier. See definition of Subcontractor which addresses Dealers.

S. Traffic Control: A person who is appropriately trained and certified to provide traffic control flagging services. On any State roads running through any University campus, traffic control shall be performed by University Police.

T. Time for Completion: The number of consecutive calendar days following the issuance of the Notice to Proceed which the Contractor has to substantially complete all Work required by the Contract. When the Notice to Proceed is issued, it states a Contract Completion Date, which has been set by the Owner based on the Time for Completion.

U. Work: The services performed under this Contract including, but not limited to, furnishing labor, and furnishing and incorporating materials and equipment into the construction. The Work also includes the entire completed construction, or the various separately identifiable parts thereof, required to be furnished under the Contract Documents.

1.07 TIME OF COMPLETION

A. The established Substantial Completion Date or number of consecutive calendar days (if specifically outlined) following the issuance of the Notice to Proceed that the Contractor has to substantially complete all Work required by the Contract. Work required by the project shall commence immediately upon receipt of a Notice to Proceed.

1. The Contractor shall obtain the Certificate of Substantial Completion as defined in the Contract Documents within 42 calendar days of the Notice to Proceed.

2. Substantial Completion as defined in the Contract Documents must be achieved and evidenced by a Certificate of Substantial Completion no later than 42 calendar days of Notice to Proceed

B. Due to the nature of this institution, it is required that the academic schedule must be maintained. Contractor shall cooperate and coordinate with the Owner to assure that the academic schedule will be maintained.

1.08 DOCUMENTS REQUIRED BEFORE EXECUTION OF A CONTRACT

A. Contractor shall provide the following documents for the scope review meeting or if there is no scope review meeting provide the list of required documents within the time period outlined within the Letter of Intent to award:

1. Project Specific Milestone Construction Schedule in sufficient detail as required under Section 01-3200 Construction Progress Documentation.

2. Labor Rates for trade labor work self-performed by the Contractor shall be submitted utilizing the most current labor rate form template provided by the Owner. Labor Rates shall be reviewed and accepted by the Owner and are established for the life of the project. See Section on Contract Modifications for more on Labor Rate requirements. Labor Rate template can be found at the following weblink: https://updc.uconn.edu/contractors-working-at-uconn/

1.09 ACCESS TO SITE AND USE OF THE SITE

A. General: Contractor shall have limited use of Project site for construction operations as indicated on Drawings by the Contract limits and as indicated by requirements of this Section.

B. Use of Site: Limit use of Project site to areas indicated; allow for Owner occupancy and use by the public. Do not disturb portions of Project site beyond areas in which the Work is indicated.

1. Limits: Confine construction operations to areas within the Project limits indicated in the contract documents. Portions of the site beyond areas in which construction operations are indicated are not to be disturbed.

a. Changes to the location of the identified perimeter contract limits, including access to the project site shall not be assumed by the Contractor. Contractor must submit a detailed narrative to the Architect and Owner on impacts to constructability as to why the contracted Project limits cannot be maintained.

b. Restore all lawn, sidewalk, paved areas damaged by vehicles and or construction activities to their original or better condition. See Section on Temporary Facilities and Controls for more details.

c. All grounds including construction site within contract limit shall be kept neat and orderly at all times.

2. Driveways, Walkways and Entrances: Keep driveways and entrances serving premises clear and available to Owner, Owner's employees, other contractors and emergency vehicles at all times. Do not use these areas for parking or storage of materials.

    a. Schedule deliveries to minimize space and time requirements for storage of materials and equipment on-site.

3. Burial of Waste Materials: Do not dispose of organic and hazardous material on site, either by burial or by burning.

4. Construction Entrances:

    a. Contractor shall prevent sediment from being transported onto paved areas and roads by construction vehicles exiting the project site. Contractor shall be responsible for immediate clean-up of soils or sediments tracked onto paved off site areas including but not limited to sweeping with motorized sweepers and power washing paved areas as required.

        (1) Schedule deliveries to minimize use of driveways and entrances by construction operations.

        (2) Schedule deliveries to minimize space and time requirements for storage of materials and equipment on-site.

5. Condition of Existing Building:

    a. Maintain portions of existing building affected by construction operations in a weather tight condition throughout construction period. Repair damage caused by construction operations. Take all precautions necessary to protect the building and its occupants during the construction period.

6. Condition of existing perimeter Buildings and Landscape:

    a. Protect surrounding buildings from noise, dust/dirt and pollution caused by the construction of the project. Take all precaution necessary to protect the surrounding space and maintain controls.

7. Contractor Parking:

    a. All Contractors working for the University of Connecticut at the Storr's and regional campuses will follow the University Policy on Contractor Parking. A modest quantity of campus parking spaces shall be made available within the contract limits. Such policy can be located utilizing the following link; http://policy.uconn.edu/2016/02/04/contractor-parking-policy.

8. Access to the Campus and Site:

a. Road Restrictions Map can be found at the following web link: https://updc.uconn.edu/contractors-working-at-uconn/

C. Refer to Section 01-3300 Part 2.1.L Safety Plan for submittal requirements prior to site access

D. Refer to Section 01-5000 Temporary Facilities and Controls for additional requirements

E. Refer to Section 01-5719 Temporary Environmental Controls for additional requirements

1.10 COORDINATION WITH OCCUPANTS

A. Full Owner Occupancy: Owner will occupy site and building(s) during entire construction period. Cooperate with Owner during construction operations to minimize conflicts and facilitate Owner usage. Perform the Work so as not to interfere with Owner's day-to-day operations. Maintain existing exits unless otherwise indicated.

1. Maintain access to existing walkways, corridors, and other adjacent occupied or used facilities. Do not close or obstruct walkways, corridors, or other occupied or used facilities without written permission from Owner and approval of authorities having jurisdiction.

2. Notify Owner not less than 72 hours in advance of activities that will affect Owner's operations.

B. Partial Owner Occupancy: The Owner reserves the right to occupy and to place and install equipment in completed areas of the building, prior to Substantial Completion provided that such occupancy does not interfere with completion of the Work. Such placing of equipment and partial occupancy shall not constitute acceptance of the total Work or infer that the Contractor has met Substantial Completion.

1. A Certificate of Substantial Completion will be executed for each specific portion of the Work to be occupied prior to Owner occupancy.

2. This project has been identified as a Threshold Building subject to the requirements of Connecticut General Statutes Section 29-276b. Obtain a Certificate of Occupancy from Building Officials prior to Owner occupancy.

3. Certifications. The Contractor at completion of construction shall provide to the University a “Certificate of Substantial Compliance with the State Building and Fire Safety Codes” bearing original signatures of an officer of the company stating: “This is the CERTIFY that in my professional opinion the complete structure/renovations described above is in substantial compliance with the approved construction documents on file with the University of Connecticut. Minor deviations and special stipulations are noted below (if any)”.

4. Prior to partial Owner occupancy, mechanical and electrical systems shall be fully operational. Required inspections and tests shall have been successfully completed. Upon recognition of mechanical and electrical systems being fully functioning and successfully inspected and tested for completeness, the Owner will provide operation and maintenance of mechanical and electrical systems in occupied portions of the building.

1.11 WORK RESTRICTIONS

A. Work Restrictions, General: Comply with restrictions on construction operations, the use of public streets and with other requirements of authorities having jurisdiction.

1. Work off Campus or on the edge of any campus where town residence property back up to or in close proximity to the Work, shall adhere to the Owner's noise limits.

a. On-Site Work Hours: Limit work in the existing building to normal business working hours of 7:00 a.m. to 4:30 p.m., Monday through Friday, unless otherwise indicated. Permission must be requested and approved in writing prior to performance of the work outside the normal working hours or on a State Holiday.

b. Early Morning Hours for Dormitory Work: No noisy activities where the noise exceeds 55 dBA can take place prior to 8:00 am when working on or in the vicinity of a student dormitory.

B. Refer to Section 01-5719 Temporary Environmental Controls for other acceptable noise levels during working hours.

C. Existing Utility Interruptions: Do not interrupt utilities serving facilities occupied by Owner or others unless permitted under the following conditions and then only after providing temporary utility services according to requirements indicated:

1. Obtain Owner Representative written permission before proceeding with utility interruptions.

D. Noise, Vibration, and Odors: Coordinate operations that may result in high levels of noise and vibration, odors, or other disruption to Owner occupancy with Owner.

1. Notify Owner Representative not less than two days in advance of proposed disruptive operations.

2. Obtain Owner's written permission before proceeding with disruptive operations

3. Noise which exceeds 55 db at the site perimeter will not be permitted between the hours of 8:00 PM and 8:00 AM.

4. No Work may be conducted during University exam periods, commencement/graduation day, student move in/convocation days (includes Fridays), move out days (including Fridays) and Open House Fall and Spring

without the written permission from the Owner. Exam periods that may affect this project are scheduled per attached link: http://www.registrar.uconn.edu/calendar.htm

E. Deviations: Contractor shall not assume deviations to the noise restrictions.

1. Deviation is dependent upon availability of University supervisory personnel.

2. Certain aspects of the project, may require work to be performed off hours outside of the requirements the Contractor or Owner determines that work on this project must be performed during a time other than normal working hours of the University, costs for any premium time must be included in the Base Bid.

F. Prohibited Items: Refer to the latest version of the University's Contractor Environmental Health and Safety Manual for products and substances which are prohibited on University property.

1.12 WORK SEQUENCE

A. The responsibility of phasing the Work falls entirely on the Contractor.

1.13 MISCELLANEOUS PROVISIONS

A. Certifications

1. The Contractor, at completion of construction, shall provide to the University a "Certificate of Substantial Compliance" bearing original signatures of an officer of the company stating: "this is to CERTIFY that, in my professional opinion, the complete structure/renovations described above is in substantial compliance with the approved construction documents on file with the University of Connecticut. Minor deviations and special stipulations are noted below (if any)"

2. The Contractor shall provide licensed and/or specific certification(s) of subcontractors who self-perform the work. Contractor shall provide a list of suppliers and all subcontractors and sub-tier subcontractors that have performed work on the project under the contract. Refer to submittal and close out provisions for additional requirements.

B. Owner Supplied Documents

1. The majority of the Owner's buildings were constructed prior to 1978 and are likely to have painted surfaces contacting lead based paint. Any information the Owner provides on known locations of lead based paint or other hazardous materials is offered, in good faith for information only, solely for the purpose of placing the Contractor in receipt of all information known to the University at this time. Unless otherwise provided, this data is not to be considered a part of the contract documents. The University does not warrant or represent that the information contained in these reports is complete or

accurate but only that it constitutes a disclosure of the information known to the Owner at this time regarding these conditions.

2. Original construction drawings are provided for information and reference only and do not represent exact conditions existing in the buildings. The Contractor is responsible for all work described in the scope of work regardless of information provided in the reference drawings. This information is offered in good faith for information only, solely for the purpose of placing the Contractor in receipt of all information known to the University at this time. Unless otherwise provided, this data is not to be considered a part of the contract documents. The University does not warrant or represent that the information contained in these reports is complete or accurate but only that it constitutes a disclosure of the information known to the Owner at this time regarding these conditions.

PART 2 – PRODUCTS (NOT USED)

PART 3 – EXECUTION (NOT USED)

END OF SECTION

SECTION 01-2100

ALLOWANCE

PART 1 – GENERAL

1.01 RELATED DOCUMENTS

A. Drawings and general provisions of the Contract, including General and Supplementary Conditions and other Division 01 Specification Sections, apply to this Section.

1.02 SUMMARY

A. Section includes administrative and procedural requirements governing allowances.

1. Certain items are specified in the Contract Documents by allowances. Allowances have been established in lieu of additional requirements and to defer selection of actual materials and equipment to a later date when direction will be provided to Contractor. If necessary, additional requirements will be issued by Change Order.

B. Types of allowances include the following:

1. Value Allowance

2. An amount established in the Contract Documents for inclusion in the Contract Sum to cover the cost of prescribed items not specified in detail, and as shown in the Allowance Schedule. Quantity Allowances.

3. An amount which is attributable to a discrete quantity to be carried. Unit costs applicable to a quantity allowance, shall be used for values associated.

C. Related Requirements:

1. Division 01 Section "Unit Prices" for procedures for using unit prices.

2. Divisions 02 through 33 Sections for items of Work covered by allowances.

1.03 SELECTION AND PURCHASE

A. Within the initial submitted CPM schedule, reflect the dates when final selection and purchase of each product or system described by an allowance must be completed to avoid delaying the Work. Such dates shall represent what the supplier’s lead time for delivery of product through its installation and commissioning (where applicable).

B. At Architect's request, obtain proposals for each allowance for use in making final selections, include recommendations that are relevant to performing the Work.

C. Purchase products and systems specified by the Architect/Engineer.

1.04 SUBMITTALS

A. Labor hours shall have pre-approved hourly rates. Failure of the Contractor to obtain pre-approved hourly rates prior to use of the allowance, shall not relieve the Contractor from reconciliation of the allowance upon final receipt of approved labor rates. Adjustments to the previous use shall be made accordingly.

B. Submit proposals for purchase of products or systems included in allowances, in the form specified for Change Orders.

C. Submit invoices or delivery/weigh slips to show actual quantities of materials delivered to or removed from the site for use in fulfillment of each allowance.

D. Submit time sheets and other documentation to show labor time and cost for installation of allowance items that include installation as part of the allowance.

E. Coordinate and process submittals for allowance items in same manner as for other portions of the Work.

1.05 UNUSED MATERIALS

A. Return unused materials to the manufacturer or supplier for credit to the Owner, after installation has been completed and accepted.

B. Where it is not economically feasible to return unused material for credit and when requested by the Owner, prepare unused material for the Owner's storage, and deliver to the Owner's storage space as directed. Otherwise, disposal of excess material is the Contractor's responsibility.

1.06 COORDINATION

A. Coordinate allowance items with other portions of the Work. Furnish templates as may be required to coordinate installation.

1.07 ALLOWANCES

A. Allowance shall include cost to Contractor of specific products and materials ordered by Owner or selected by Architect/Engineer under allowance and shall include freight**,** and delivery to Project site.

B. Unless otherwise indicated, Contractor's costs for receiving and handling at Project site, labor, installation, overhead and profit and similar costs related to products and materials under allowance shall be included as part of the Contract Sum and not part of the allowance.

1.08 ADJUSTMENT OF ALLOWANCES

A. Allowance Adjustment: To adjust allowance amounts, prepare a Proposed Change Order based on the difference between purchase amount and the allowance, multiplied by final measurement of work-in-place where applicable. If applicable,

include reasonable allowances for cutting losses, tolerances, mixing wastes, normal product imperfections, and similar margins.

1. Include installation costs in purchase amount only where indicated as part of the allowance.

2. If requested, prepare explanation and documentation to substantiate distribution of overhead costs and other margins claimed.

3. Submit substantiation of a change in scope of work, if any, claimed in Change Orders related to unit-cost allowances.

4. Owner reserves the right to establish the quantity of work-in-place by independent quantity survey, measure, or count.

5. Remaining balance values in an allowance cannot be used to compensate overages in another allowance without prior written change management document approval from the Owner.

B. Submit claims for increased costs because of a change in scope or nature of the allowance described in the Contract Documents, whether for the purchase order amount or Contractor's handling, labor, installation, overhead, and profit.

1. Do not include Contractor's or subcontractor's indirect expense in the Change Order cost amount unless it is clearly shown that the nature or extent of work has changed from what could have been foreseen from information in the Contract Documents.

2. No change to Contractor's indirect expense is permitted for selection of higher- or lower-priced materials or systems of the same scope and nature as originally indicated.

1.09 ALLOWANCE CLOSE OUT

A. Any unused portion of the allowance, whether it is value allowance or quantity allowance, shall be credited to the Owner. Any unused portion of the allowance shall be reviewed by the owner to determine the amount of credit, based on actual invoices, delivery slips, etc.

PART 2 – PRODUCTS (NOT USED)

PART 3 – EXECUTION

3.01 EXAMINATION

A. Examine products covered by an allowance promptly on delivery for damage or defects. Return damaged or defective products to manufacturer for replacement.

3.02 PREPARATION

A. Coordinate materials and their installation for each allowance with related materials and installations to ensure that each allowance item is completely integrated and interfaced with related work.

3.03 SCHEDULE OF ALLOWANCES

A. Allowance No.1: Quantity Allowance: Include 10 square feet of shallow unsound concrete removal and repair, as specified in Division 03 Section "Concrete Deck Repair"

1. Coordinate quantity allowance adjustment with unit-price requirements in Division 01 Section "Unit Prices."

B. Allowance No. 2: Quantity Allowance: Include 10 cubic feet of deep (greater than 1-1/2 in. depth) unsound concrete removal, install concrete patch reinforcement, and repair, as specified in Division 03 Section "Concrete Deck Repair."

1. Coordinate quantity allowance adjustment with unit-price requirements in Division 01 Section "Unit Prices."

END OF SECTION

SECTION 01-2200

UNIT PRICES

PART 1 – GENERAL

1.01 RELATED DOCUMENTS

A. Drawings and general provisions of the Contract, including General and Supplementary Conditions and other Division 01 Specification Sections, apply to this Section.

1.02 SUMMARY

A. Section includes administrative and procedural requirements for unit prices.

1. A unit price is an amount stated on the Proposal Form or in the Specifications as a price per unit of measurement for materials or services that will be added to or deducted from the Contract Sum by Change Order in the event the quantities of Work required by the Contract Documents are increased or decreased. Should the number of units anticipated substantially increase by more than ten (10) percent, such unit price shall be renegotiated.

2. Upon request, provide a complete breakdown of how the unit price was calculated. Unit Prices include all necessary material, delivery, equipment and manpower, overhead and profit, and applicable taxes.

3. Refer to individual Specification Sections for construction activities requiring the establishment of unit prices. Methods of measurement and payment for unit prices are specified in those Sections.

B. Related Requirements:

1. Division 01 Section "Contract Modification Procedures" for procedures for submitting and handling Change Orders.

2. Division 01 Section "Quality Requirements" for general testing and inspecting requirements.

1.03 DEFINITIONS

A. Unit price is an amount incorporated in the Agreement, applicable during the duration of the Work as a price per unit of measurement for materials, equipment, or services, or a portion of the Work, added to or deducted from the Contract Sum by appropriate modification, if the scope of Work or estimated quantities of Work required by the Contract Documents are increased or decreased.

1.04 PROCEDURES

A. Unit prices include all necessary material, plus cost for delivery, installation, insurance, applicable taxes, overhead and profit.

B. Measurement and Payment: See individual Specification Sections for work that requires establishment of unit prices. For adjustment of the Contract Sum, track and provide supporting documentation (delivery or removal/disposal tickets) as deemed necessary to confirm Unit quantities provided or removed. Such quantities shall be tracked against any specific “Allowance” line item which may be included within the base contract value. Contractor must report status of Unit Price Allowances regularly and not exceed such allowance value without prior authorization from the Owner. Unit Price that does not have an allowance applied to it shall be treated with a CCD until all quantities have been determined. Owner reserves the right to reject Contractor's measurement of work-in-place that involves use of established unit prices and to have this work measured, at Owner's expense, by an independent surveyor acceptable to Contractor. Should it be determined that the work measured by the independent surveyor is five (5) or more percent less than the Contractor’s reported measurement, Contractor shall be responsible for the cost associated with the independent survey and adjustment to the measurement.

C. List of Unit Prices: A schedule of unit prices is included in Part 3. Specification Sections referenced in the schedule contain requirements for materials described under each unit price.

PART 2 – PRODUCTS (NOT USED)

PART 3 – EXECUTION

3.01 SCHEDULE OF UNIT PRICES

A. Unit Price 1: Concrete roof deck shallow repairs.

1. Description: Remove unsound roof deck concrete and repair with specified concrete repair material, as required, according to Division 03 Section "Concrete Deck Repairs."

2. Unit of Measurement: Square foot of concrete removed and repaired, based on survey of area removed.

3. Quantity Allowance: Coordinate unit price with allowance adjustment requirements in Division 01 Section "Allowances."

B. Unit Price No. 2: Concrete roof deck deep repairs.

1. Description: Remove unsound roof deck concrete greater than 1-½ in. deep, install concrete patch reinforcement, and repair with specified concrete repair material, as required, according to Division 03 Section "Concrete Deck Repairs."

2. Unit of Measurement: Cubic foot of concrete removed and repaired, based on survey of volume removed.

3. Quantity Allowance: Coordinate unit price with allowance adjustment requirements in Division 01 Section "Allowances."

C. Unit Price No. 3: Small Containment Preparation.

1. Description: Small Containment Preparation (Less than 160 square\260 linear feet of asbestos containing material). Pricing for containments with larger amounts of materials are to be INCLUDED in the unit prices themselves listed below. There is no separate unit price for containments with larger amounts.

2. Unit of Measurement: Per containment.

D. Unit Price No. 4: Floor Tile/Flooring Materials and Mastic Removal and Disposal as ACM

1. Description: Floor Tile/Flooring Materials and Mastic (Includes All layers of wood, carpeting, multiple layers of floor tiles/ flooring materials/ wood/ ceramic/ terazza/ concrete /mastics, levelastics, contaminated materials, etc.) Removal and Disposal as ACM.

2. Unit of Measurement: Square foot.

E. Unit Price No. 5: Mudded Pipe Fitting Insulation Removal and Disposal as ACM.

1. Description: Mudded Pipe Fitting Insulation Removal and Disposal as ACM.

2. Unit of Measurement: Per fitting/joint.

F. Unit Price No. 6: Roof Drain Insulation Removal and Disposal as ACM.

1. Description: Roof Drain Insulation Removal and Disposal as ACM.

2. Unit of Measurement: Per roof drain.

G. Unit Price No. 7: Glove Bag Removal and Disposal as ACM.

1. Description: Glove Bag Removal and Disposal as ACM.

2. Unit of Measurement: Per bag.

H. Unit Price No. 8: Pipe and Pipe Fitting Insulation Removal and Disposal as ACM.

1. Description: Pipe and Pipe Fitting Insulation Removal and Disposal as ACM.

2. Unit of Measurement: Per linear foot.

I. Unit Price No. 9: Black Tars/Mastics/Damp-proofing Materials Removal and Disposal as ACM

1. Description: Black Tars/Mastics/Damp-proofing Materials (including contaminated substrates – interior and exterior – behind walls, around windows/doors, etc.) Removal and Disposal as ACM.

2. Unit of Measurement: Per square foot.

J. Unit Price No. 10: Window/Door Caulking/Glazing Compound Removal and Disposal as ACM.

1. Description: Window/Door Caulking/Glazing Compound (including substrates) Removal and Disposal as ACM.

2. Unit of Measurement: Per linear foot.

K. Unit Price No. 11: Window/Door Caulking/Glazing Compound Removal and Disposal as PCBs.

1. Description: Window/Door Caulking/Glazing Compound (including substrates) Removal and Disposal as PCBs greater than 50 ppm.

2. Unit of Measurement: Per linear foot.

L. Unit Price No. 12: Window/Door Caulking/Glazing Compound Removal and Disposal as ACM and PCBs.

1. Description: Window/Door Caulking/Glazing Compound (including substrates) Removal and Disposal as ACM and PCBs greater than 50 ppm.

2. Unit of Measurement: Per linear foot.

M. Unit Price No. 13: 40 Yard Dumpster for ACM.

1. Description: 40 Yard Dumpster for ACM.

2. Unit of Measurement: Per dumpster.

N. Unit Price No. 14: 40 Yard Dumpster for PCB Containing Materials.

1. Description: 40 Yard Dumpster for PCB Containing Materials >50 PPM EPA Bulk Product Waste.

2. Unit of Measurement: Per dumpster.

O. Unit Price No. 15: 40 Yard Dumpster for ACM and PCB Containing Material.

1. Description: 40 Yard Dumpster for ACM and PCB Containing Materials >50 PPM EPA Bulk Product Waste.

2. Unit of Measurement: Per dumpster.

P. Unit Price No. 16: Sandblasting Paint and Disposal of as Hazardous Lead Waste.

1. Description: Sandblasting Paint and Disposal of as Hazardous Lead Waste.

2. Unit of Measurement: Per square foot.

Q. Unit Price No. 16: Sandblasting Paint and Disposal of as PCB Remediation Waste.

1. Description: Sandblasting Paint and Disposal of as PCB Remediation Waste

2. Unit of Measurement: Per square foot.

END OF SECTION

SECTION 01-2300

ALTERNATES

PART 1 – GENERAL

1.01 RELATED DOCUMENTS

A. Drawings and general provisions of the Contract, including General and Supplementary Conditions and other Division 01 Specification Sections, apply to this Section.

1.02 SUMMARY

A. Section includes administrative and procedural requirements for alternates.

1.03 DEFINITIONS

A. Alternate: An amount proposed by bidders and stated on the Bid Form for certain work defined in the bidding requirements that may be added to or deducted from the base bid amount if Owner decides to accept a corresponding change either in the amount of construction to be completed or in the products, materials, equipment, systems, or installation methods described in the Contract Documents.

1. Alternates described in this Section are part of the Work only if enumerated in the Agreement.

2. The cost or credit for each alternate is the addition to or deduction from the Contract Sum to incorporate alternate into the Work. No other adjustments are made to the Contract Sum and Contract Time.

1.04 PROCEDURES

A. Coordination: Revise or adjust affected adjacent work as necessary to completely integrate work of the alternate into Project.

1. Include as part of each alternate, miscellaneous devices, accessory objects, and similar items incidental to or required for a complete installation whether or not indicated as part of alternate.

B. Notification: Immediately following award of the Contract, notify each party involved, in writing, of the status of each alternate. Indicate if alternates have been accepted, rejected, or deferred for later consideration. Include a complete description of negotiated revisions to alternates.

C. Execute accepted alternates under the same conditions as other work of the Contract.

D. Schedule: A schedule of alternates is included at the end of this Section. Specification Sections referenced in schedule contain requirements for materials necessary to achieve the work described under each alternate.

E. Alternates shall be valid for the life of the contract. Alternates not selected at the time of award, but not identified as rejected may be selected within the time frame identified by the Contractor through the construction schedule where the selection will not impact the critical path and overall substantial completion of the contract. Should the Owner wish to exercise executing an Alternate after the last date reflected within the CPM Construction schedule for selection of an Alternate, the Alternate(s) may be negotiated as applicable, in accordance with the requirements associated with a Proposed Change Order.

PART 2 – PRODUCTS (NOT USED)

PART 3 – EXECUTION

3.01 SCHEDULE OF ALTERNATES

A. Alternate No. 1: Stair Low Sloped Roofs

1. Base Bid: Remove and replace metal roof edge flashing at the stair penthouse roof and provide EPDM membrane flashing to integrate edge metal with the existing roof as indicated on Sheet AE3.1 and as specified in Division 07 6000.

2. Alternate: Remove existing single-ply membrane roof, insulation, adhered vapor barrier, and metal flashings, and provide new vapor retarder, insulation, cover board, adhered PVC membrane, and membrane and metal flashings at the stair penthouse roof and low stair tower roofs as indicated on Sheet AE3.1 and as specified in Division 07 5000.

B. Alternate No. 2 Asphalt Shingle Roof Replacement

1. Base Bid: Remove bottom 5 ft. of the asphalt shingles and membrane underlayment on the Lecture Hall roof and provide new self-adhered membrane underlayment and asphalt singles to match existing as indicated on Sheet AE1.0 and as specified in Division 07 3100.

2. Alternate: Remove the asphalt shingles and membrane underlayment on the entire Lecture Hall roof and provide self-adhered membrane underlayment, felt underlayment, and asphalt shingles to match existing as indicated on Sheet AE1.0 and as specified in Division 07 3100.

END OF SECTION

SECTION 01-2500

SUBSTITUTION PROCEDURES

PART 1 – GENERAL

1.01 RELATED DOCUMENTS

A. Drawings and general provisions of the Contract, including General and Supplementary Conditions and other Division 01 Specification Sections, apply to this Section.

1.02 SUMMARY

A. Section includes administrative and procedural requirements for substitutions.

B. Related Requirements:

1. Division 01 Section "Allowances" for products selected under an allowance.

2. Division 01 Section "Alternates" for products selected under an alternate.

3. Division 01 Section "Product Requirements" for requirements for submitting comparable product submittals for products by listed manufacturers.

4. Divisions 02 through 33 Sections for specific requirements and limitations for substitutions.

1.03 DEFINITIONS

A. Substitutions: Changes in products, materials, equipment, and methods of construction from those required by the Contract Documents.

1. Substitutions for Cause: Changes proposed by Contractor that are required due to changed Project conditions, such as unavailability of product, regulatory changes, or unavailability of required warranty terms.

2. Substitutions for Convenience: Changes proposed by Contractor that are not required in order to meet other Project requirements but may offer advantages to Contractor or Owner.

1.04 ACTION SUBMITTALS

A. Substitution Requests: Submit three copies of each request for consideration. Identify product or fabrication or installation method to be replaced. Include Specification Section number and title and Drawing numbers and titles.

1. Substitution Request Form: Use CSI Form 13.1A or similar.

2. Documentation: Show compliance with requirements for substitutions and the following, as applicable:

   a. Statement indicating why specified product or fabrication or installation cannot be provided, if applicable. Provide documentation that supports such submission

   b. Coordination information, including a list of changes or revisions needed to other parts of the Work and to construction performed by Owner and separate contractors that will be necessary to accommodate proposed substitution.

   c. Detailed comparison of significant qualities of proposed substitution with those of the Work specified. Include annotated copy of applicable Specification Section. Significant qualities may include attributes such as performance, weight, size, durability, visual effect, sustainable design characteristics, warranties, and specific features and requirements indicated. Indicate deviations, if any, from the Work specified.

   d. Product Data, including drawings and descriptions of products and fabrication and installation procedures.

   e. Samples, where applicable or requested.

   f. Certificates and qualification data, where applicable or requested.

   g. List of similar installations for completed projects with project name and contact names, current phone numbers and addresses of architects and owners who were directly involved with accepting the product substitution.

   h. Material test reports from a qualified testing agency indicating and interpreting test results for compliance with requirements indicated.

   i. Safety Data Sheet that demonstrates that the product does not contain any hazardous material as defined in Section 01-7839 Project Record Documents.

   j. Detailed comparison of Contractor's construction schedule using proposed substitution with products specified for the Work, including effect on the overall Contract Time. If specified product or method of construction cannot be provided within the Contract Time, include letter from manufacturer, on manufacturer's letterhead, stating date of receipt of purchase order, lack of availability, or delays in delivery.

   k. Savings to the Owner, including a proposal of change, if any, in the Contract Sum.

   l. Contractor's certification that proposed substitution complies with requirements in the Contract Documents except as indicated in

substitution request, is compatible with related materials, and is appropriate for applications indicated.

m. Contractor's waiver of rights to additional payment or time that may subsequently become necessary because of failure of proposed substitution to produce indicated results.

3. Architect/Engineer's Action: If necessary, Architect/Engineer will request additional information or documentation for evaluation within seven (7) days of receipt of a request for substitution. Architect/Engineer will notify the Owner of their recommendation to accept or reject the submission. Upon Owner decision, Architect/Engineer will notify Contractor of acceptance or rejection of proposed substitution within seven (7) days of receipt of request, or seven (7) days of receipt of additional information or documentation, whichever is later.

a. Forms of Acceptance: Executed substitution form and/or a Change Order.

b. Use product specified if Architect/Engineer does not issue a decision on use of a proposed substitution within time allocated.

1.05 QUALITY ASSURANCE

A. Compatibility of Substitutions: Investigate and document compatibility of proposed substitution with related products and materials. If applicable, engage a qualified testing agency to perform compatibility tests recommended by manufacturers.

1.06 PROCEDURES

A. Coordination: Revise or adjust affected work as necessary to integrate work of the approved substitutions.

B. Architect/Engineer shall review the request for substitution in accordance with the conditions and requirements stated within. Once a determination has been made by the Architect/Engineer, the Architect/Engineer will summarize the request and provide their findings and recommendations in writing to the Owner. The Owner will review and make the final determination of acceptance of the substitution. Such acceptance must be obtained in writing from the Owner. Provide the summary findings and Owner acceptance of the substitution with the change management document if applicable.

PART 2 – PRODUCTS

2.01 SUBSTITUTIONS

A. Substitutions for Cause: Submit requests for substitution immediately on discovery of need for change, but not later than Thirty (30) days prior to time required for preparation and review of related submittals.

1. Conditions: Architect/Engineer and Owner will consider Contractor's request for substitution when the following conditions are satisfied. If the following conditions are not satisfied, Architect/Engineer will return requests without action, except to record noncompliance with any of these requirements:

   a. Requested substitution is consistent with the Contract Documents and will produce indicated results.

   b. Requested substitution provides sustainable design characteristics that specified product provided.

   c. Requested substitution is fully documented and properly submitted.

   d. Requested substitution does not contain any hazardous material.

   e. Requested substitution will not adversely affect Contractor's construction schedule.

   f. Requested substitution has received necessary approvals of authorities having jurisdiction.

   g. Requested substitution is fully compatible with other portions of the Work.

   h. Requested substitution has been coordinated with other portions of the Work.

   i. Requested substitution provides specified warranty.

   j. If requested substitution involves more than one contractor, requested substitution has been coordinated with other portions of the Work, is uniform and consistent, is compatible with other products, and is acceptable to all contractors involved.

   k. Requested substitution does not require additional design changes to be performed by the Architect/Engineer in order to incorporate the substitution into the work.

   l. Request for substitution shall not be based on failure to adequately plan the review of a product submittal, obtain approval of the product submittal, properly schedule, and receive delivery of the specified product in sufficient time to install within the construction contract time without impacting other tasks. The Contractor is responsible for any costs associated in expediting delivery or upcharges to changes in product in order to maintain adherence to the construction schedule as defined in the contract documents.

B. Substitutions for Convenience: Such request shall be submitted by the Contractor ten (10) days prior to contract execution. Should an approval of any substitutions for convenience be submitted for consideration after contract execution, it shall be at the sole discretion of the Owner. If the substitution is not accepted the Contractor

remains obligated to supply the originally specified product at no additional cost to the Owner. If the substitution is accepted all coordination and liability is the sole responsibility of the Contractor. Contractor shall follow all requirements as outlined for Substitution for Cause.

a. Requested substitution is a gross credit to the Owner.

b. Requested substitution does not require more than one submission.

PART 3 – EXECUTION (NOT USED)

END OF SECTION

SECTION 01-2600

CONTRACT MODIFICATION PROCEDURES

PART 1 – GENERAL

1.01 RELATED DOCUMENTS

A. Drawings and general provisions of the Contract, including General and Supplementary Conditions and other Division 01 Specification Sections, apply to this Section.

1.02 SUMMARY

A. Section includes administrative and procedural requirements for handling and processing Contract modifications.

B. Related Requirements:

1. Division 01 Section "Substitution Procedures" for administrative procedures for handling requests for substitutions made after the Contract award.

1.03 MINOR CHANGES IN THE WORK

A. Architect/Engineer will issue supplemental instructions authorizing minor changes in the Work, not involving adjustment to the Contract Sum or the Contract Time, on AIA Document G710, "Architect's Supplemental Instructions" (ASI). The Contractor shall proceed with minor changes in the work shown on ASI's.

1.04 AE PROPOSAL REQUESTS OR BULLETINS

A. Initiated Proposal Requests: Architect/Engineer or Owner will issue a detailed description of proposed changes in the Work that may require adjustment to the Contract Sum or the Contract Time. If necessary, the description will include supplemental or revised Drawings and Specifications.

B. Proposal Requests (PR) or Bulletins issued by the Architect or Engineer are not instructions either to stop work in progress or to execute the proposed change. The Contractor shall only proceed with the change work when a CCD or CO is counter-executed by the Owner.

1.05 ADMINISTRATION OF CHANGES IN THE WORK

A. Changes to the work shall be submitted in accordance with all contract document requirements.

1. Section 4b-24 of the Connecticut General Statutes, the public auditors of the State of Connecticut and the auditors or accountants of the Owner shall have

the right to audit and make copies of the books of the Contractor employed by the Owner.

2. All changes in the Work shall be subject to the written approval of the Owner. A change in the Contract Sum or the Contract Time shall be accomplished only by formal written change order signed by both parties. Accordingly, no course of conduct or dealings between the parties, nor express or implied acceptance of alterations or additions to the Work, and no claim that the Owner has been unjustly enriched by any alterations or

   additions to the Work, whether or not there is, in fact, any unjust enrichment shall be the basis for any claim for an increase in any amounts due or a change in any time period extension owed under the contract documents.

B. Labor Rates:

1. Utilize the Owner's Labor Rate Sheet template which can be obtained through the Owner's website (http://updc.uconn.edu). No other format shall be utilized. Previously agreed upon labor rates shall not be utilized in establishment of labor rates for this project.

2. Prior to the submission of the first application for payment or within 21 days from the contract start date whichever comes first, the Contractor will obtain from their subcontractor's labor rates for all their self-performed trade labor work for review in the format provided by the Owner. The labor rates shall be inclusive of benefits, applicable taxes and worker compensation insurance. When calculating labor rates, rates shall not include those general and administrative overhead costs and profit. Labor rates shall be valid for the life of the project; no rate adjustment shall be allowed for any increases that occur with prevailing wage or union agreements while under this contract.

3. All labor rates are subject to thorough analysis and possible adjustment prior to their acceptance by the Owner. Analysis review shall include but not be limited to:

   a. Labor Rates submitted are only for the Contractor identified on the rate sheet for review and approval. Rates are for the identified Contractor's self-performed trade labor work.

   b. Compliance with prevailing wage

   c. State and Federal wage taxes

   d. Contractors current worker's compensation premium statement that includes modification ratings

   e. Consideration of current union wage package.

   f. Payroll of employees (non-owner/family member) if deemed necessary to confirm base wage and fringe of proposed trade labor category. Reasonable wage rate shall be based on a rate equal to

the customary or prevailing for the same work in the same trade or occupation in the town in which such project is being constructed. Customary rate shall mean a labor rate no more than the standard journeyman, apprentice or foreman rate as established by the trade union agreement for the work and the location of the project.

g. Labor rates cannot be interchangeable from Contractor to subcontractor or from subcontractor to subcontractor.

h. Approved labor rates shall not be transferable from project to project or contract to contract.

i. Labor rates shall not include those items as considered part of overhead and profit outlined within the General Conditions of the contract documents or union agreement costs outside of the defined wage package of base wage and fringe above the line.

j. Failure to submit and receive approval of each sub and sub-tier worker's classification labor rates prior to work performed and payment made is at the Contractor's risk. Such value paid will not impact the review and acceptance process.

C. Labor Representation: (Contractor's or Subcontractor's own self performed forces)

1. No Proposed Change Order shall be negotiated if the request is solely for the increased labor rate over those originally carried by the Contractor in its original bid.

2. Additional Foreman hours shall not be included unless additional crews are added. Additional Superintendent hours shall not be included unless a compensable time extension is granted. Project Executive and Project Manager time shall not be included as a direct cost as it is part of the overhead mark-up allowed.

3. Labor efforts shall be on the direct time performing the work, regardless of any union conditions. If a worker performs work under one particular trade category and then switches to perform work under another trade category in one work day, such work shall be represented as the worker's direct time performing each of the trade categories for that work day.

4. Overtime, increased manpower, and additional shifts:

a. The Contractor shall take necessary steps to maintain project schedule.

b. If the Contractor is not behind Schedule and the Owner requests an acceleration of the work, the Owner will pay the Contractor the actual additional premium portion of the wages for overtime or additional shift work not included in the Contract price.

c. If the Contractor, through its sole or partial fault or neglect is behind Schedule, the Contractor shall at its own expense, increase its manpower or to work any overtime or additional shifts or take other action necessary to expedite the Work to meet the Project Schedule.

D. Equipment Rates: Prior to the first application for payment, the Contractor shall submit for review and approval by the Owner an hourly, weekly and monthly rate for each self-owned piece of equipment. Such rates shall not exceed the rate reflected in Equipment Watch. The list of equipment shall provide the following information:

1. Type of Equipment

2. Year

3. Make

4. Model

5. Size / Capacity

6. Registration #

E. Proposed Cost: The Owner may rely on supporting documentation provided by the Contractor and/or Subcontractor in agreeing to a cost for the change. If the Owner believes that additional information is necessary to substantiate the accuracy of the cost, the Owner reserves the right to request and receive additional information from the Contractor. The proposed cost must be based upon those identified in support of a Proposed Change Order.

1. Proposed cost estimated by the Contractor on behalf of the subcontractor shall be prohibited.

2. General Conditions / General Requirements shall be calculated on the actual cost impact to the critical path schedule. If the time extension does not extend beyond the month identified within the contract documents, only on-site field labor costs shall be allowed.

F. Construction Change Directive (CCD): Where the lack of timely authorization would impact the critical path schedule of the work or where the entitlement to additional cost is not clear or is not in total agreement by the parties, the Owner may issue a Construction Change Directive on a modified AIA Document G714 form. The Contractor shall immediately proceed with the change in the Work as indicated and directed in the CCD. Issuance of a CCD to the Contractor shall also be considered an issuance of the directive to the subcontractor(s) to proceed with the work.

1. Contents: The CCD will contain a complete description of the change in the Work. It will also designate the method to be followed to determine the adjustment in the Contract Sum and/or the Contract Time, if any. The Contractor may be requested to provide an order of magnitude (not to exceed) cost estimate for the change in the work. However, an executed CCD shall not be the sole backup to a Proposed Change Order (PCO) nor

shall the execution of a CCD as a “Lump Sum” be considered binding as such when transposing into a change order.

2. Documentation: Contractor’s order of magnitude estimate of the work on Contractor letterhead or email reflecting at a minimum the following:

   a. Breakdown of how the cost estimate was established

   b. Inclusive of all work effort associated with the change. Inclusive of applicable supervision and any estimated extension of time.

3. Execution: If issued as a Time and Materials and/or Not to Exceed, the documentation and monitoring of the work shall be reflected on daily “Additional Work Tickets” received from subcontractors and/or documented by the Contractor and consists at a minimum, the following:

   a. Filling out of daily additional work tickets documenting the additional work performed from beginning to completion of the work.

   b. The date of the day the work is performed.

   c. Project Name

   d. Contracting Firm’s name.

   e. Person’s full name clearly printed who is monitoring and tracking the work being performed.

   f. Name of the company performing the work and what work is being performed.

   g. Number of workers, by trade labor category.

   h. Number of hours worked by each worker.

   i. Signature of the person monitoring the work certifying that the information contained on the Daily Additional Work Tickets is true and accurate. An additional signature by the Owner verifying the work performed on the ticket is preferred.

   j. Owner reserves the right to not rely on or accept information represented on the daily additional work tickets if Owner did not verify the tickets.

G. Proposed Change Orders (PCO): Contractor shall utilize the most current Owner PCO and Labor Rate Sheet templates which can be obtained through the Owner’s website (http://updc.uconn.edu). No other format shall be utilized.

   1. Submit to the Architect/Engineer and Owner a complete itemized PCO within seven (7) working days from the date reflected on the Proposal Request or when response to an RFI has been received. If the PCO and backup is

incomplete the Architect/Engineer will notify the Contractor within seven (7) days to revise and resubmit. Contractor is to identify revisions to the submitted PCO document by enumerating as the PCO number -R1, -R2, R3 etc. and date of the revision being submitted.

H. If a Proposal Request was not issued for the change, submit a PCO within seven (7) days from the date the initial discovery for change was formally documented.

1. Include within the PCO template a list of quantities of labor and/or products required or eliminated and/or pre-approved unit costs, with total amount of purchases and credits that encompass the changes identified and affected by the proposal request. If requested, furnish survey data to substantiate quantities.

2. Forms must be drafted and signed by the authorized agent of the Contractor or their subcontractor represented on the PCO. Contractor shall not formulate, calculate or submit proposed costs for a change on behalf of the sub-tier subcontractors and suppliers. All sub-tier contractors and suppliers shall submit their costs on supporting company letterhead in the format outlined within.

3. Electronic signatures from the submitting Company and its Representative identified on the PCO form is preferred. Failure of the Contractor or Subcontractor to sign the form, shall not relieve the Contractor of their obligations to represent true net costs for the change. Information misrepresented knowingly or unknowingly to receive financial gain, shall be a breach of their obligations to perform nor allow for a claim under the contract.

4. Failure of the Contractor to timely submit complete itemized PCO's, such failure shall not relieve the Contractor of their obligations to perform nor to allow for a claim under the contract.

5. Markup shall be calculated with combined overhead and profit in a single percentage as identified as allowed within the General Conditions of the contract for both the Prime Contractor and Sub-tier Contractors.

6. Changing the distribution of the percentage of allowed markups identified within the contract shall be prohibited.

I. The basis for each PCO shall be identified and a copy of the following shall be provided:

1. Entitlement

a. On the format required by the Owner, summarize and describe the need for the change and the basis of the entitlement for an increase and/or extension to the contract sum or contract time;

b. Identify all pertinent project information, sequential tracking, and original issue date and revision dates (if any)*;*

c. Classification of the PCO as being predominately due to Unforeseen Field Conditions or the actions or requests of the Contractor, the Owner or AE Firm; and

d. List the proposed change value for each effected Prime Subcontractor and lower tier Subcontractor(s).

2. Supporting Documentation for Entitlement

3. Include a copy of the document that initiated the PCO, which may include one or more of the following:

a. A copy of an executed Proposal Request (PR) from the AE Firm or Owner with all attachments;

b. A copy of a Bulletin from the Architect or Engineer of Record;

c. A copy of a Sketch(s) issued by the AE Firm clearly outlining the change;

d. A copy of an inspection report or notes by an official having jurisdiction's that identifies a directive for a change;

e. A copy of any pertinent Field Directives, RFI's, e-mails or other correspondence regarding the change, if applicable; and

f. A copy of the executed CCD form, (where applicable).

g. Where a request for an extensions of time is included, a copy of the CPM project schedule reflecting the direct impact to the critical path and any other documents required by the Owner shall be provided.

4. Supporting Documentation for Costs

a. Include a list of quantities of products required or eliminated and unit costs, with total amount of purchases and credits to be made. If requested, furnish survey data to substantiate quantities.

b. Copies of all supporting quotes from the material suppliers and sub tier work (detailed below). The PCO supporting documentation should identify the companies submitting the information and the individuals who prepared the quotations.

c. Calculate the labor required to complete the work utilizing the contractually approved hourly rates of the submitting Contractor and their subcontractor's self-performed trade labor category as established in the contract. Where there are not preapproved labor rates for the Contractor or subcontractor's self-performed trade labor

category of work, submit labor rates in the format required by the Owner for review and approval.

(1) Hourly labor rates shall not include Overhead and Profit (O&P), small tools, or any other general conditions costs as identified in the contract under Sec. 7.2.2.8 of the AIA 201 between the Owner and Contractor.

(a) Note that the definition of “small tools” includes equipment utilized in the normal course of work including items such as shovels, picks, rakes, ladders, and power tools which are expected to be utilized on a project. Trade related equipment, hand tools, and power tools normally supplied with the labor or that are normally expected to be owned in the performance of the typical work for a trade are not compensable. These costs shall not be approved as part of the Direct Cost of a Change Order as they are included in the Contractor’s overhead mark-up percentage.

(b) Additional Supervisory or Foreman hours shall not be included in the cost calculation for the change unless additional crews are necessary and added and/or a compensable time extension is granted.

(c) General, Area or Lead Foreman and Project Management support is considered as part of overhead and profit.

(d) Labor Rates shall not be limited to trade labor categories as defined within the prevailing wage schedule applicable to the project. Include labor costs for offsite sheet metal fabrication, air balancing, engineering and programming services in support of the project,

(e) Approved Labor Rates are for the life of the contract term and therefore not adjustable unless the contract completion date is extended beyond the month of June within the year the contract was to be completed. Adjustment to pre-approved labor rates shall only be considered for change order work issued after receipt of Final Completion.

(f) Forms must be drafted and signed by the authorized agent of the Contractor or subcontractor who is self-performing the trade work represented on the labor rate sheet. Contractor shall not misrepresent proposed labor rates from the sub-tier contractors.

d. Provide a detailed and itemized break-down of all anticipated material and equipment costs, with the unit cost per item multiplied by the number of units. Additional documentation is required as follows:

(1) Supporting quote from a material supplier reflecting the units and unit cost(s) for each item type;

(2) Supporting quote from the equipment supplier, with the hourly rental rate multiplied by the number of hours. One of the following shall be submitted in support of the equipment costs:

(a) When equipment is rented from a third-party, supporting rental quote from the supplier reflecting daily/weekly/monthly equipment costs (whichever applies) for equipment.

(b) When equipment is owned and used directly on the change work by the Contractor or subcontractor, the daily rate shall not exceed the rate calculated by taking the monthly rental rate as identified by a nationally recognized construction cost estimating guide or service and divided by 20 days. The weekly or monthly rate (respectively) shall not exceed the weekly/monthly rate calculated by a nationally recognized construction cost estimating guide or service. Year, make and model of the equipment must be provided and used as the basis for establishing the rental rate.

e. If the PCO is made on a “unit cost” basis as part of the established contract, provide a copy of approved unit costs reflected in the contract, or if the unit cost was not identified in the contract, provide a complete breakdown of how the unit cost was arrived at with supporting documentation as prescribed above.

f. If the work was previously performed based on issuance of a CCD on a Time & Material and/or Not to Exceed basis, provide:

(1) Daily Additional Work Tickets as outlined above.

(2) Actual material and rental supplier invoicing.

(3) Subcontractor billings with actual material and rental supplier invoicing.

g. To the extent that work is subcontracted to Lower Tier Subcontractors, anticipated labor, materials and equipment of sub-subcontractor costs shall be substantiated and consistent with the guidelines prescribed above.

h. Costs calculated and represented are not to be rounded up or down.

5. Supporting Documentation for Time Extension

a. If the change is believed to impact the current critical path of construction, the Contractor must demonstrate the impact via the current critical path construction schedule of the project.

b. The current critical path schedule shall show all early and late starts, all early and late completions to disclose any residual float.

c. The change must clearly show the impact associated to the critical path of construction, where resequencing of activities does not provide work to be performed concurrently.

d. Failure to maintain the project's critical path construction schedule, shall not relieve the Contractor of demonstrating true impact of the change.

e. Also refer to the General Conditions of the contract document for further conditions associated with a request for time extension.

J. Allowance Adjustment: See Division 01 Section "Allowances" for administrative procedures for preparation of Change Order Proposal for adjusting the Contract Sum to reflect actual costs of allowances.

K. Unit-Price Adjustment: See Division 01 Section "Unit Prices" for administrative procedures for preparation of Change Order Proposal for adjusting the Contract Sum to reflect measured scope of unit-price work as recognized within the contract.

1.06 CHANGE ORDER PROCEDURES

A. On Owner's acceptance of the information contained in a Proposed Change Order, Architect/Engineer will issue a Change Order for signatures of Owner, Architect and Contractor on AIA Document G701.

1. Follow requirements for PCO's as outlined above.

2. Each Change Order shall list and reflect the following:

a. Each PCO # included within the change order;

b. Each CCD# (when applicable to an identified PCO);

c. Brief description of the work included within the PCO;

d. Dollar value of the PCO

e. Total of all PCO's represented

f. Date of contractual Substantial Completion

g. Extensions of time being granted (if any) and the new date of Substantial Completion.

3. Contractor's failure to submit PCO's or complete CO's within the time frame outlined in the contract documents and/or failure to comply with the adherence of all portions of the change management requirements and/or Contractor's payment to a Prime or Sub-tier Subcontractor prior to submitting and/or receiving formal approval of a Change Order shall not be grounds for acceptance or commitment of represented costs. Change costs shall be reviewed and accepted as outlined.

PART 2 – PRODUCTS (NOT USED)

PART 3 – EXECUTION (NOT USED)

END OF SECTION

SECTION 01-3100

PROJECT MANAGEMENT AND COORDINATION

PART 1 – GENERAL

1.01 RELATED DOCUMENTS

A. Drawings and general provisions of the Contract, including General and Supplementary Conditions and other Division 01 Specification Sections, apply to this Section.

1.02 SUMMARY

A. Section includes administrative provisions for coordinating construction operations on Project including, but not limited to, the following:

1. Informational Submittals
2. General coordination procedures.
3. Coordination drawings.
4. Requests for Information (RFIs).
5. Project Meetings.
    a. Pre-construction conference
    b. Pre-installation conference
    c. Progress meetings
    d. Coordination meetings
    e. Landscape Status Updates
6. General Administration

B. Each contractor shall participate in coordination requirements. Certain areas of responsibility are assigned to a specific contractor.

C. Related Requirements:

1. Division 01 Section "Construction Progress Documentation" for preparing and submitting Contractor's CPM construction schedule.
2. Division 01 Section "Execution" for procedures for coordinating general installation and field-engineering services, including establishment of benchmarks and control points.

3. Division 01 Section "Closeout Procedures" for coordinating closeout of the Contract.

1.03 DEFINITIONS

A. RFI: Request from Owner or Contractor seeking information required by or clarifications of the Contract Documents.

1.04 INFORMATIONAL SUBMITTALS

A. Key Personnel: Provide at the pre-construction meeting a list of key personnel assignments, including project manager, superintendent, safety engineer and other personnel in attendance at Project site. Identify individuals and their duties and responsibilities; list business addresses and telephone numbers, including office, and cellular telephone numbers and e-mail addresses. Provide names, addresses, and telephone numbers of individuals assigned as alternates in the absence of individuals assigned to Project.

1. Keep list current and available at all times.

2. The Owner requires as a minimum, the following Key Personnel be assigned to this project. Each position shall be with an individual knowledgeable in the work that they will be providing under this contract and who is employed full-time under the Contractor, dedicated to the position listed.

a. Project Manager (on site a minimum of once a week for duration of the project through closeout)

b. Project Superintendent (on-site full time for duration of the project through closeout)

c. Safety Engineer shall be responsible for all work safety on the site throughout the duration of the work. The Contractor has sole responsibility for maintaining a safe and secure work site, how they achieve the security and safety of the workers and property is at their discretion. However, at a minimum the Owner expects the Safety Engineer to visit the site once a week and during high risk activities and at intervals as identified in the contract documents. Safety Engineer shall document his/her visits and reflect any issues or findings within such report. Reports shall be available within 24 hours of the inspection. Project Engineer (Project specific)

3. Each individual listed above shall have not less than five (5) years' experience performing work of a similar nature to this project and in a comparable position to the position assigned on this project. Resumes will be required on all key personnel prior to acceptance by the Owner. Any Contractor personnel denoted as Key Personnel that were previously accepted by the Owner, shall not be removed from the project without Owner's prior approval.

4. Each individual listed or identified at a later date shall have a background check performed as outlined in the University's Contractor Background Checks Policy that can be viewed at the following weblink: http://updc.uconn.edu.

B. Contractor's Background Screenings: Provide at the pre-construction meeting the Contractor's Background Screening Control Plan on how the Background Screenings will be performed and how the workers will be tracked to ensure that Background screenings are to be performed and reviewed prior to allowing any worker to access the project site. See Section 01 3300 Submittal Procedures and Section 01 5000 Project Management and Coordination for additional requirements on Contractor background screening.

1. A summary report of background screenings on each individual performing any type of work on the project that will be coming to the project site for any length of time. This excludes delivery and teamster trucking only.

C. Subcontract Information: Using the Owner's template format, prepare a schedule identifying individuals or firms contracted for each portion of the Work, including those who are to furnish products or equipment fabricated to a special design.

D. See section on submittals for more required submittals for approval.

1.05 GENERAL COORDINATION PROCEDURES

A. Permits: The Owner shall provide the initial building permit for the project. The local Public Safety shall have jurisdiction with non-threshold buildings, for inspection work. However, in cases where a building is a threshold building or is being demolished, the Contractor is responsible for coordinating, obtaining and paying for required permits.

B. Coordination: Coordinate construction operations included in different Sections of the Specifications to ensure efficient and orderly installation of each part of the Work. Coordinate construction operations, included in different Sections that depend on each other for proper installation, connection, and operation.

1. Schedule construction operations in sequence required to obtain the best results where installation of one part of the Work depends on installation of other components, before or after its own installation.

2. At a minimum, weekly inspections of project by the safety officer are required. Safety inspector reports shall be made available at the Owner's request within 24 hours.

3. Inspections of the project by the official(s) having jurisdiction at intervals required by the respective general permit requirements. Regardless as to who applied for a permit, the Contractor is responsible to comply and perform all requirements associated with any permit issued against the Project.

a. http://publicsafety.uconn.edu/fmbio/

b. Operating permit

c. Health and Safety permit

d. Environmental permit(s)

4. The Contractor is responsible to abide by the terms of all Environmental Permit requirements including but not limited to:

a. Flood Management Permit (when applicable)

b. Construction Stormwater General Permit (when applicable)

c. Inland Wetlands and Water Resource Permit (when applicable)

(1) Turbidity testing and reporting

d. New Source Review permit (when applicable)

e. Waste Water Discharge permit (when applicable)

f. Environmental Title V Air permit (when applicable)

5. Coordinate installation of different components to ensure maximum performance and accessibility for required maintenance, service, and repair.

6. Coordinate demolition of different components to ensure maximum performance and safety.

a. Upon immediate demolition, cap the ends of the pipes to contain the off gases coming from within the pipe to eliminate potential false gas leak reports and ensure safety to other areas not being impacted.

7. Make adequate provisions to accommodate items scheduled for later installation.

C. Where necessary, prepare memoranda for distribution to each party involved, outlining special procedures required for coordination. Include such items as required notices, reports, and list of attendees at meetings.

1. Prepare similar memoranda for Owner and separate contractors if coordination of their Work is required.

D. Administrative Procedures: Coordinate scheduling and timing of required administrative procedures with other construction activities to avoid conflicts and to ensure orderly progress of the Work. Such administrative activities required by the Contractor include, but are not limited to, the following:

1. Submission of Contractor's CPM construction schedule

2. Preparation of the schedule of values

3. Approval of required submittals

4. Purchase of equipment and material, long lead items

5. Installation and removal of temporary facilities and controls

6. Listing, delivery and processing of submittals.

7. Documentation, circulation and acceptance of all Project meetings

8. Documentation, circulation and acceptance of all Progress meetings

9. Project closeout activities

10. Startup and adjustment of systems

E. Conservation: Coordinate construction activities to ensure that operations are carried out with consideration given to conservation of energy, water, and materials. Coordinate use of temporary utilities to minimize waste.

1. Salvage materials and equipment involved in performance of, but not actually incorporated into, the Work. See other Sections for disposition of salvaged materials that are designated as Owner's property.

1.06 COORDINATION DRAWINGS

A. Coordination Drawings, General: **PRIOR TO START OF WORK ACTIVITY:** Prepare coordination drawings according to requirements in individual Sections, and additionally where installation is not completely shown on Shop Drawings, where limited space availability necessitates coordination, or if coordination is required to facilitate integration of products and materials fabricated or installed by more than one entity.

1. Content: Project-specific information, drawn accurately to a scale large enough to indicate and resolve conflicts. Do not base coordination drawings on standard printed data or Architects or Engineers electronic data. Include the following information, as applicable:

a. Use applicable Drawings as a basis for preparation of coordination drawings. Prepare sections, elevations, and details as needed to describe relationship of various systems and components.

b. Coordinate the addition of trade-specific information to the coordination drawings by multiple contractors in a sequence that best provides for coordination of the information and resolution of conflicts between installed components before submitting for review.

c. Indicate functional and spatial relationships of components of architectural, structural, civil, mechanical, and electrical systems.

d. Indicate space requirements for routine maintenance and for anticipated replacement of components during the life of the installation.

e. Show location and size of access doors required for access to concealed dampers, valves, and other controls.

f. Indicate required installation sequences.

g. Indicate dimensions shown on the Drawings. Specifically note dimensions that appear to be in conflict with submitted equipment and minimum clearance requirements. Provide alternate sketches to Architect/Engineer indicating proposed resolution of such conflicts. Minor dimension changes and difficult installations will not be considered changes to the Contract.

B. Coordination Drawing Organization: Organize coordination drawings as follows:

1. Floor Plans and Reflected Ceiling Plans: Show architectural and structural elements, and mechanical, plumbing, fire-protection, fire-alarm, and electrical Work. Show locations of visible ceiling-mounted devices relative to acoustical ceiling grid. Supplement plan drawings with section drawings where required to adequately represent the Work.

2. Plenum Space: Indicate sub-framing for support of ceiling and wall systems, mechanical and electrical equipment, and related Work. Locate components within ceiling plenum to accommodate layout of light fixtures indicated on Drawings. Indicate areas of conflict between light fixtures and other components.

3. Mechanical Rooms: Provide coordination drawings for mechanical rooms showing plans and elevations of mechanical, plumbing, fire-protection, fire-alarm, and electrical equipment.

4. Structural Penetrations: Indicate penetrations and openings required for all disciplines.

5. Slab Edge and Embedded Items: Indicate slab edge locations and sizes and locations of embedded items for metal fabrications, sleeves, anchor bolts, bearing plates, angles, door floor closers, slab depressions for floor finishes, curbs and housekeeping pads, and similar items.

6. Mechanical and Plumbing Work: Show the following:

a. Sizes and bottom elevations of ductwork, piping, and conduit runs, including insulation, bracing, flanges, and support systems.

b. Dimensions of major components, such as dampers, valves, diffusers, access doors, cleanouts and electrical distribution equipment.

c. Fire-rated enclosures around ductwork.

7. Electrical Work: Show the following:

   a. Runs of vertical and horizontal conduit 1-1/4 inches in diameter and larger.

   b. Light fixture, exit light, emergency battery pack, smoke detector, and other fire-alarm locations.

   c. Panel board, switch board, switchgear, transformer, busway, generator, and motor control center locations.

   d. Location of pull boxes and junction boxes, dimensioned from column center lines.

8. Fire-Protection System: Show the following:

   a. Locations of standpipes, mains piping, branch lines, pipe drops, and sprinkler heads.

9. Coordination Drawings Review: Architect/Engineer will review coordination drawings to confirm that the Work is being coordinated, but not for the details of the coordination, which are Contractor's responsibility. If Architect/Engineer determines that coordination drawings are not being prepared in sufficient scope or detail, or are otherwise deficient, Architect/Engineer will so inform Contractor, who shall make changes as directed and resubmit.

   a. Contractor shall not rely on the availability of BIM for use in Contractor’s coordination.

1.07 REQUESTS FOR INFORMATION (RFIS)

A. General: Immediately on discovery of the need for additional information or interpretation of the Contract Documents, Contractor shall prepare and submit an RFI in the form specified and sent directly to the Architect/Engineer.

   1. Architect/Engineer will return RFIs submitted to Architect/Engineer by other entities controlled by Contractor with no response.

   2. Coordinate and submit RFIs in a prompt manner so as to avoid delays in Contractor's work or work of subcontractors.

   3. Habitual submissions of RFI’s not having any serious purpose and/or having no sound basis and/or is consistently incomplete and/or is already answered within the Contract documents, the Contractor shall reimburse the Owner for the Architect/Engineer’s additional time reviewing and answering such RFIs.

B. Content of the RFI: Include a detailed, legible description of item needing information or interpretation and the following:

   1. Project name.

2. Project number.

3. Date.

4. Name of the Contractor.

5. Name of the person requesting clarification.

6. Name of Architect/Engineer.

7. Name of the person responding to the RFI.

8. RFI number, numbered sequentially.

9. RFI subject.

10. Specification Section number and title and related paragraphs, as appropriate.

11. Drawing number and detail references, as appropriate.

12. Field dimensions and conditions, as appropriate.

13. Contractor's suggested resolution. If Contractor's suggested resolution impacts the Contract Time or the Contract Sum, Contractor shall state impact in the RFI.

14. Contractor's signature.

15. Attachments: Include sketches, descriptions, measurements, photos, Product Data, Shop Drawings, coordination drawings, and other information necessary to fully describe items needing interpretation.

    a. Include dimensions, thicknesses, structural grid references, and details of affected materials, assemblies, and attachments on attached sketches.

C. RFI Forms: AIA Document G716 or similar and in a form acceptable to the Owner and Architect

1. Attachments shall be electronic files in Adobe Pro PDF format.

D. Architect/Engineer's Action: Architect/Engineer will review each RFI, determine action required, and respond. Allow seven (7) days for Architect's response for each RFI. RFIs received by Architect/Engineer after 3:00 p.m. will be considered as received the following working day.

1. The following Contractor-generated RFIs will be returned without action:

    a. Requests for approval of submittals.

b. Requests for approval of substitutions.

c. Requests for approval of Contractor's means and methods.

d. Requests for coordination information already indicated in the Contract Documents.

e. Requests for adjustments in the Contract Time or the Contract Sum.

f. Requests for interpretation of Architect/Engineer's actions on submittals.

g. Incomplete RFIs or inaccurately prepared RFIs.

2. Architect/Engineer's action may include a request for additional information, in which case Architect/Engineer's time for response will date from time of receipt of additional information.

3. Architect/Engineer's action on RFIs is not intended to change the Contract Time or the Contract Sum.

a. If Contractor believes the RFI response warrants change in the Contract Time or the Contract Sum, notify Architect/Engineer and Owner in writing within seven (7) days of receipt of the RFI response with a proposed order of magnitude cost.

E. RFI Log: Prepare, maintain, and submit a tabular log of RFIs organized by the RFI number. Submit log monthly or as directed in a format **acceptable to the Architect/Engineer and Owner**. Include the following:

1. Project name.

2. Name and address of Contractor.

3. Name and address of Architect/Engineer.

4. RFI number including RFIs that were returned without action or withdrawn.

5. RFI description.

6. Date the RFI was submitted.

7. Date Architect/Engineer's response was received.

F. On receipt of Architect/Engineer's action, update the RFI log and immediately distribute the RFI response to affected parties. Review response and notify Architect/Engineer within seven (7) days if Contractor disagrees with response.

1. Identification of related Minor Change in the Work.

2. Identification of related Field Order, Work Change Directive, and Proposal Request, as appropriate.

1.08 PROJECT MEETINGS

A. Preconstruction Conference: The successful bidder shall attend a preconstruction conference and organizational meeting at the Owner's Office of University Planning, Design, and Construction with the Owner prior to any field work to review responsibilities and personnel assignments and to insure that Specifications, drawings and all conditions are understood to properly complete this Contract.

1. The meeting will be scheduled by the Owner's Representative.

2. Attendees: The Owner, authorities having jurisdiction, Environmental Health and Safety Representative, Parking Services Representative, Environmental Compliance representative, Commissioning Agent, Architect/Engineer, and their consultants; Contractor and its superintendent; major subcontractors; suppliers; and other concerned parties may attend the conference. Participants at the conference shall be familiar with Project and authorized to conclude matters relating to the Work.

3. Agenda: Discuss items of significance that could affect progress, including but not limited to the following where applicable:

a. List of Submittals initially required, see 01 3300 submittal procedures.

(1) Review each to ensure that they have been submitted for review and acceptance.

b. Items for discussion or review not limited to:

(1) Contractor's CPM Construction schedule.

(2) Phasing.

(3) Logistics Plan review.

(4) Critical work sequencing and long-lead items.

(5) Labor Market Regulations.

(6) Designation of key personnel and their duties.

(7) Lines of communications and emergency phone numbers.

(8) Background Check Plan review, where applicable.

(9) Procedures for processing field decisions and potential Change Orders.

(10) Procedures for RFIs.

(11) Procedures for testing and inspecting.

(12) Procedures for processing Applications for Payment.

(13) Distribution of the Contract Documents and correspondence.

(14) Submittal procedures.

(15) Sustainable design requirements.

(16) Preparation of record documents.

(17) Use of the premises, including dust and noise control.

(18) Parking and parking permits, see contractor parking policy http://policy.uconn.edu/2016/02/04/contractor-parking-policy/

(19) Work restrictions including working hours.

(20) Owner's occupancy requirements.

(21) Responsibility for temporary facilities and controls.

(22) Procedures for disruptions and shutdowns.

(23) Construction waste management and recycling.

(24) Office, work, and storage areas.

(25) Equipment deliveries and priorities.

(26) Owner’s Vendor Code of Conduct Policy: http://policy.uconn.edu/2013/02/12/vendor-code-of-conduct/

(27) Security.

(28) Progress cleaning.

(29) Owner’s Contractor Environmental Health and Safety Manual, Safety procedures, including the Owner’s Hazard Communication Program and policies on pest control, asbestos, lead-based paints, lockout/tagout procedures, excavation and trenching, disposal of PCB containing light ballasts, use of solvents, solvent or epoxy based paints, confined space entries and use of open flames.

4. Minutes: Entity responsible for conducting meeting will record and distribute meeting minutes.

B. Project Meeting: The Contractor shall schedule and conduct meetings and conferences at Project site unless otherwise indicated. Project Meetings shall at a minimum be performed bi-weekly.

1. Attendees: Coordinate with the Owner and Architect/Engineer a set day and time for the project meetings. Identify in collaboration with the Owner and Architect/Engineer any other key individuals whose presence is required. This meeting is not intended to be inclusive with any Pre-installation Conference or Progress Meeting requirements. List all required attendees.

2. Agenda: Prepare the meeting agenda. Distribute the agenda to all invited attendees at least two working days prior to the scheduled meeting. Discuss items of significance that could affect progress, including but not limited to the following:

a. Review of the previous meeting minutes. Record corrections and any agreements/disagreements

b. Progress of the work.

c. Compare construction progress with the Project's approved CPM Construction Schedule.

(1) Review progress since the last meeting.

(2) Identify activities on the critical path that are ahead of schedule, or behind schedule, in relation to the contractually accepted construction schedule.

(3) Provide recovery steps on how construction behind schedule will be brought back into schedule.

(4) Discuss whether schedule revisions are required to ensure that current and subsequent activities will be completed within the Contract Time.

d. Review Contractor's site safety reports.

e. Review any critical work sequencing and long-lead items.

f. Review sustainable design/LEED requirements.

g. Review of any management or supervisory responsibilities:

(1) Contractor conduct

(2) Unacceptable behavior of any worker

(3) Background screening log.

(4) Staffing / Man Power.

(5) Protection of construction personnel and adjacent sites.

(6) Dust and noise control.

(7) Progress cleaning.

(8) Temporary facilities and controls.

(9) Moisture and mold control.

(10) Construction waste management and recycling.

(11) Security

(12) Hazard Communication Program

h. Review of Submittal log.

i. Review of RFI log.

j. Review of proposed change order (PCO) log.

k. Review of Change Order log.

l. Review any labor or wage issues.

m. Review any Payment issues.

n. Review the next two weeks look ahead schedule.

(1) Identify any testing and inspections to be performed.

(2) Any work restrictions including working hours.

(3) Scheduling of disruptions and shutdowns

(4) Equipment deliveries and priorities.

o. Review any other critical issues.

3. Minutes: Entity responsible for conducting meeting will clearly identify themselves as the author of the minutes, record and distribute meeting minutes. The meeting will record significant discussions and agreements achieved. With each meeting held, minutes shall reflect the author, all invited attendees, any additional attendees who attended the meeting and those invited attendees that did not attend the meeting. Distribute the meeting minutes to everyone concerned for review, including but not limited to Owner and Architect/Engineer, within three (3) days of the meeting.

4. Minutes from the previous meeting shall be reviewed at the start of each subsequent meeting. Document any clarifications, corrections, or exceptions

to the contents of the minutes and identify the attendee requesting the adjustments. Resolve any disagreements that may arise with the contents and document accordingly and document within the minutes. Minutes shall not require acceptance prior to the next scheduled meeting, unless the project has reached final completion and final payment is in process.

C. Pre-installation Conferences: Conduct a preinstallation conference at Project site before each construction activity that requires coordination with other construction.

1. Attendees: Installer and representatives of manufacturers and fabricators involved in or affected by the installation and its coordination or integration with other materials and installations that have preceded or will follow, shall attend the meeting. Advise Architect/Engineer, and Owner of scheduled meeting dates.

2. Agenda: Review progress of other construction activities and preparations for the particular activity under consideration, including but not limited to requirements for the following:

a. Contract Documents.

b. Options.

c. Related RFIs.

d. Related Change Orders.

e. Purchases.

f. Deliveries.

g. Submittals, shop drawings, product data, and quality control samples.

h. Sustainable design requirements.

i. Review of mockups.

j. Possible conflicts.

k. Compatibility requirements.

l. Time schedules.

m. Weather limitations.

n. Manufacturer's written instructions.

o. Warranty requirements.

p. Compatibility of materials.

q. Acceptability of substrates.

r. Temporary facilities and controls.

s. Space and access limitations.

t. Safety.

u. Regulations of authorities having jurisdiction.

v. Testing and inspecting requirements.

w. Commissioning

x. Installation procedures.

y. Coordination with other work.

z. Required performance results.

aa. Protection of adjacent work.

bb. Protection of construction and personnel.

3. Record significant conference discussions, agreements, and disagreements, including required corrective measures and actions.

4. Reporting: Entity responsible for conducting meeting will record and distribute meeting minutes. Meeting minutes shall identify who the author is and date the meeting was held. Distribute minutes of the meeting to each party present and to other parties requiring information.

5. Do not proceed with installation if the conference cannot be successfully concluded. Initiate whatever actions are necessary to resolve impediments to performance of the Work and reconvene the conference at earliest feasible date.

D. Progress Meetings: Conduct progress meetings with Contractor's subcontractors at the Project Site at regularly (minimum bi-weekly) scheduled intervals. Contractor shall:

1. Coordinate dates of meetings with preparation of payment requests.

2. Attendees: In addition to representatives of Owner and Architect/Engineer, each contractor, subcontractor, supplier, and other entity concerned with current progress or involved in planning, coordination, or performance of future activities shall be represented at these meetings. All participants at the meeting shall be familiar with Project and authorized to conclude matters relating to the Work.

3. Agenda: Review and correct or accept minutes of previous progress meeting. Review other items of significance that could affect progress. Include topics for discussion as appropriate to status of Project.

   a. Contractor's CPM Construction Schedule: Review progress since the last meeting. Determine whether each activity is on time, ahead of schedule, or behind schedule, in relation to Contractor's construction schedule. Determine how construction activities behind schedule will be expedited; secure commitments from parties involved to do so. Discuss whether schedule revisions are required to ensure that current and subsequent activities will be completed within the Contract Time.

      (1) Review schedule for next period.

   b. Review present and future needs of each entity present, including but not limited to the following:

      (1) Interface requirements.

      (2) Sequence of operations.

      (3) Status of submittals.

      (4) Status of stainable design documentation, if required.

      (5) Deliveries.

      (6) Off-site fabrication problems.

      (7) Access.

      (8) Site utilization.

      (9) Temporary facilities and controls.

      (10) Progress cleaning.

      (11) Quality and work standards.

      (12) Status of correction of deficient items.

      (13) Field observations.

      (14) Status of RFIs.

      (15) Status of proposal requests.

      (16) Pending changes.

      (17) Status of Change Orders.

(18) Pending claims and disputes.

(19) Documentation of information for payment requests.

(20) Safety and Subcontractor Conduct on the site.

4. Minutes: Entity responsible for conducting the meeting will record and distribute the meeting minutes to each party present and to parties requiring information. Meeting minutes shall identify who the author is and the date the meeting was held. Contractor shall distribute copies of minutes of the meeting to each party present and to other parties who should have been present. Include a brief summary, in narrative form, of progress since the previous meeting and report. Submit report no later than 3 days after each progress meeting date.

a. Schedule Updating: Revise Contractor's CPM Construction Schedule after each progress meeting where revisions to the schedule to recover have been discussed. Issue revised schedule concurrently with the report of each meeting.

E. Coordination Meetings: Conduct Project coordination meetings at regular intervals convenient for all parties involved. Project coordination meetings are in addition to specific meetings held for other purposes, such as progress meetings and preinstallation conferences.

1. Attendees: Every party currently involved in coordination or planning for the construction activities involved. All participants at the meetings shall be familiar with Project and authorized to conclude matters relating to the Work.

2. Reporting: Record meeting results and distribute copies to everyone in attendance and to others affected by decisions or actions resulting from each meeting. Meeting minutes shall identify who the author is and the date the meeting was held.

F. Landscape Status Updates: Contractor shall require and receive regular written status updates from his landscape sub-contractor(s) on portions of the work the subcontractor is performing. Contractor shall distribute status updates to the Owner.

1.09 GENERAL ADMINISTRATION

A. Call Before You Dig (CBYD): Contractor is responsible to monitor the conditions of the markings and maintain their appearance throughout the duration necessary to complete the work associated with the markings. At the time of Substantial Completion, the Contractor is responsible for the complete removal of all CBYD markings required for the project that is applied to any hard surface.

B. GIS Surveying: Contractor is responsible for documenting field conditions and new installation using coordinates mapping. In cases of subsurface material installation, such mapping shall include depth to the top of the material, size and characteristics of the material and distance adjacencies to other subsurface identified material, active or inactive that is exposed. Contractor is responsible for ensuring that any

flags or markings used in establishing the mapping are removed at the completion of the survey work for the day. Contractor shall immediately have removed any flags or markings that are no longer needed.

C. Contractor shall comply to the requirements outlined within CGS Sec. 4e-70 relating to confidential information,

D. Contractor and Subcontractor Information:

1. Before the first application for payment, provide a list of all known Contractors, Subcontractors and Suppliers who are intended to be working on or supplying material and equipment to the project for review and acceptance by the Owner.

2. List shall include key information about the Contractor and subcontracts assigned under this Project in a format acceptable to the Owner. Please refer to the format template located at the following weblink. http://updc.uconn.edu/

a. Identify if the business is a nonresident business, are they verified or unverified by the State of Connecticut Department of Revenue Services pursuant to Conn. Gen. Stat. §12-430 and follow all requirements associated.

b. Such list shall be updated and resubmitted with each month's application for payment pencil draft.

E. Application for Payment Procedures:

1. Contractor shall submit for review within 30 days of contract signing, a project specific schedule of values for payment. Schedule of values are to represent at a minimum the following (as applicable) and shall have a value associated with each element:

a. General Conditions:

(1) Bond Costs (actual)

(2) Project and Administrative Management

(3) Supervisory and Daily Site Record keeping

(4) Safety Management

(5) Site Trailer and associated general site operational expenses

(6) Temporary Fencing – Site Logistics

(7) Security Management

(8) Coordination Documents – assigned value shall be no less than 25 % of total general conditions value. Payment shall be made based on full complete coordination of systems within the documents.

(9) Closeout Documents – assigned value shall be no less than 30 % of total general conditions value.

b. List of CSI Division sections identified within the contract documents, broken down by:

(1) Labor

(2) Material

(3) Equipment (large value pieces and/or systems

c. If the project requires work to be performed in phases, breakdown by phase and then by General Conditions and by CSI Divisions.

d. If the project work entails multiple floors/stories, breakdown by floor and then by CSI Divisions.

e. List only those Change Orders that have been fully executed by all parties.

(1) Include with the CO listing within the Schedule of Values, any CCD that was issued in support of the Change Order. Example: CO 3 / CCD 2 Insulation of water line Gample.

f. Do not list alone PCO's or CCD's within the schedule of values.

g. Only those change orders that have been fully executed by all parties shall be listed and allowed to be a part of the month's billing. Should the Contractor list a change order prior to full execution and receipt back, regardless if the application has been certified by the Architect/Engineer, the Owner shall not be responsible for any delays in payment and shall have the right to reject the application and ask for a resubmission with removal of any change orders as deemed warranted.

2. Attachments to the Application for Payment for processing:

a. Pencil Draft

(1) Copy of email sent to designated UPDC email address submitting report and payroll in support of previous months' work.

(2) Copy of certified summary cover sheet Worker Distribution Report.

(3) Copy of transmittal to CHRO in support of submitting updates to the Contractor's affirmative action plan.

(4) Subcontractor list updated in the format required by the Owner.

b. First Application for payment

(1) List of all Subcontractors and Suppliers who will be providing or performing work under the contract in the format outlined by the Owner. Format is available at https://updc.uconn.edu/contractors-working-at-uconn/

(2) Formal submission to the Owner for review and approval, Contractor and subcontractors (where applicable) list of company owned equipment in the format outlined in Section 2600 Contract Modifications.

(3) Formal submission to the Owner for review and approval, Contractor, subcontractor and sub-tiers Labor Rates.

(4) Equipment Rates: Contractor shall submit for review and approval by the Owner an hourly, weekly and monthly rate for each self-owned piece of equipment. Such rates shall not exceed the rate reflected in Equipment Watch. The list of equipment shall provide the following information:

(a) Type of Equipment

(b) Year

(c) Make

(d) Model

(e) Size / Capacity

(f) Registration #

F. Certified Payroll: Pursuant to CGS Sec. 31-53, original certified payrolls with a statement of compliance shall be submitted.

1. On a monthly basis, all certified payrolls for the project shall be received from their subcontractors by the Contractor. The Contractor is responsible to track, monitor and report for compliance with the Department of Labor and Owner requirements.

a. Documents are to be submitted in the format acceptable to the Connecticut Department of Labor.

b. Verify all certified payrolls are being received from all subcontractors and sub-tier subcontractors performing work on the project for the period of time being reported.

c. Confirm payroll information has been included not limited to paycheck number.

d. Ensure each payroll reporting is filled out completely even if the worker is the “owner” of the company performing the work. Reporting as “Owner” performance with no payment information is not in conformance with CTDOL requirements.

e. Verify that the Subcontractor has a current compliant Connecticut Worker’s Compensation policy.

(1) Obtain the subcontractor’s workers compensation policy premium sheet.

(2) Policies that state “Interstate” do not meet the statutory requirements.

f. Verify the appropriate Agent for the Subcontractor submitting the payroll has certified each reporting week.

g. Obtain and verify current OSHA 10 certifications for any and all workers who performed on the project. Include a copy of each workers OSHA 10 certification, when first reporting them on certified payrolls.

h. Ensure all certified payrolls for the month have been received for work performed by the various subcontractors and sub-tiers, inclusive of all weeks within the month worked and not worked.

i. Ensure that the last required submission of certified payrolls are identified as the “Final” submission.

j. Utilize the Worker Geographic Report data template and record each weekly Certified Payroll submission from each subcontractor for work performed or not under the project for that particular week. Record alphabetically.

k. Refer to the following weblink for the most current acceptable format template: https://updc.uconn.edu/contractors-working-at-uconn/

2. Contractor shall submit all certified payrolls (including their own) and supporting documents to the Owner in the following manner:

a. Submit electronically to **UPDCcertifiedpayroll@uconn.edu**

b. Submit monthly at the same time as when the pencil draft of the application for payment is submitted for approval.

c. Provide in the Subject line of the email the following information in the order represented:

(1) Project #

(2) Contractor Name

(3) Period Reporting On

Example: 901211 Turner April 2016 Certified Payrolls

d. Organize the documents in the following manner prior to uploading the document into the email:

(1) Contractor's Worker Geographic Distribution Report

(2) Contractor's certified payrolls with each week of the month in sequential order;

(3) Subcontractors certified payrolls organized alphabetically by subcontractor and then within each subcontractor submission, by each sequential week of the month being reported;

(4) Ensure that each side of a payroll page (if double sided) has been scanned to include their certification for that payroll reporting;

(5) In the body of the email, identify any non-compliance issues relating to the payrolls being reported on to the Owner.

3. Failure to consistently submit complete complying certified payrolls to the Owner in the format outlined, any costs incurred by the Owner to perform the requirements, shall be a reimbursement from the Contractor to the Owner.

4. Worker Geographic Distribution Report (Report): Following the close of each consecutive month's certified payrolls and in conjunction with the certified payroll submission, the Contractor who is directly contracted with the Owner shall submit a project specific Worker Geographic Distribution Report on all workers who performed work on the project for the period of time represented on the report.

a. For the purposes of this reporting, the following terms shall have the meaning as assigned.

(1) "Covered Project" is a project that is subject to Section 31-53(a) of the Connecticut General Statutes.

(2) "Monthly" means a calendar month of each calendar year.

(3) "Residence" is the state in which a Worker resides, as reflected in the payroll records of such Worker's employer.

(4) "Subcontractor" is any subcontractor or sub-subcontractor of the Contractor, which subcontractor or sub-subcontractor employs Workers on the Project.

(5) "Wages" are the wages that are subject to Section 31-53(a) of the Connecticut General Statutes (including any amounts paid to an employee welfare fund).

(6) "Worker" is an employee of the Contractor or a Subcontractor (as defined hereinabove), which employee is working on the Project and whose wages for such work is subject to Section 31-53(a) of the Connecticut General Statutes.

b. The monthly Worker Geographic Distribution Report shall summarize and include all Contractor and subcontractors' worker data information provided in a format required by the Owner.

(1) The numbers of hours of Project work for which such Worker was paid during such month reporting.

(2) The Wages (as defined hereinafter) paid to such Worker during such month's reporting.

(3) The State of residence for such Workers being reported as of the close of such month's reporting.

(4) The reporting shall not contain any personally identifiable information about a worker.

(5) Certified payrolls applicable shall accompany the monthly reporting.

(6) Owner format shall be used and not altered in any way without explicit approval from the Owner. Refer to the following weblink for the most current acceptable format template: **https://updc.uconn.edu/contractors-working-at-uconn/**

(7) Failure to submit Worker Geographic Distribution Report in the format required, any costs the Owner incurs to perform the requirements outlined shall be reimbursed by the Contractor.

c. Such report shall be updated and resubmitted monthly with the submission of each month's application for payment as a condition of release of payment.

d. Such report uncertified by the Contractor does not relieve the Contractor of the accuracy or completeness of information that is or should be represented within the report.

G. CHRO Reporting: Submit to the Commission on Human Rights and Opportunities (CHRO) on a monthly basis their Small Contractor/Minority Business Enterprise

Utilization, Payment Status and Materials Consumption Reports (i.e., Form CHRO cc-257, cc-257a, cc-257b, cc-258a and cc-259). ORIGINAL reports shall be sent by the 25th day following the end of each calendar month to:

1. Commission on Human Rights and Opportunities (CHRO)

   25 Sigourney Street, 7th Floor
   Hartford, CT 06106

2. Provide a copy of the transmittal sent to CHRO to the following Owner contact: veronica.cook@uconn.edu.

3. Do not send any CHRO reports with the certified payroll or to anyone else other than those identified, unless otherwise directed by the Owner. Upon request, the Contractor shall provide documentation to the Owner of compliance with small business and minority business enterprise contracting goals.

H. Contractor's Background Screenings:

1. Prior to, and as a condition of mobilization on site, the Contractor shall submit a Background Screening Control Plan process on each worker for each project regardless of past screenings and shall be consistent with the requirements of the University's Capital Project's Background Screening Guidelines. The University's Capital Project's Background Screening Guidelines can be found: http://updc.uconn.edu

   a. Identify the background screening company who will be conducting the screenings for all workers under this project. And the process they will be using to perform the screenings.

   b. Identify how the Contractor will control access to the Construction Site to restrict non-screened or non-approved workers from entering the work site and performing work.

1. Provide a report monthly listing all workers who have been approved for work, disqualified for work and who are pending review. Compare list of workers from certified payroll against the list of background screenings performed. Report those subcontractors and the worker(s) who performed work on the project site but did not go through a background check.

PART 2 – PRODUCTS (NOT USED)

PART 3 – EXECUTION (NOT USED)

END OF SECTION

SECTION 01-3200

CONSTRUCTION PROGRESS DOCUMENTATION

PART 1 – GENERAL

1.01 RELATED DOCUMENTS

A. Drawings and general provisions of the Contract, including General and Supplementary Conditions and other Division 01 Specification Sections, apply to this Section.

1.02 SUMMARY

A. Section includes administrative and procedural requirements for documenting the progress of construction during performance of the Work, including the following:

1. Contractor's Project Milestone Construction schedule.
2. Contractor’s CPM schedule
3. Construction CPM schedule updating reports.
4. Daily construction reports.
5. Material location reports.
6. Site condition reports.
7. Special reports.
8. GIS Mapping of existing and new conditions

B. Related Requirements:

1. Retain subparagraphs below to cross-reference requirements Contractor might expect to find in this Section but are specified in other Sections.
2. Division 01 Section "Submittal Procedures" for submitting schedules and reports.
3. Division 01 Section "Quality Requirements" for submitting a schedule of tests and inspections.

1.03 DEFINITIONS

A. Activity: A discrete part of a project that can be identified for planning, scheduling, monitoring, and controlling the construction project. Activities included in a construction schedule consume time and resources.

1. Critical Activity: An activity on the critical path that must start and finish on the planned early start and finish times.

2. Predecessor Activity: An activity that precedes another activity in the network.

3. Successor Activity: An activity that follows another activity in the network.

B. Cost Loading: The allocation of the schedule of values for the completion of an activity as scheduled. The sum of costs for all activities must equal the total Contract Sum unless otherwise approved by Owner.

C. Milestone: An action or event marking a significant stage or stages in the life of a construction project. Significant milestones may include but not limited to (where applicable):

1. Projected start date. Provide sufficient time for the Owner and Contractor to execute the contract.

2. Pre-Construction Meeting

3. Critical and non-critical Submittal submissions and approvals (provide sufficient time for reviews as outlined in the contract)

   a. Pre-functional checklist of equipment submittals, as a part of commissioning

4. Mobilization with temporary fencing system and project signage installation.

5. Construction start date

6. Site work start date

7. Demolition start date

8. Demolition completion date

9. Site work completion date

10. Utilities upgrades start date (each)

11. Utilities shutdown / tie-ins (each)

12. Utilities upgrades completion date (each)

13. Structural Foundations start date

14. Structural Foundations completion date

15. Elevator Shaft start date

16. Elevator Shaft completion date
17. Building Core start date
18. Building Core completion date
19. Skeleton Framing completion date
20. Façade installation start date
21. Façade installation completion date
22. Roof framing completion date
23. Window installation start date
24. Window installation completion date
25. Water Tight Building date
26. Mechanical infrastructure start date
27. Plumbing infrastructure start date
28. Electrical infrastructure start date
29. Interior framing start date
30. Interior wall enclosure start date
31. Interior wall enclosure completion date
32. Ceiling installation start date
33. Ceiling installation completion date
34. Finish installation start date
35. Field completion of functional equipment / Submission of Statement of preparedness
36. Substantial Completion
37. Final Completion

D. CPM: Critical path method, which is a method of planning and scheduling a construction project where activities are arranged based on activity relationships. Network calculations determine when activities can be performed and the critical path of Project.

E. Critical Path: The longest connected chain of interdependent activities through the network schedule that establishes the minimum overall Project duration and contains no float.

F. Event: The starting or ending point of an activity.

1. Float: The measure of leeway in starting and completing an activity. The excess time included in a construction schedule to accommodate such items as severe unusual inclement weather and associated delays, equipment failures, and other such unscheduled events. It is the contingency time associated with a path or chain of activities and represents the amount of time by which the early finish date of an activity may be delayed without impacting the critical path and delaying the overall completion of the Project. Any difference in time between the Contractors' approved early completion date and the Contract Completion Date shall be considered a part of the Project float. Float time belongs to the Owner. Free Float: The time (in days) by which an activity may be delayed or lengthened without adversely impacting upon the early start day of any activity following in the chain.

2. Total Float: The difference (in days) between the maximum time available within which to perform an activity and the duration of an activity. It represents the time by which an activity may be delayed or lengthened without impacting the Time for Completion or the Contract Completion Date.

3. Resource Loading: The allocation of manpower and equipment necessary for the completion of an activity as scheduled.

1.04 INFORMATIONAL SUBMITTALS

A. Contractor's CPM Construction Schedule shall be submitted within 14 days of contract execution and notice to proceed or at the time of the pre-construction meeting whichever comes first. Should Contractor fail to submit a project specific CPM construction schedule within time table outlined, costs associated for an independent third party scheduler hired by the Architect/Engineer to establish and maintain for the duration of the project will be borne by the Contractor. Contractor shall provide input and adhere to the established CPM construction schedule.

B. Format for Submittals: Submit required schedule submittals in the following format:

1. Working electronic copy of construction schedule file, as indicated.

2. Acceptable software:

a. Microsoft office for small uncomplicated projects as determined by the Owner.

b. Primavera 6 for large more complicated projects as determined by the Owner

3. Format submission

a. In the format detail as required of the particular schedule requirements

b. Software as determined by the Owner.

c. PDF (ADOBE PRO) electronic file.

d. Three (3) paper copies.

C. Contractor's Project Milestone Construction Schedule: Initial schedule, of size required to display entire schedule for entire construction period.

1. Milestone schedule shall be submitted upon receipt of Letter of Intent as a condition to award and shall be in a size required to display a readable schedule for entire construction period. Document page size shall not exceed 8.5x11 and is not limited to a single page.

2. Submit an electronic copy of schedule, using software acceptable to the Owner, and labeled to comply with requirements for submittals.

3. Contractually accepted Contractor's Project Milestone Construction schedule shall not be altered from what was initially accepted. Contractor's Project Milestone Construction schedule can only be adjusted by fully executed change order.

D. Contractor's CPM Schedule: Subsequent schedule that details all activities associated with the work. The Contractor's CPM schedule represents the Contractor's plan for achieving the contractual completion of the project. Updates to and the submission of the Contractor's CPM schedule shall not represent acceptance by the Owner and/or Architect/Engineer.

E. CPM Reports: Concurrent with CPM schedule, submit each of the following reports. Format for each activity in reports shall contain activity number, activity description, cost and resource loading, original duration, remaining duration, early start date, early finish date, late start date, late finish date, and total float in calendar days.

1. Activity Report: List of all activities sorted by activity number and then early start date, or actual start date if known.

2. Logic Report: List of preceding and succeeding activities for all activities, sorted in ascending order by activity number and then early start date, or actual start date if known.

3. Total Float Report: List of all activities sorted in ascending order of total float.

4. Earnings Report: Compilation of Contractor's total earnings from the Notice to Proceed until most recent Application for Payment.

5. Resource Loading Report: List all activities initial resource loadings as compared to actual for the month.

F. CPM Construction Schedule Updating Reports: Submit with each Applications for Payment.

G. Daily Construction Reports: Submit at monthly application for payment intervals.

H. Material Location Reports: Submit at monthly application for payment intervals.

I. Geographic Distribution Reports: Submit at monthly application for payment intervals.

J. Site Condition Reports: Submit at time of discovery of differing conditions.

K. Special Reports: Submit at time of unusual event.

1.05 COORDINATION

A. Coordinate preparation and processing of schedules and reports with performance of construction activities and with scheduling and reporting of separate Owner's contractors and/or Contractor's subcontractors.

B. Coordinate Contractor's construction schedule with the schedule of values, submittal schedule, progress reports, payment requests, and other required schedules and reports.

1. Secure time commitments for performing critical elements of the Work from entities involved.

2. Coordinate each construction activity in the network with other activities and schedule them in proper sequence.

PART 2 – PRODUCTS

2.01 CONTRACTOR'S CONSTRUCTION SCHEDULE, GENERAL

A. Time Frame: Extend schedule from date established for the Notice to Proceed to the date required for Substantial Completion.

1. Anticipated Notice to Proceed date: For purposes in establishing the start date of the project schedule, represent the start date as an additional seven (7) days beyond the time allotted within the letter of intent for required documents to be submitted by the Contractor to the Owner for contract execution. Should the time anticipated for the project start date be exceeded due to Contractor's failure to provide accurate timely documents and/or availability to fully execute the contract, Contractor shall not be entitled to an extension to the date outlined for Substantial Completion. Should the time anticipated for the project start date be exceeded due to Owner's failure to provide accurate timely documents and/or availability to fully execute the contract, the Contractor shall be entitled to an extension to the date outlined for Substantial Completion equal to the days taken by the Owner to issue a Notice to Proceed. Such extension shall not be compensable.

2. Substantial Completion date shall not be changed for reasons not caused by the Owner. Should the time allotted within the letter of intent for contract required documents to be submitted by the Contractor, be exceeded due to Contractors failure to provide such accurate timely documents within the time frame identified the Contractor shall not be entitled to an extension to the date outlined for Substantial Completion.

3. Contract completion date shall not be changed by submission of a schedule that shows an early completion date, unless specifically authorized by Change Order.

B. Activities: Treat each story or separate area as a separate numbered activity for each main element of the Work. Comply with the following:

1. Activity Duration: Define activities so no activity is longer than twenty (20) days, unless specifically allowed by the Owner.

2. Procurement Activities: Include procurement process activities for long lead items and major items, requiring a cycle of more than sixty (60) days, as separate activities in schedule. Procurement cycle activities include, but are not limited to, submittals, approvals, purchasing, fabrication, and delivery.

3. Submittal Review Time: Include review and resubmittal times indicated in Division 01 Section "Submittal Procedures" in schedule. Coordinate submittal review times in Contractor's construction schedule with submittal schedule.

4. Startup and Testing Time: Include no fewer than fifteen (15) days for startup and testing.

5. Substantial Completion: Indicate completion in advance of date established for Substantial Completion, and allow a minimum of fifteen (15) days for Architect/Engineer's administrative procedures necessary for Punch List and certification of Substantial Completion.

6. Punch List and Final Completion: Include not more than thirty (30) days for completion of punch list items and final completion.

C. Milestones: Include milestones indicated in the Contract Documents in schedule, including, but not limited to, the Notice to Proceed, Utility interruptions, Substantial Completion, and Final Completion.

D. Two Week Look ahead schedule: Prepare summary report indicating activities scheduled to occur or commence prior to submittal of next schedule update. Summarize the following issues:

1. Unresolved issues.

2. Unanswered Requests for Information.

3. Rejected or unreturned submittals.

4. Notations on returned submittals.

5. Pending modifications affecting the Work and Contract Time.

E. Recovery Schedule: When periodic update indicates the Work is behind the current approved schedule, submit a separate recovery schedule indicating means by which Contractor intends to regain compliance with the schedule. Indicate changes to working hours, working days, crew sizes, and equipment required to achieve compliance, and date by which recovery will be accomplished.

F. Computer Scheduling Software: Prepare schedules using current version of a program that has been developed specifically to manage construction schedules.

2.02 CONTRACTOR'S CONSTRUCTION SCHEDULE (CPM SCHEDULE)

A. CPM Schedule: Prepare Contractor's construction schedule of sufficient detail to indicate all significant construction activities. The level of detail should be such that no activity should exceed twenty (20) days. Where similar activities continue beyond the twenty (20) day limit, these activities should be broken into subgroups, specific areas, or phases so that the twenty (20) day maximum duration is maintained.

1. Develop network diagram in sufficient time to submit CPM schedule for review no later than fourteen (14) days after date established of contract execution.

a. Failure to include any work item required for performance of this Contract shall not excuse Contractor from completing all work within applicable completion dates, regardless of Owner's approval of the schedule.

2. Establish procedures for monitoring and updating CPM schedule and for reporting progress. Coordinate procedures with progress meeting and payment request dates.

3. Subparagraph below coordinates between working days of time and calendar days. Under AIA Document A201, the Contract Time is in calendar days.

4. Use "one calendar day" as the unit of time for individual activities. Indicate nonworking days, restricted days as outlined in Section 01-1000 Summary and holidays incorporated into the schedule in order to coordinate with the Contract Time.

B. CPM Schedule Preparation: Prepare a list of all activities required to complete the Work. Using the startup network diagram, prepare a skeleton network to identify probable critical paths.

1. Activities: Indicate the estimated time duration, sequence requirements, and relationship of each activity in relation to other activities. Include estimated time frames for the following activities:

a. Date of Notice to Proceed

b. Preparation and processing of submittals.

c. Mobilization and demobilization.

d. Purchase of materials.

e. Delivery.

f. Fabrication.

g. Utility interruptions.

h. Installation.

i. Special Equipment

j. Testing.

k. Commissioning

l. Telecommunications installations

m. Furniture installations (where applicable) and Owner installations

n. Punch list and final completion.

o. Activities occurring following final completion.

2. Critical Path Activities: Identify critical path activities, including those for interim completion dates. Scheduled start and completion dates shall be consistent with Contract milestone dates.

3. Processing: Process data to produce output data on a computer-drawn, time-scaled network. Revise data, reorganize activity sequences, and reproduce as often as necessary to produce the CPM schedule within the limitations of the Contract Time.

4. Format: Mark the critical path. Locate the critical path near center of network; locate paths with most float near the edges.

a. Subnetworks on separate sheets are permissible for activities clearly off the critical path.

2.03 REPORTS

A. Daily Construction Reports: Prepare a daily construction report recording the following information concerning events at Project site:

1. Day of the week, date and the time of day the report is filled out.

2. List of subcontractors at Project site.

3. List of separate contractors at Project site.

4. Approximate count of personnel by subcontractor and trade labor work being performed at Project site.

5. Separately document any and all change order work being performed, the subcontractor/contractor performing and number of personnel. Obtain and confirm work performed, manpower trade category and hours worked against additional work tickets of the subcontractor or Contractor.

6. Construction equipment at Project site.

7. Material deliveries and confirmation receipts of quantities delivered.

8. Materials and Equipment not yet incorporated into the work yet stored at the Project site.

9. High and low temperatures and general weather conditions, including presence of rain or snow.

10. Accidents.

11. Meetings and significant decisions.

12. Unusual events (see special reports).

13. Stoppages, delays, shortages, and losses.

14. Meter readings and similar recordings.

15. Emergency procedures.

16. Orders and requests of authorities having jurisdiction.

17. Daily additional work tickets

18. Photographs taken

19. Services connected and disconnected.

20. Equipment or system tests and startups.

21. Partial completions and occupancies.

22. Substantial Completions authorized.

B. Material Location Reports: At monthly intervals, prepare and submit a comprehensive list of materials delivered to and stored at Project site. List shall be cumulative, showing materials previously reported plus items recently delivered. Include with list a statement of progress on and delivery dates for materials or items

of equipment fabricated or stored away from Project site. Indicate the following categories for stored materials:

1. Material stored prior to previous report and remaining in storage.

2. Material stored prior to previous report and since removed from storage and installed.

3. Material stored following previous report and remaining in storage.

C. Site Condition Reports: Immediately on discovery of a difference between site conditions and the Contract Documents, prepare and submit a detailed report. Submit with a Request for Information. Include a detailed description of the differing conditions, together with recommendations for changing the Contract Documents.

D. Daily Additional Work Tickets: Prepare daily additional work tickets recording the following information for a change in the work issued by a CCD. Tickets shall be documented separately for each trade labor category being performed that day and shall reflect at a minimum the following:

1. Date and day of the week

2. Change work being performed and percentage progress

3. Number of workers working on the change consistently and their respective work labor category.

4. Number of hours worked working on the change consistently per trade labor category.

5. Materials delivered and used specifically for the change work.

6. Equipment delivered and/or used specifically and consistently for the change work. If equipment already exists on site and is used to perform the change work, number of hours the equipment is used shall be documented.

2.04 SPECIAL REPORTS

A. General: Submit special reports directly to Owner within one (1) day of an occurrence. Distribute copies of report to parties affected by the occurrence.

B. Reporting Unusual Events: When an event of an unusual and significant nature occurs at Project site, whether or not related directly to the Work, prepare and submit a special report. List chain of events, persons participating and response by Contractor's personnel, evaluation of results or effects, and similar pertinent information. Advise Owner in advance when these events are known or predictable.

2.05 GIS MAPPING

A. When the subsurface is open and there are existing and new utilities and any abandon piping/ductbanks conditions exposed, Contractor is responsible for

subcontracting with a surveyor proficient in GIS mapping to collect the metadata as outlined by the Owner of the utilities or abandon piping/ductbanks before back filling. Should Contractor fail to properly survey the conditions, at the Contractors cost, they shall open up the subsurface so that such conditions can be properly documented as outlined.

PART 3 – EXECUTION

3.01 CONTRACTOR'S CONSTRUCTION SCHEDULE

A. Contractor's CPM Construction Schedule Updating: At monthly intervals, update schedule to reflect actual construction progress and activities. Issue schedule one week before each regularly scheduled project and progress meetings.

1. Revise schedule immediately after each meeting or other activity where revisions have been recognized or made. Issue updated two week look ahead schedule concurrently with the report of each such meeting. In the event the updated Schedule exceeds the Construction Completion date recognized in the contract, the Contractor must accompany the update with a recovery schedule.

2. Include a report with updated schedule that indicates every change, including, but not limited to, changes in logic, durations, actual starts and finishes, and activity durations.

3. As the Work progresses, indicate final completion percentage for each activity.

B. Distribution: Distribute copies of the updated schedule to Architect, Owner, separate contractors, testing and inspecting agencies, and other parties identified by Contractor with a need-to-know schedule responsibility.

1. Post copies in Project meeting rooms and temporary field offices.

2. When revisions are made, distribute updated schedules to the same parties and post in the same locations. Delete parties from distribution when they have completed their assigned portion of the Work and are no longer involved in performance of construction activities.

END OF SECTION

SECTION 01-3233

PHOTOGRAPHIC DOCUMENTATION

PART 1 – GENERAL

1.01 RELATED DOCUMENTS

A. Drawings and general provisions of the Contract, including General and Supplementary Conditions and other Division 01 Specification Sections, apply to this Section.

1.02 SUMMARY

A. Section includes administrative and procedural requirements for the following:

1. Preconstruction photographs.

2. Periodic construction photographs.

3. Final completion construction photographs.

B. Related Requirements:

1. Division 01 Section "Submittal Procedures" for submitting photographic documentation.

2. Division 01 Section "Closeout Procedures" for submitting photographic documentation as project record documents at Project closeout.

3. Division 02 Section "Selective Demolition" for photographic documentation before selective demolition operations commence.

1.03 INFORMATIONAL SUBMITTALS

A. Key Plan: Submit key plan of Project site and building with notation of vantage points marked for location and direction of each photograph. Indicate elevation or story of construction. Include same information as corresponding photographic documentation.

1. Digital Photographs: Submit image files within three days of taking photographs.

2. Digital Camera: Minimum sensor resolution of 8 megapixels.

3. Format: JPG2 with a minimum 3200 by 2400 pixels, uncompressed or layered in unaltered original files, with same aspect ratio as the sensor, uncropped, date and time stamped with key plan location number, in a folder named by date of photograph, accompanied by key plan file.

4. Identification: Provide the following information with each image description in file metadata tag:

   a. Name of Project.

   b. Name and contact information of the photographer.

   c. Name of Contractor.

   d. Date photograph was taken.

   e. Description of vantage point, indicating location, direction (by compass point), and elevation or story of construction.

   f. Unique sequential identifier keyed to accompanying key plan.

B. Construction Photographs: Submit digital images in JPG2 format of photos taken within the month with the pencil draft of invoice being submitted for review.

C. Aerial Photographs: If requested by the Owner, submit digital images in JPG2 format as outlined for digital cameras. If it is intended to use drones, Contractor must notify the Owner prior to use.

1.04 USAGE RIGHTS

A. Provide or transfer copyright usage rights from photographer to Owner for unlimited reproduction of photographic documentation.

PART 2 – PRODUCTS (NOT USED)

PART 3 – EXECUTION

3.01 CONSTRUCTION PHOTOGRAPHS

A. Photographer: Engage a qualified photographer to take construction photographs.

B. General: Take photographs using the maximum range of depth of field, and that are in focus, to clearly show the Work. Photographs with blurry or out-of-focus areas will not be accepted.

C. Digital Images: Submit digital images exactly as originally recorded in the digital camera, without alteration, manipulation, editing, or modifications using image-editing software.

   1. Date and Time: Include date and time in file name for each image.

   2. Field Office Images: Maintain one set of images accessible in the field office at Project site, available at all times for reference. Identify images in the same manner as those submitted to the Owner.

D. Preconstruction Photographs: Before commencement of demolition for renovation projects or starting new construction, take photographs of Project site and surrounding properties, including existing items to remain during construction, from different vantage points, as directed by Architect/Engineer.

1. Flag construction limits before taking construction photographs.

2. Take not less than 20 photographs to show existing conditions adjacent to property before starting the Work.

3. Take not less than 20 photographs of existing buildings either on or adjoining property to accurately record physical conditions at start of construction.

4. Take additional photographs as required to record settlement or cracking of adjacent structures, pavements, and improvements.

5. Contractor has the option of video-taping as opposed to digital photos.

E. Periodic Construction Photographs: Take no less than 20 photographs daily or at significant start and finish points of construction phases with the cutoff date associated with each Application for Payment. Select vantage points to show status of construction and progress since last photographs were taken.

1. Significant Critical activities include but not limited to:

a. Commencement of the Work

b. Depth and connections of all utilities of subgrade construction.

c. Above-grade structural framing.

d. Exterior building enclosure.

e. Interior Work, through date of Substantial Completion.

F. Owner-Directed Construction Photographs: From time to time, Owner may instruct photographer about number and frequency of photographs and general directions on vantage points. Select actual vantage points and take photographs to show the status of construction and progress since last photographs were taken.

G. Time-Lapse Sequence Construction Photographs: Take photographs as indicated, to show status of construction and progress since last photographs were taken.

1. Frequency: Take photographs hourly or as required by industry standards, coinciding with the cutoff date associated with each Application for Payment.

H. Vantage Points: As identified in the Key Plan and accepted by the Owner, follow select vantage points. During each of the following construction phases, Final Completion Construction Photographs: Take color photographs after date of Substantial Completion for submission as project record documents. Key plan will inform photographer of desired vantage points or as directed by the Owner.

1. Do not include date stamp.

I. Additional Photographs: Owner may request photographs in addition to periodic photographs specified.

1. Three days' notice will be given, where feasible.

2. In emergency situations, take additional photographs within 24 hours of request.

3. Circumstances that could require additional photographs include, but are not limited to, the following:

a. Special events planned at Project site.

b. Immediate follow-up when on-site events result in construction damage or losses.

c. Photographs to be taken at fabrication locations away from Project site. These photographs are not subject to unit prices or unit-cost allowances.

d. Substantial Completion of a major phase or component of the Work.

e. Extra record photographs at time of final acceptance.

f. Owner's request for special publicity photographs.

END OF SECTION

SECTION 01-3300

SUBMITTAL PROCEDURES

PART 1 – GENERAL

1.01 RELATED DOCUMENTS

A. Drawings and general provisions of the Contract, including General and Supplementary Conditions and other Division 01 Specification Sections, apply to this Section.

1.02 SUMMARY

A. Section includes requirements for the submittal schedule and administrative and procedural requirements for submitting Shop Drawings, Product Data, Samples, and other submittals, including;

1. Contractor’s construction schedule
2. Submittal schedule
3. Shop Drawings
4. Coordination Drawings and Layout
5. Daily Construction Reports
6. Product Data
7. Samples
8. Site Mobilization Plan
9. Safety Plan
10. Background Screenings

B. Related Requirements:

1. AIA Document A101 Contract Article 5 "Payments" for submitting Applications for Payment and the schedule of values.
2. Division 01 Section "Construction Progress Documentation" for submitting schedules and reports, including Contractor's construction schedule.
3. Division 01 Section "Operation and Maintenance Data" for submitting operation and maintenance manuals.

4. Division 01 Section "Project Record Documents" for submitting record Drawings, record Specifications, and record Product Data.

1.03 DEFINITIONS

A. Action Submittals: Written and graphic information and physical samples that require Architect/Engineer's responsive action. Action submittals are those submittals indicated in individual Specification Sections as "action submittals."

B. Informational Submittals: Written and graphic information and physical samples that do not require Architect/Engineer's responsive action. Submittals may be rejected for not complying with requirements contract. Informational submittals are those submittals indicated in individual Specification Sections as "informational submittals."

C. Portable Document Format (PDF-Adobe Pro): An open standard file format licensed by Adobe Systems used for representing documents in a device-independent and display resolution-independent fixed-layout document format.

1.04 ACTION SUBMITTALS

A. Submittal Schedule: Submit a schedule of submittals, arranged in chronological order by dates required by construction schedule. Include time required for review, ordering, manufacturing, fabrication, and delivery when establishing dates. Include additional time required for making corrections or revisions to submittals noted by Architect/Engineer and additional time for handling and reviewing submittals required by those corrections.

1. Coordinate submittal schedule with list of subcontracts, the schedule of values, and Contractor's construction schedule.

2. Initial Submittal: Submit concurrently with startup construction schedule. Include submittals required during the first 30-60 days of construction. List those submittals required to maintain orderly progress of the Work and those required early because of long lead time for manufacture or fabrication.

3. Final Submittal: Submit concurrently with the first complete submittal of Contractor's CPM construction schedule which is due within twenty (20) days from contract execution.

a. Submit revised submittal schedule to reflect changes in current status and timing for submittals.

4. Format: Arrange the following information in a tabular format:

a. Project Name and Project Number

b. Scheduled date for first submittal.

c. Specification Section number and title.

d. Submittal category: Action; informational.

e. Name of subcontractor.

f. Scheduled date for Architect's final release or approval.

B. Submittals Initially Required: Contractor shall initially submit for review prior to or at the pre-construction meeting the following submittals not limited to:

1. Emergency / Point of Contact Information: Point of contact shall be persons whom are directly employed by the Contractor who are designated to be available 24/7 for the duration of the project. Such person(s) shall be accessible and responsive as required within the University's Contractors Environmental Health and Safety Manual. Such responsiveness shall also include but not be limited to remedies to the perimeter construction fence and security breaches to the project site.

2. Contractor's Health and Safety Plan specific to the project: Prior to, and as a condition of mobilization on site, the Contractor shall submit a Safety Plan consisting of no less than the following information:

a. Safety Data Sheets for all potentially harmful substances.

b. A list of Contractor, Subcontractor, and Owner personnel to be notified in the event of an emergency.

c. A list of Contractor's personnel to be notified by the Owner in the event of an emergency during "off" hours.

d. Evacuation Plans.

e. Emergency medical procedures.

f. Locations of emergency medical equipment.

g. Completed Contractor Receipt Acknowledgement Form from the last page of the University of Connecticut, Contractor EHS Manual http://www.ehs.uconn.edu/ppp/Contractor_EHS_Manual.pdf

h. Executed Confined Space as required by the Owner's EHS manual. Utilize provided forms.

3. Contractor's Quality control plan specific to the project.

a. Outline responsibilities within the Contractor's project team.

b. Responsibility with review of submittals being received from their subcontractors before passing them along to the Architect/Engineer. What are the mechanisms within your process of review of your various trade submittals to ensure proper coordination has been performed prior to forwarding the submittals to the Architect/Engineer?

4. Copy of the transmittal letter of the project specific Affirmative Action Plan submission to CHRO and Owner. Transmittal must reflect the project name and number and date transmitted.

5. Detailed CPM Construction Schedule specific to the project detailed in a format required within the contract documents.

   a. Breakdown complete Submittal Schedule.

6. List of all Subcontractors and Suppliers in a format required by the Owner. Utilize Owner's template that can be found at the following web link under "working with us / Contractor and Consultants": http://updc.uconn.edu.

7. Background Screening Control Plan (where applicable)

8. Labor Rate Submissions for all sub and sub-tier subcontractor's self-performed trade labor work and each classification. Follow the requirements outlined within other sections of Division One.

9. Specific Trade Certification Submittals, not limited to:

   a. Telecommunication technician certifications (where applicable)

   b. Millwork certification (where applicable)

   c. Millwork installer certification (if different from the millwork fabricator)

   d. Contract Arborist (where applicable)

   e. ACI certification for flatwork concrete installations

   f. AWI certification for fabrication and installation of millwork product

10. Erosion Control Plan

11. Any proposed Changes to the Site Logistics Plan and a justification for why it is being proposed.

1.05 SUBMITTAL ADMINISTRATIVE REQUIREMENTS

A. Coordination: Coordinate preparation and processing of submittals with performance of construction activities.

1. Coordinate each submittal with fabrication, purchasing, testing, delivery, other submittals, and related activities that require sequential activity.

2. Submit all submittal items required for each Specification Section concurrently unless partial submittals for portions of the Work are indicated on approved submittal schedule.

3. Submit action submittals and informational submittals required by the same Specification Section as separate packages under separate transmittals.

4. Coordinate transmittal of different types of submittals for related parts of the Work so processing will not be delayed because of need to review submittals concurrently for coordination.

    a. Architect/Engineer reserves the right to withhold action on a submittal requiring coordination with other submittals until related submittals are received.

B. Processing Time: Allow time for any submittal review, including time for resubmittals, as follows. Time for review shall commence on Architect/Engineer's receipt, Commissioning Agent's receipt and Official having jurisdiction receipt of submittal. No extension of the Contract Time will be authorized because of failure to transmit submittals enough in advance of the Work to permit processing, including resubmittals.

1. Initial Review: Allow fourteen (14) days from receipt for initial review of each submittal. Allow additional time if coordination with subsequent submittals is required. Architect/Engineer will advise Contractor when a submittal being processed must be delayed for coordination.

2. Intermediate Review: If intermediate submittal is necessary, process it in same manner as initial submittal.

3. Resubmittal Review: Allow fourteen (14) days for review of each resubmittal.

4. Sequential Review: Where sequential review of submittals by Architect/Engineer's consultants, Owner, or other parties is indicated, allow twenty-one (21) days for initial review of each submittal.

5. Concurrent Consultant Review: Where the Contract Documents indicate that submittals may be transmitted simultaneously to Architect/Engineer and to Architect/Engineer's consultants, allow fourteen (14) days for review of each submittal. Submittal will be returned to Architect/Engineer before being returned to Contractor.

C. Paper Submittals: Place a permanent label or title block on each submittal item for identification.

1. Indicate name of firm or entity that prepared each submittal on label or title block.

2. Provide a space approximately 6 by 8 inches on label or beside title block to record Contractor's review and approval markings and action taken by Architect/Engineer.

3. Include the following information for processing and recording action taken:

    a. Project name.

b. Date.

c. Name of Architect/Engineer.

d. Name of Contractor.

e. Name of subcontractor.

f. Name of supplier.

g. Name of manufacturer.

h. Submittal number or other unique identifier, including revision identifier.

(1) Submittal number shall use Specification Section number followed by a decimal point and then a sequential number (e.g., 061000.01). Resubmittals shall include an alphabetic suffix after another decimal point (e.g., 061000.01.A).

i. Number and title of appropriate Specification Section.

j. Drawing number and detail references, as appropriate.

k. Location(s) where product is to be installed, as appropriate.

l. Other necessary identification.

4. Additional Paper Copies: Unless additional copies are required for final submittal, and unless Architect/Engineer observes noncompliance with provisions in the Contract Documents, initial submittal may serve as final submittal.

a. Submit one copy of submittal to concurrent reviewer in addition to specified number of copies to Owner.

5. Transmittal for Paper Submittals: Assemble each submittal individually and appropriately for transmittal and handling. Transmit each submittal using a transmittal form. Architect/Engineer will return without review submittals received from sources other than Contractor.

a. Transmittal Form for Paper Submittals: Use AIA Document G810 or similar format.

D. Electronic Submittals: Identify and incorporate information in each electronic submittal file as follows:

1. Assemble complete submittal package into a single indexed file incorporating paper submittal requirements of a single Specification Section and transmittal form with links enabling navigation to each item.

2. Name file with submittal number or other unique identifier, including revision identifier.

    a. File name shall use project identifier and Specification Section number followed by a decimal point and then a sequential number (e.g., LNHS-061000.01). Resubmittals shall include an alphabetic suffix after another decimal point (e.g., LNHS-061000.01.R1).

3. Provide means for insertion to permanently record Contractor's review and approval markings and action taken by Architect/Engineer.

4. Transmittal Form for Electronic Submittals: Use electronic form acceptable to Owner, containing the following information:

    a. Project name.

    b. Date.

    c. Name and address of Architect/Engineer.

    d. Name of Contractor.

    e. Names of subcontractor, manufacturer, and supplier.

    f. Category and type of submittal.

    g. Specification Section number and title.

    h. Related physical samples submitted directly.

    i. Indication of full or partial submittal.

    j. Transmittal number.

    k. Submittal and transmittal distribution record.

    l. Remarks.

E. Options: Identify options requiring selection by Architect/Engineer.

F. Additional Information: On an attached separate sheet, prepared on Contractor's letterhead, record relevant information, requests for data, revisions other than those requested by Architect/Engineer on previous submittals, from requirements in the Contract Documents, including minor variations and limitations. Include same identification information as related submittal.

G. Resubmittals: Make resubmittals in same form and number of copies as initial submittal.

1. Note date and content of previous submittal.

2. Note date and content of revision in label or title block and clearly indicate extent of revision.

3. Resubmit submittals until they are marked with approval notation from Architect/Engineer's action stamp.

H. Distribution: Furnish copies of final submittals to manufacturers, subcontractors, suppliers, fabricators, and installers, authorities having jurisdiction, and others as necessary for performance of construction activities. Show distribution on transmittal forms.

I. Use for Construction: Retain complete copies of submittals on Project site. Use only final action submittals that are marked with approval notation from Architect/Engineer's action stamp.

PART 2 – PRODUCTS

2.01 SUBMITTAL PROCEDURES

A. General Submittal Procedure Requirements: Prepare and submit submittals required by individual Specification Sections. Types of submittals are indicated in individual Specification Sections. Transmit each submittal from Contractor to Owner using a transmittal form.

1. Submit electronic submittals as PDF-Adobe Pro electronic files.

a. Architect/Engineer will return annotated file. Annotate and retain one copy of file as an electronic Project record document file.

2. Action Submittals: Submit five (5) paper copies of each submittal unless otherwise indicated. Architect/Engineer will coordinate reviews and incorporate comments received from officials having jurisdiction and return four (4) copies, one to Owner, two to Contractor and one to the official having jurisdiction.

3. Informational Submittals: Submit five (5) paper copies of each submittal unless otherwise indicated. Architect/Engineer will not return copies.

4. Certificates and Certifications Submittals: Provide a statement that includes signature of entity responsible for preparing certification. Certificates and certifications shall be signed by an officer or other individual authorized to sign documents on behalf of that entity.

a. Provide a digital signature with digital certificate on electronically submitted certificates and certifications where indicated.

b. Provide a notarized statement on original paper copy certificates and certifications where indicated.

B. Product Data: Collect information into a single submittal for each element of construction and type of product or equipment.

1. If information must be specially prepared for submittal because standard published data are not suitable for use, submit as Shop Drawings, not as Product Data.

2. Mark each copy of each submittal to show which products and options are applicable.

3. Include the following information, as applicable:

a. Manufacturer's catalog cuts.

b. Manufacturer's product specifications.

c. Standard color charts.

d. Statement of compliance with specified referenced standards.

e. Notation of coordination requirements.

4. For equipment, include the following in addition to the above, as applicable:

a. Clearances required to other construction, if not indicated on accompanying Shop Drawings.

5. Submit Product Data before or concurrent with Samples.

6. Submit Product Data in the following format:

a. Four (4) paper copies of Product Data unless otherwise indicated. Owner will retain one (1) copy and Architect/Engineer will retain one (1) copy; remainder will be returned.

C. Shop Drawings: Prepare Project-specific information, drawn accurately to scale. Do not base Shop Drawings on reproductions of the Contract Documents or standard printed data.

1. Preparation: Fully illustrate requirements in the Contract Documents. Include the following information, as applicable:

a. Identification of products.

b. Schedules.

c. Compliance with specified standards.

d. Notation of coordination requirements.

e. Notation of dimensions established by field measurement.

f. Relationship and attachment to adjoining construction clearly indicated.

g. Seal and signature of professional engineer if specified.

2. Sheet Size: Except for templates, patterns, and similar full-size drawings, submit Shop Drawings on sheets at least 8-1/2 by 11 inches, but no larger than 30 by 42 inches.

3. Submit Shop Drawings in the following format:

a. Five (5) opaque copies of each submittal. Owner will retain one (1) copy, official having jurisdiction will retain one (1) copy and Architect will retain two (2) copies; remainder will be returned.

D. Samples: Submit physical Samples for review of kind, color, pattern, and texture for a check of these characteristics with other elements and for a comparison of these characteristics between submittal and actual component as delivered and installed.

1. Transmit Samples that contain multiple, related components such as accessories together in one submittal package.

2. Identification: Attach label on unexposed side of Samples that includes the following:

a. Generic description of Sample.

b. Product name and name of manufacturer.

c. Sample source.

d. Number and title of applicable Specification Section.

3. For projects where electronic submittals are required, provide corresponding electronic submittal in addition to physical Sample transmittal, digital image file illustrating Sample characteristics, and identification information for record.

4. Disposition: Maintain sets of approved Samples at Project site, available for quality-control comparisons throughout the course of construction activity. Sample sets may be used to determine final acceptance of construction associated with each set.

a. Samples that may be incorporated into the Work are indicated in individual Specification Sections. Such Samples must be in an undamaged condition at time of use.

b. Samples not incorporated into the Work, or otherwise designated as Owner's property, are the property of Contractor.

5. Samples for Initial Selection: Submit manufacturer's color charts consisting of units or sections of units showing the full range of colors, textures, and patterns available.

    a. Number of Samples: Submit two full set(s) of available choices where color, pattern, texture, or similar characteristics are required to be selected from manufacturer's product line. Architect/Engineer will return submittal with options selected.

6. Samples for Verification: Submit full-size units or Samples of size indicated, prepared from same material to be used for the Work, cured and finished in manner specified, and physically identical with material or product proposed for use, and that show full range of color and texture variations expected. Samples include, but are not limited to, the following: partial sections of manufactured or fabricated components; small cuts or containers of materials; complete units of repetitively used materials; mock-ups, swatches showing color, texture, and pattern; color range sets; and components used for independent testing and inspection.

    a. Number of Samples: Submit three (3) sets of Samples. Architect/Engineer will retain two Sample sets; remainder will be returned. Mark up and retain one returned Sample set as a project record sample.

        (1) Submit a single Sample where assembly details, workmanship, fabrication techniques, connections, operation, and other similar characteristics are to be demonstrated.

        (2) If variation in color, pattern, texture, or other characteristic is inherent in material or product represented by a Sample, submit at least three (3) sets of paired units that show approximate limits of variations.

E. Coordination Drawing Submittals: Comply with requirements specified in Division 01 Section "Project Management and Coordination."

F. Contractor's Construction Schedule: Comply with requirements specified in Division 01 Section "Construction Progress Documentation."

G. Application for Payment and Schedule of Values: Comply with requirements specified in Division 00 Section "Payment Procedures."

H. Test and Inspection Reports and Schedule of Tests and Inspections Submittals: Comply with requirements specified in Division 01 Section "Quality Requirements."

I. Closeout Submittals and Maintenance Material Submittals: Comply with requirements specified in Division 01 Section "Closeout Procedures."

J. Maintenance Data: Comply with requirements specified in Division 01 Section "Operation and Maintenance Data."

K. Site Mobilization / Logistics Plan

1. Prior to the start of operations on the site, the Contractor shall submit to the Owner, a Site Mobilization Logistics Plan which shall indicate pertinent dates and times, logistics, construction fence, laydown area, traffic flow and compliance with the General Requirements to a level of detail commensurate with the complexity of the construction and the sensitivity of the Owner's ongoing activities on site.

L. Safety Plan

1. Prior to, and as a condition of mobilization on site, the Contractor shall submit a Safety Plan consisting of no less that the following information:

   a. Material Safety Data Sheets for all potentially harmful substances.

   b. A list of Contractor, Subcontractor, and Owner personnel to be notified in the event of an emergency.

   c. A list of Contractor's personnel to be notified by the Owner in the event of an emergency during "off" hours.

   d. Evacuation Plans.

   e. Emergency medical procedures.

   f. Locations of emergency medical equipment.

   g. Completed Contactor Receipt Acknowledgement Form from the last page of the University of Connecticut, Contractor EHS Manual (http://www.ehs.uconn.edu/ppp/Contractor_EHS_Manual.pdf)

M. Contractor's Background Screenings

1. Prior to, and as a condition of mobilization on site, the Contractor shall submit a Background Screening Control Plan process on each worker for each project regardless of past screenings and shall be consistent with the requirements of the University's Capital Project's Background Screening Guidelines. The University's Capital Project's Background Screening Guidelines can be found: http://paes.uconn.edu/Contractors.html

   a. Identify the background screening company who will be conducting the screenings for all workers under this project. And the process they will be using to perform the screenings.

   b. Identify how the Contractor will control access to the Construction Site to restrict non-screened or non-approved workers from entering the work site and performing work.

2. Provide a report monthly listing all workers who have been approved for work, disqualified for work and who are pending review.

2.02 DELEGATED-DESIGN SERVICES

A. Performance and Design Criteria: Where professional design services or certifications by a design professional are specifically required of Contractor by the Contract Documents, provide products and systems complying with specific performance and design criteria indicated.

1. If criteria indicated are not sufficient to perform services or certification required, submit a written request for additional information to Architect/Engineer.

B. Delegated-Design Services Certification: In addition to Shop Drawings, Product Data, and other required submittals, submit digitally signed PDF electronic file and three (3) paper copies of certificate, signed and sealed by the responsible design professional, for each product and system specifically assigned to Contractor to be designed or certified by a design professional.

1. Indicate that products and systems comply with performance and design criteria in the Contract Documents. Include list of codes, design loads, and other factors used in performing these services.

PART 3 – EXECUTION

3.01 CONTRACTOR'S REVIEW

A. Action and Informational Submittals: Review each submittal and check for coordination with other Work of the Contract and for compliance with the Contract Documents. Note corrections and field dimensions. Mark with approval stamp before submitting to Architect/Engeiner. Project Closeout and Maintenance Material Submittals: See requirements in Division 01 Section "Closeout Procedures."

B. Incomplete submittals are unacceptable, will be considered nonresponsive, and will be returned for resubmittal without review. Any re-review of any one submittal beyond two reviews by the Architect or Engineer (not a direct cause by the Architect or Engineer), costs associated for their continued review(s) shall be at the Contractor’s expense.

C. Approval Stamp: Stamp each submittal with a uniform, approval stamp. Include Project name and location, submittal number, Specification Section title and number, name of reviewer, date of Contractor's approval, and statement certifying that submittal has been reviewed, checked, and approved for compliance with the Contract Documents.

3.02 ARCHITECT/ENGINEER'S ACTION

A. Action Submittals: Architect/Engineer will review each submittal, make marks to indicate corrections or revisions required, and return the submittal to contractor, Owner will receive final approved submittal from the Architect/Engineer. Architect/Engineer will stamp each submittal with an action stamp and will mark stamp appropriately to indicate action.

B. Informational Submittals: Architect/Engineer will review each submittal and will not return it, or will return it if it does not comply with requirements. Architect/Engineer will forward each submittal to appropriate party.

C. Partial submittals prepared for a portion of the Work will be reviewed when use of partial submittals has received prior approval from Architect/Engineer.

D. Incomplete submittals are unacceptable, will be considered nonresponsive, and will be returned for resubmittal without review.

E. Submittals not required by the Contract Documents may be returned by the Architect/Engineer without action.

END OF SECTION

SECTION 01-4000

QUALITY REQUIREMENTS

PART 1 – GENERAL

1.01 RELATED DOCUMENTS

A. Drawings and general provisions of the Contract, including General and Supplementary Conditions and other Division 01 Specification Sections, apply to this Section.

1.02 SUMMARY

A. Section includes administrative and procedural requirements for quality assurance and quality control.

B. Testing and inspecting services are required to verify compliance with requirements specified or indicated. These services do not relieve Contractor of responsibility for compliance with the Contract Document requirements.

1. Specific quality-assurance and -control requirements for individual construction activities are specified in the Sections that specify those activities. Requirements in those Sections may also cover production of standard products.

2. Specified tests, inspections, and related actions do not limit Contractor's other quality-assurance and control procedures that facilitate compliance with the Contract Document requirements.

3. Requirements for Contractor to provide quality-assurance and control services required by Architect/Engineer, Owner, or authorities having jurisdiction are not limited by provisions of this Section.

C. Related Requirements:

1. Division 01 Section "Allowances" for testing and inspecting allowances.

2. Divisions 01 section Close out

3. Divisions 02 through 33 Sections for specific test and inspection requirements.

1.03 DEFINITIONS

A. Quality-Assurance Services: Activities, actions, and procedures performed before and during execution of the Work to guard against defects and deficiencies and substantiate that proposed construction will comply with requirements.

B. Quality-Control Services: Tests, inspections, procedures, and related actions during and after execution of the Work to evaluate that actual products incorporated into the Work and completed construction comply with requirements. Services do not include contract enforcement activities performed by Architect/Engineer.

C. Mockups: Full-size physical assemblies that are constructed on-site. Mockups are constructed to verify selections made under Sample submittals; to demonstrate aesthetic effects and, where indicated, qualities of materials and execution; to review coordination, testing, or operation; to show interface between dissimilar materials; and to demonstrate compliance with specified installation tolerances. Mockups are not Samples. Unless otherwise indicated, approved mockups establish the standard by which the Work will be judged.

D. Preconstruction Testing: Tests and inspections performed specifically for Project before products and materials are incorporated into the Work, to verify performance or compliance with specified criteria.

E. Product Testing: Tests and inspections that are performed by an NRTL, an NVLAP, or a testing agency qualified to conduct product testing and acceptable to authorities having jurisdiction, to establish product performance and compliance with specified requirements.

1. NRTL: A nationally recognized testing laboratory according to 29 CFR 1910.7.

2. NVLAP: A testing agency accredited according to NIST's National Voluntary Laboratory Accreditation Program.

F. Source Quality-Control Testing: Tests and inspections that are performed at the source, e.g., plant, mill, factory, or shop.

G. Field Quality-Control Testing: Tests and inspections that are performed on-site for installation of the Work and for completed Work.

H. Testing Agency: An entity engaged to perform specific tests, inspections, or both. Testing laboratory shall mean the same as testing agency.

I. Installer/Applicator/Erector: Contractor or another entity engaged by Contractor as an employee, Subcontractor, or Sub-subcontractor, to perform a particular construction operation, including installation, erection, application, and similar operations.

1. Use of trade-specific terminology in referring to a trade or entity does not require that certain construction activities be performed by accredited or unionized individuals, or that requirements specified apply exclusively to specific trade(s).

J. Experienced: When used with an entity or individual, "experienced" means having successfully completed a minimum of five previous projects similar in nature, size, and extent to this Project; being familiar with special requirements indicated; and having complied with requirements of authorities having jurisdiction.

1.04 CONFLICTING REQUIREMENTS

A. Referenced Standards: If compliance with two or more standards is specified and the standards establish different or conflicting requirements for minimum quantities or quality levels, comply with the most stringent requirement. Refer conflicting requirements that are different, but apparently equal, to Architect for a decision before proceeding.

B. Minimum Quantity or Quality Levels: The quantity or quality level shown or specified shall be the minimum provided or performed. The actual installation may comply exactly with the minimum quantity or quality specified, or it may exceed the minimum within reasonable limits. To comply with these requirements, indicated numeric values are minimum or maximum, as appropriate, for the context of requirements. Refer uncertainties to Architect/Engineer for a decision before proceeding.

1.05 INFORMATIONAL SUBMITTALS

A. Contractor's Quality-Control Plan: For quality-assurance and quality-control activities and responsibilities.

B. Qualification Data: For Contractor's quality-control personnel.

C. Contractor's Statement of Responsibility: When required by authorities having jurisdiction, submit copy of written statement of responsibility sent to authorities having jurisdiction before starting work on the following systems:

1. Seismic-force-resisting system, designated seismic system, or component listed in the designated seismic system quality-assurance plan prepared by Architect/Engineer.

2. Main wind-force-resisting system or a wind-resisting component listed in the wind-force-resisting system quality-assurance plan prepared by Architect/Engineer.

3. Any other delegated design work required within the contract documents.

D. Schedule of Tests and Inspections: Prepare in tabular form and include the following:

1. Specification Section number and title.

2. Entity responsible for performing tests and inspections.

3. Description of test and inspection.

4. Identification of applicable standards.

5. Identification of test and inspection methods.

6. Number of tests and inspections required.

7. Time schedule or time span for tests and inspections.

8. Requirements for obtaining samples.

9. Unique characteristics of each quality-control service.

1.06 CONTRACTOR'S QUALITY-CONTROL PLAN

A. Quality-Control Plan, General: Submit project specific quality-control plan within ten (10) days of Notice to Proceed, and not less than five (5) days prior to preconstruction conference. Submit in format acceptable to Owner. Identify personnel, procedures, controls, instructions, tests, records, and forms to be used to carry out Contractor's quality-assurance and quality-control responsibilities. Coordinate with Contractor's construction schedule.

B. Quality-Control Personnel Qualifications: Engage qualified full-time personnel trained and experienced in managing and executing quality-assurance and quality-control procedures similar in nature and extent to those required for Project.

1. Project quality-control manager may also serve as Project superintendent.

C. Submittal Procedure: Describe procedures for ensuring compliance with requirements through review and management of submittal process. Indicate qualifications of personnel responsible for submittal review.

D. Testing and Inspection: In quality-control plan, include a comprehensive schedule of Work requiring testing or inspection, including the following:

1. Contractor-performed tests and inspections including subcontractor-performed tests and inspections. Include required tests and inspections and Contractor-elected tests and inspections.

2. Special inspections required by authorities having jurisdiction and indicated on the "Statement of Special Inspections."

3. Owner-performed tests and inspections indicated in the Contract Documents.

E. Continuous Inspection of Workmanship: Describe process for continuous inspection during construction to identify and correct deficiencies in workmanship in addition to testing and inspection specified. Indicate types of corrective actions to be required to bring work into compliance with standards of workmanship established by Contract requirements and approved mockups.

F. Monitoring and Documentation: Maintain testing and inspection reports including log of approved and rejected results. Include work Architect/Engineer has indicated as nonconforming or defective. Indicate corrective actions taken to bring nonconforming work into compliance with requirements. Comply with requirements of authorities having jurisdiction.

1.07 REPORTS AND DOCUMENTS

A. Test and Inspection Reports: Prepare and submit certified written reports specified in other Sections. Include the following:

1. Date of issue.

2. Project title and number.

3. Name, address, and telephone number of testing agency.

4. Dates and locations of samples and tests or inspections.

5. Names of individuals making tests and inspections.

6. Description of the Work and test and inspection method.

7. Identification of product and Specification Section.

8. Complete test or inspection data.

9. Test and inspection results and an interpretation of test results.

10. Record of temperature and weather conditions at time of sample taking and testing and inspecting.

11. Comments or professional opinion on whether tested or inspected Work complies with the Contract Document requirements.

12. Name and signature of laboratory inspector.

13. Recommendations on retesting and re-inspecting.

B. Manufacturer's Technical Representative's Field Reports: Prepare written information documenting manufacturer's technical representative's tests and inspections specified in other Sections. Include the following:

1. Name, address, and telephone number of technical representative making report.

2. Statement on condition of substrates and their acceptability for installation of product.

3. Statement that products at Project site comply with requirements.

4. Summary of installation procedures being followed, whether they comply with requirements and, if not, what corrective action was taken.

5. Results of operational and other tests and a statement of whether observed performance complies with requirements.

6. Certification that conditions, products, and installation will satisfy all aspects of the warranty.

7. Other required items indicated in individual Specification Sections.

C. Factory-Authorized Service Representative's Reports: Prepare written information documenting manufacturer's factory-authorized service representative's tests and inspections specified in other Sections. Include the following:

1. Name, address, and telephone number of factory-authorized service representative making report.

2. Statement that equipment complies with requirements.

3. Results of operational and other tests and a statement of whether observed performance complies with requirements.

4. Certification that conditions, products, and installation will satisfy all aspects of the warranty

5. Other required items indicated in individual Specification Sections.

1.08 QUALITY ASSURANCE

A. General: Qualifications paragraphs in this article establish the minimum qualification levels required; individual Specification Sections specify additional requirements.

B. Manufacturer Qualifications: A firm experienced in manufacturing products or systems similar to those indicated for this Project and with a record of successful in-service performance, as well as sufficient production capacity to produce required units.

C. Fabricator Qualifications: A firm experienced in producing products similar to those indicated for this Project and with a record of successful in-service performance, as well as sufficient production capacity to produce required units.

D. Installer Qualifications: A firm or individual experienced and certified in installing, erecting, or assembling work similar in material, design, and extent to that indicated for this Project, whose work has resulted in construction with a record of successful in-service performance.

E. Professional Engineer Qualifications: A professional engineer who is legally qualified to practice in jurisdiction where Project is located and who is experienced in providing engineering services of the kind indicated. Engineering services are defined as those performed for installations of the system, assembly, or product that are similar in material, design, and extent to those indicated for this Project.

F. Specialists: Certain Specification Sections require that specific construction activities shall be performed by entities who are recognized experts in those operations. Specialists shall satisfy qualification requirements indicated and shall be engaged for the activities indicated.

1. Requirements of authorities having jurisdiction shall supersede requirements for specialists.

G. Testing Agency Qualifications: An NRTL, an NVLAP, or an independent agency with the experience and capability to conduct testing and inspecting indicated, as documented according to ASTM E 329; and with additional qualifications specified in individual Sections; and, where required by authorities having jurisdiction, that is acceptable to authorities.

H. Manufacturer's Technical Representative Qualifications: An authorized representative of manufacturer who is trained and approved by manufacturer to observe and inspect installation of manufacturer's products that are similar in material, design, and extent to those indicated for this Project.

I. Factory-Authorized Service Representative Qualifications: An authorized representative of manufacturer who is trained and approved by manufacturer to inspect installation of manufacturer's products that are similar in material, design, and extent to those indicated for this Project.

J. Mockups: Before installing portions of the Work requiring mockups, build mockups for each form of construction and finish required to comply with the following requirements, using materials indicated for the completed Work:

1. Build mockups in location and of size indicated or, if not indicated, as directed by Architect/Engineer.

2. Notify Architect/Engineer seven (7) days in advance of dates and times when mockups will be constructed.

3. Employ supervisory personnel who will oversee mockup construction. Employ workers that will be employed during the construction at Project.

4. Demonstrate the proposed range of aesthetic effects and workmanship.

5. Obtain Architect/Engineer's approval of mockups before starting work, fabrication, or construction.

a. Allow seven (7) days for initial review and each re-review of each mockup.

6. Maintain mockups during construction in an undisturbed condition as a standard for judging the completed Work.

7. Demolish and remove mockups when directed unless otherwise indicated.

K. Integrated Exterior Mockups: Construct integrated exterior mockup as indicated on Drawings. Coordinate installation of exterior envelope materials and products for which mockups are required in individual Specification Sections, along with supporting materials.

1.09 QUALITY CONTROL

A. Owner Responsibilities: The Owner will provide independent inspections, tests, and similar quality control services specified to be performed by independent agencies and not by the contractor, except where they are specifically indicated as the contractor's responsibility or are provided by another identified entity. Costs for these services are not included in the Contract Sum.

1. The Owner will employ and pay for services of an independent agency and furnish Contractor with names, addresses, and telephone numbers of testing agencies engaged and a description of types of testing and inspecting they are engaged to perform.

2. Costs for retesting and re-inspecting construction that replaces or is necessitated by work that failed to comply with the Contract Documents, cancellation of a scheduled test short of the required time the testing agency has mandated or in instances where the work is not prepared for testing within a reasonable amount of time from arrival of the testing agent, will be charged to Contractor**,** and the Contract Sum will be adjusted by Change Order.

B. Contractor Responsibilities: Perform additional quality-control activities required to verify that the Work complies with requirements, whether specified or not.

1. Unless otherwise indicated, provide quality-control services specified and those required by authorities having jurisdiction. Perform quality-control services required of Contractor by authorities having jurisdiction, whether specified or not.

2. Where services are indicated as Contractor's responsibility, engage a qualified testing agency to perform these quality-control services.

a. Contractor shall not employ same entity engaged by Owner, unless agreed to in writing by Owner.

3. Notify the Owner and testing agencies at least 24 hours in advance of time when Work that requires testing or inspecting will be performed.

4. Where quality-control services are indicated as Contractor's responsibility, submit a certified written report, in duplicate, of each quality-control service.

5. Testing and inspecting requested by Contractor and not required by the Contract Documents are Contractor's responsibility.

6. Submit additional copies of each written report directly to authorities having jurisdiction, when they so direct.

C. Manufacturer's Field Services: Where indicated, engage a factory-authorized service representative to inspect field-assembled components and equipment installation, including service connections. Report results in writing as specified in Division 01 Section "Submittal Procedures."

D. Manufacturer's Technical Services: Where indicated, engage a manufacturer's technical representative to observe and inspect the Work. Manufacturer's technical representative's services include participation in preinstallation conferences, examination of substrates and conditions, verification of materials, observation of Installer activities, inspection of completed portions of the Work, and submittal of written reports.

E. Retesting/Reinspecting: Regardless of whether original tests or inspections were Contractor's responsibility, provide quality-control services, including retesting and reinspecting, for construction that replaced Work that failed to comply with the Contract Documents.

F. Testing Agency Responsibilities: Cooperate with Architect/Engineer**,** and Contractor in performance of duties. Provide qualified personnel to perform required tests and inspections.

1. Notify Owner, Architect/Engineer**,** and Contractor promptly of irregularities or deficiencies observed in the Work during performance of its services.

2. Determine the location from which test samples will be taken and in which in-situ tests are conducted.

3. Conduct and interpret tests and inspections and state in each report whether tested and inspected work complies with or deviates from requirements.

4. Submit a certified written report, in duplicate, of each test, inspection, and similar quality-control service through Contractor.

5. Do not release, revoke, alter, or increase the Contract Document requirements or approve or accept any portion of the Work.

6. Do not perform any duties of Contractor.

G. Associated Services: Cooperate with agencies performing required tests, inspections, and similar quality-control services, and provide reasonable auxiliary services as requested. Notify agency sufficiently in advance of operations to permit assignment of personnel. Provide the following:

1. Access to the Work.

2. Incidental labor and facilities necessary to facilitate tests and inspections.

3. Adequate quantities of representative samples of materials that require testing and inspecting. Assist agency in obtaining samples.

4. Facilities for storage and field curing of test samples.

5. Delivery of samples to testing agencies.

6. Preliminary design mix proposed for use for material mixes that require control by testing agency.

7. Security and protection for samples and for testing and inspecting equipment at Project site.

H. Coordination: Coordinate sequence of activities to accommodate required quality-assurance and control services with a minimum of delay and to avoid necessity of removing and replacing construction to accommodate testing and inspecting.

1. Schedule times for tests, inspections, obtaining samples, and similar activities.

I. Schedule of Tests and Inspections: Prepare a schedule of tests, inspections, and similar quality-control services required by the Contract Documents. Coordinate and submit concurrently with Contractor's construction schedule. Update as the Work progresses.

1. Distribution: Distribute schedule to Owners Representative, Architect, testing agencies, and each party involved in performance of portions of the Work where tests and inspections are required.

1.10 SPECIAL TESTS AND INSPECTIONS

A. Special Tests and Inspections: Owner will engage a qualified special inspector to conduct special tests and inspections required by authorities having jurisdiction as the responsibility of Owner**,** as indicated in Statement of Special Inspections attached to this Section.

PART 2 – PRODUCTS (NOT USED)

PART 3 – EXECUTION

3.01 TEST AND INSPECTION LOG

A. Test and Inspection Log: Prepare a record of tests and inspections. Include the following:

1. Date test or inspection was conducted.

2. Description of the Work tested or inspected.

3. Date test or inspection results were transmitted to Architect/Engineer.

4. Identification of testing agency or special inspector conducting test or inspection.

B. Maintain log at Project site. Post changes and revisions as they occur. Provide access to test and inspection log for Owner and Architect/Engineer's reference during normal working hours.

3.02 REPAIR AND PROTECTION

A. General: On completion of testing, inspecting, sample taking, and similar services, repair damaged construction and restore substrates and finishes.

1. Provide materials and comply with installation requirements specified in other Specification Sections or matching existing substrates and finishes. Restore patched areas and extend restoration into adjoining areas with durable seams that are as invisible as possible. Comply with the Contract Document requirements for cutting and patching in Division 01 Section "Execution."

B. Protect construction exposed by or for quality-control service activities.

C. Repair and protection are Contractor's responsibility, regardless of the assignment of responsibility for quality-control services.

END OF SECTION

SECTION 01-5000

TEMPORARY FACILITIES AND CONTROLS

PART 1 – GENERAL

1.01 RELATED DOCUMENTS

A. Drawings and general provisions of the Contract, including General and Supplementary Conditions and other Division 01 Specification Sections, apply to this Section.

1.02 SUMMARY

A. Section includes requirements for temporary services and facilities, including:

1. Utilities
2. Temporary construction
3. Construction aids
4. Barriers and enclosures
5. Security
6. Access roads
7. Temporary controls
8. Traffic control
9. Project identification signs and banners
10. Site Logistics
11. Field offices and sheds
12. Temporary use of Roads and Campus grounds
13. Maintenance of temporary services and facilities

B. Related Requirements:

1. Division 01 Section "Summary" for work restrictions and limitations on utility interruptions.

2. Divisions 01 Section “Temporary Tree and Plant Protection” for protection and pruning of existing trees and plants that are affected by execution of the Work.

3. Division 31 Section "Dewatering" for disposal of ground water at Project site.

4. Division 32 Section "Asphalt Paving" for construction and maintenance of asphalt pavement for temporary roads and paved areas.

5. Division 32 Section "Concrete Paving" for construction and maintenance of cement concrete pavement for temporary roads and paved areas.

C. Temporary utilities may include but are not limited to:

1. Temporary electric power and light.

2. Temporary heating, cooling and ventilating.

3. Telephone service.

4. Water services and distribution.

5. Temporary sanitary facilities, including drinking water.

6. Temporary sewers and drainage

7. Temporary fire protection.

D. Security may include but is not limited to:

1. On-Site -24hour security

2. Security enclosures, fences and lockups

3. Gate attendants and gate house

E. Temporary use of access roads and parking include but are not limited to:

1. Temporary roads and paving

2. Temporary use of grounds for parking, access and laydown space

3. Use of public and private roads to the project site.

F. Temporary controls may include but are not limited to:

1. Dewatering facilities and drains

2. Waste disposal

3. Rodent and pest control

4. Environmental protection

5. Nuisance dust control

6. Noise control.

7. Site area fencing

8. Safety controls

9. Covered walkways at entrances and other locations

10. Protection of grounds including protection of existing hard and soft scape surfaces.

1.03 USE CHARGES

A. General: Installation and removal of and use charges for temporary facilities shall be included in the Contract Sum unless otherwise indicated. Allow other entities to use temporary services and facilities without cost, including, but not limited to, Architect, testing agencies, and Owner's contractor and authorities having jurisdiction.

1. Contractor shall furnish and install all necessary temporary switches, wiring, fixtures, bulbs, piping and other devices as may be required to connect to existing systems.

B. Water and Sewer Service from Existing System: Water from Owner's existing water system is available for use for the temporary facility without metering and without payment of use charges. Provide connections and extensions of services as required for construction operations. The Owner reserves the right to require the Contractor to install meters and, if obvious excessive use is observed, to pay for these utilities. Should water restrictions be issues, the use of surface water on Owner's properties or water system of any kind shall be prohibited. Periodic water restrictions have been experienced within the months of July, August and September. And during periods of water restrictions, contractor shall be responsible for providing water to support the project at no cost to the Owner.

1. When water restrictions are in place, Contractor shall provide clean filtered water to the project at no additional cost.

2. The use of water course water is prohibited.

3. The use of water from any fire hydrant without prior permission from the authority having jurisdiction is strictly prohibited.

4. Contractors who violate these provisions shall be billed at a cost to the contractor at a rate triple the cost if the water had been purchased and supplied by a reputable source. In addition, if it is found that water was supplied from a watercourse, the Contractor shall be responsible for all testing costs associated on the materials the water was used for and the water itself, for any contaminates or organic matter not suitable for the

applied use. Contractor shall be responsible for cost of removal of the impacted materials and their replacement.

C. Electric Power Service from Existing System: A moderate quantity of electric power from Owner's existing system is available for use without metering and without payment of use charges. Provide connections and extensions of services as required for construction operations. The Owner reserves the right to require the Contractor to install meters and, if obvious and excessive use is observed, to pay for these utilities.

D. Telecommunications from Existing Systems: A moderate quantity of telecommunications and data connections from Owner's existing system is available for use for a monthly charge. Owner reserves the right to shut down or terminate connections at their discretion.

1. The installation and cost of all data and telecommunications infrastructure required to connect to Owner's identified demarcation for temporary services shall be the responsibility of the Contractor.

2. The use of CAT6 cable is required and shall have lightning protection installed on both the connection and termination ends.

3. Contractor is responsible to supply their own router and operate the device in a routed mode using RFC1918 private addresses as needed for Contractor's LAN segment.

4. Remove all conduit and cabling infrastructure previously installed in support of the temporary service when it is no longer required.

5. There is a cost for Network connections $65/month per each connection. Cost for Voice connection, one-time installation charge $75. And a $35.50/month (plus toll) charge per line. Cost of Voice Mail is an additional $7/month per mailbox.

6. Contractor is responsible for contacting and discontinuing service.

7. To arrange for services, contact UConn Help Center: 860-486-4357

E. Contractor Parking: A moderate quantity of campus parking spaces shall be made available within the contract limits. And remaining contractor parking shall be at a remote location to be identified for each campus. Refer to the Contractor Parking requirements located utilizing the following web link: http://updc.uconn.edu

F. Traffic Control: Contractor is responsible for all traffic control requirements and costs. Any state or local road work must have a traffic control police officer present. Any off road work must have a certified flagman. See further details on Safety and Traffic Controls within this section.

1.04 INFORMATIONAL SUBMITTALS

A. Site Mobilization Logistics Plan:

1. Prior to and as a condition of mobilization on site, the Contractor shall submit to the Owner, a Site Mobilization Logistics Plan which shall indicate pertinent dates and times, logistics, construction fence, laydown area, traffic flow and compliance with the General Requirements to a level of detail commensurate with the complexity of the construction and the sensitivity of the Owner's ongoing activities on site.

2. Contractor's Site Mobilization Logistics Plan shall be within the limits reflected on the contract documents and in a form consistent with the contract documents, specifically the Site Logistics Guidance Plan established by the Owner and Architect. The Contractor Site Logistics Plan, shall be sized the same as the plan sheets in the contract documents and address the following, including but not limited to:

    a. Site Access from SRs 195, 32, 44 and North Hill Side Road for any deliveries and Contractor and site vehicles for all Storr's campus projects are to be utilized.

    b. Phases of work, each phase and all work should be documented

    c. Pedestrian Circulation/Detours, ADA Access

    d. Site lines within the construction fence and outside the construction fence.

    e. Safety within the construction fence and outside the construction fence.

    f. Emergency vehicle circulation, 18' minimum width

    g. Vehicular Circulation/Detours

    h. Tracking pads

    i. Construction Circulation

    j. Site perimeter fencing system location

    k. Signs including vehicular and pedestrian detours, project sign and project banners, including their anticipated respective locations.

    l. Staging Area / Stockpile Area

    m. Trailer with allowable parking spaces

    n. Portable Restrooms

    o. Temporary Utilities hookups

    p. Transit Disruptions not limited to road shut downs or Bus/Emergency vehicle access

3. Provide the following for discussion regarding the Site Logistics Plan:

   a. Submittal of the perimeter area Construction Site fencing system: Type (driven/temporary), fence height, fence construction and installation details taking into account the necessary durability during the seasons, and (i.e. snow plowing).

   b. Submittal of the scrim that connects to the fence system.

   c. Regular maintenance controls of the temporary facilities, fencing and grounds within the fenced in area and accesses to the Construction Site area.

   d. Construction Equipment and Vehicle parking requirements anticipated.

   e. Proposed safety and security measures for the Construction Site.

   f. Heavy equipment special needs

   g. Identify where existing parking spaces are impacted by the project limits reflected on the contract documents Site Logistics Plan. Should the project limits change from what is included on the contract documents through no fault by the Owner, and the area needs impact additional parking spaces from what was previously anticipated or additional temporary fencing is required than what was anticipated on the Site Logistics Plan, the Contractor shall bear all costs associated without additional compensation.

B. Erosion and Sedimentation Control Plan: Show compliance with requirements of DEEP General Permit for the discharge of stormwater and dewatering wastewaters from construction activities or authorities having jurisdiction, whichever is more stringent.

C. Fire-Safety Program: Show compliance with requirements of NFPA 241 and authorities having jurisdiction. Indicate Contractor personnel responsible for management of fire-prevention program.

D. Moisture-Protection Plan: Describe procedures and controls for protecting materials and construction from water absorption and damage.

   1. Describe delivery, handling, and storage provisions for materials subject to water absorption or water damage.

   2. Indicate procedures for discarding water-damaged materials, protocols for mitigating water intrusion into completed Work, and replacing water-damaged Work.

E. Dust- and HVAC-Control Plan: Submit coordination drawing and narrative that indicates the dust and HVAC control measures proposed for use, proposed

locations, and proposed time frame for their operation. Identify further options if proposed measures are later determined to be inadequate. Include the following:

1. Locations of dust-control partitions at each phase of work.

2. HVAC system isolation schematic drawing.

3. Location of proposed air-filtration system discharge Waste handling procedures.

4. Other dust-control measures.

1.05 QUALITY ASSURANCE

A. Regulations: Comply with industry standards and applicable laws and regulations and authorities having jurisdiction, including but not limited to:

1. Building Code requirements

2. Occupational Health and Safety regulations

3. Utilities regulations and requirements

4. Police, Fire Department and Rescue Squad requirements.

5. Environmental protection regulations.

B. Standards: Comply with NFPA Code 241, “Standard for Safeguarding Construction, Alteration, and Demolition Operations”, ANSI-A10 Series standards for “Safety Requirements for Construction and Demolition”, and NECA Electrical Design Library “Temporary Electrical Facilities.”

C. Electric Service: Comply with NECA, NEMA, and UL standards and regulations for temporary electric service. Install service to comply with National Electric Code (NFPA 70) and local provider requirements and officials having jurisdiction. Permit is required.

D. Tests and Inspections: Arrange for authorities having jurisdiction and service providers to observe installation, testing and inspection for each temporary utility before use. Obtain required certifications and permits.

1.06 PROJECT CONDITIONS

A. Temporary Utilities: Prepare a schedule indicating dates of implementation and termination of each temporary utility. At the earliest feasible time and when acceptable to the Owner, change over from use of temporary services to use of the permanent service.

B. Conditions of Use: Keep temporary services and facilities clean and neat in appearance. Operate in a safe and efficient manner. Take necessary fire preventative measures. Do not overload facilities, or permit them to interfere with

progress of work. Do not allow hazardous dangerous or unsanitary conditions, or public nuisances to develop or persist on the site.

C. Construction Site Area: Keep area within and around the perimeter construction fence clean and neat in appearance.

1. Fence system installation and appearance shall be regularly maintained including but not limited to grommets and ties associated with connecting and maintaining toughness of the scrim, fence fabric and/or rails, cleaning scrim, weed whacked,

2. Roads and pathways are to be regularly swept clean of dirt and construction debris. Debris must be properly disposed of in a manner acceptable to the Owner.

3. Completely remove from campus snow and ice on roads and pathways leading from and to the construction site. Stock piling of snow and ice or pushing snow outside the construction fence is not permitted.

4. As growing seasons demand, lawn areas to be kept mowed, planting beds to be kept free of weeds and any tree or scrub trimming is to be performed by plant maintenance personnel.

D. Maintaining outside the perimeter fence, mowing and plowing shall be maintained up to the transition area between the fence and area limit line where the Owner has mowed or plowed to.

E. Always operate and conduct construction activity in a safe and efficient manner. Maintain emergency access and circulation to the facility(s) at all times.

F. Construction Fencing System: The temporary fencing system consists of the fence fabric, rails, poles, and scrim.

1. The system shall be installed immediately as the first step for on-site mobilization. As each section of the fence installation is complete, immediate installation of the scrim shall follow. Fencing system installation shall not commence until all products that make up the system have been delivered to the site and confirmed as meeting the specification requirements. Fencing system shall not be left incomplete over a weekend or holiday. Leave fence system complete with associated scrim and/or banners for the portion of fencing system that has been installed. The Contractor shall not proceed with any other mobilization work until the entire perimeter construction fencing system is complete and in place including the project sign.

2. Fence system shall not be moved or removed without prior authorization from the Owner.

3. In cases where there are safety or environmental conditions, Owner shall direct the Contractor to relocate portions of the fence system at no additional cost to the Owner.

4. Prior to fence system removal, the following conditions are required to be complete:

   a. All excess material and equipment shall be removed from the grounds.

   b. All vehicle parking immediately within the immediate grounds ceases.

   c. All hardscape work has been completed (where feasible).

   d. Complete washing of Owner supplied printed graphical scrim and/or banners.

5. Upon authorization from the Owner to remove the fence system, the Contractor shall perform the following not limited to:

   a. Careful removal, package neatly and secure Owner provide back to the Owner printed scrim and banners. Contractor shall deliver to Owner's designated facility for storage.

   b. Where work was impeded by the fencing system, immediate commence with required planting and grading work.

G. Project Signage: Project signage consist of the Project Construction Sign, the Project Banners and any safety and/or directional signage. All project signage shall be installed and complete within 24 hours of the fence system completion and before work can commence within the site fenced area. Any signage beyond those listed must be preapproved by the Owner prior to posting or installing.

H. Any other signage shall be prohibited on the fence system, site or temporarily attached to equipment or cranes.

PART 2 – PRODUCTS

2.01 MATERIALS

A. General: Provide new materials. Undamaged previously used materials in serviceable condition may be allowed but only at the Owner's acceptance. Costs borne by the Contractor to obtain acceptance from the Owner of used material is at the Contractor's expense. Provide materials suitable for the use intended.

B. Chain-Link Fencing: All fence components shall be new or in like new condition, deviations from those requirements must be preapproved by the Owner. No bent or deformed fence components will be acceptable and shall be replaced immediately upon request. All fence posts shall be driven, set plumb and cut off so that they do not protrude beyond top of fence.

C. Portable Panel Chain Link Fencing: All fence components shall be new or in like new condition. All panels shall be installed plumb horizontal (not perpendicular) and no bent or deformed fence components will be acceptable and will be replaced

immediately upon request. Panels shall be attached to each other via heavy duty couplers to aid in support

1. Fence Height: 8’ Height

2. Fence Material and components: Galvanized Steel

3. Fence Fabric: 4" x 2" opening, 11 gauge welded mesh,

4. Panel Frame: 1-5/8 inch OD

5. Portable Panel Fence Feet: Plastic or rubber black coated concrete filled feet suitable for proper security and safety of the fence system during any type of weather and/or vandalism events Contractor shall not rely on or assume the use of sand bags. If sand bags will be allowed, they can only be used behind the fence within the construction area and shall be all black in color. Support Stays: Shall be installed every 3 panels or as required by fence manufacturer at a minimum to provide extra stability and maximum strength, support shall have a weight of a minimum of 210 pounds. Contractor shall be responsible to obtain engineered support stays necessary to ensure fence stability in cases of any type weather event.

6. Installation: All components shall be square, level, taught and properly secured.

D. Scrim: If conditions allow for plan scrim, scrim shall be in new or like new condition. Torn scrim will not be acceptable and will be replaced immediately upon request.
   1. Plain Woven Scrim

      a. Color: Dark Green

      b. Size: One piece, full height 8’

      c. Opacity: 75% minimum

      d. Edge Treatment: Reinforced sewn edges with grommets every 12” o.c

      e. Attachment: Zip ties color black at 12” o.c. along perimeter, Scrim shall be installed with consistent equal spacing on top and bottom of the fence height. Shall be taught with no ripples. For portable chain link fencing systems, the scrim shall be installed to cover the fence fabric and posts per portable panel.

   2. Printed Graphical Scrim

      a. Attachment: Zip ties color black at 12” o.c. along perimeter, scrim must be continuously taught against each chain link panel.

E. Live Screening: If live screening is required, plantings are to be maintained and kept healthy throughout the course of the project including watering, mulch and trimming as needed.

F. Concrete Barricades: Barricades shall be in new or like new condition. Like new conditions shall be defined as having no paint, markings, cracks or gauges on the expose surface. Barricades shall meet CTDOT and Owner standards.

1. Height: 32 inches' minimum

2. Length: 6-foot minimum

3. Width: 24 inches at the base and 6 inches at the top

4. Barricade shall be wrapped with scrim and be able to accept fencing.

G. Green Safety/Snow Fence: Green safety/snow fence may be utilized for work areas as approved by the Owner. Safety/Snow fence shall not be utilized to protect newly installed landscape.

1. Color: Dark Green

2. Size: 4' Height

3. Openings: 3.5" x 1.75"

4. Posts: Steel Green 1" Min

H. Newly Landscape Area Controls: Stakes and rope shall be utilized for protecting newly seeded/sodded areas to restrict access to and to protect from pedestrian and vehicular traffic. Once area has been determined to be accessible to pedestrian traffic, Contractor shall remove stakes and rope, wash clean and turn over to the Owner.

1. Stake: Eco-Step Stake or approved equal

2. Size: 32" height

3. Color: Green

4. Rope: ¼" diameter polypropylene braided rope, color green

I. Safety Controls: Safety or Traffic Cones shall be in new or like new condition. Like new conditions shall be defined as having no paint, markings, cracks or gauges on the expose surface. Cones shall meet the following standards:

1. Road traffic control cones or tubes shall be florescent orange or florescent yellow in color for CTDOT / MUTCD requirements.

2. Grounds Safety Cones shall be lime green in color per Owner requirements.

J. Dust-Control

1. Adhesive-Surface Walk-off Mats: Provide mats minimum 36 by 60 inches.

2. Polyethylene Sheet: Reinforced, fire-resistive sheet, 10-mil minimum thickness, with flame-spread rating of 15 or less per ASTM E 84 and passing NFPA 701 Test Method 2.

3. Gypsum or Plywood Wallboard: Provide gypsum wallboard complying with requirements of ASTM C 36 on interior walls of temporary partitions.

4. The use of calcium chloride or other chemicals for dust control shall be submitted for approval to the Owner prior to its use.

K. Insulation: Unfaced mineral-fiber blanket, manufactured from glass, slag wool, or rock wool; with maximum flame-spread and smoke-developed indexes of 25 and 50, respectively.

L. Water: Provide potable water approved by local health authorities.

2.02 TEMPORARY FACILITIES

A. Field Offices, General: University will make a room available in Building 19 for the Contractor's field office.

B. Storage and Fabrication Sheds: Provide sheds sized, furnished, and equipped to accommodate materials and equipment for construction operations.

1. Store combustible materials apart from building.

2.03 EQUIPMENT

A. Fire Extinguishers: Portable, UL rated; comply with NFPA 10 and 241 for classification, extinguishing agent and size required by location and class of fire exposure.

B. HVAC Equipment: Unless Owner authorizes use of permanent HVAC system, provide vented, self-contained, liquid-propane-gas or fuel-oil heaters with individual space thermostatic control.

1. Use of gasoline-burning space heaters, open-flame heaters, or salamander-type heating units is prohibited.

2. Heating Units: Listed and labeled for type of fuel being consumed, by a qualified testing agency acceptable to authorities having jurisdiction, and marked for intended location and application.

3. Permanent HVAC System: If Owner authorizes use of permanent HVAC system for temporary use during construction, provide filter with MERV of 8 at each return-air grille in system and remove at end of construction.

C. Air-Filtration Units: Primary and secondary HEPA-filter-equipped portable units with four-stage filtration. Provide single switch for emergency shutoff. Configure to run continuously.

D. Electrical Outlets: Provide properly configured NEMA polarized outlets to prevent insertion of 110-120 volt plugs into higher voltage outlets. Provide receptacle outlets equipped with ground-fault circuit interrupters, reset button and pilot light, for connection of power tools and equipment.

E. Electrical Power Cords: Power cords shall never be subject to physical damage. Provide grounded extension cords; use “hard-service” cords where exposed to abrasion and traffic. Provide waterproof connectors to connect separate lengths of electric cords, if single lengths will not reach areas where construction activities are in progress.

F. Lamps and Light Fixtures: Provide general service LED lighting with wattage required for adequate illumination. Provide guard cages or tempered glass enclosures, where exposed to breakage. Provide exterior LED fixtures where exposed to moisture.

G. First Aid Supplies: Comply with governing regulations.

PART 3 – EXECUTION

3.01 INSTALLATION, GENERAL

A. Use qualified personnel for design and installation of temporary facilities. Locate facilities where they will serve Project adequately and result in minimum interference with performance of the Work. Relocate and modify facilities as required by progress of the Work.

1. Locate facilities to limit site disturbance as specified in Division 01 Section "Summary."

B. Provide each facility ready for use when needed to avoid delay. Maintain and modify as required. Do not remove until facilities are no longer needed or are replaced by authorized use of completed permanent facilities.

C. Temporary buildings (e.g., storage sheds, shops, offices) and utilities may be erected by the Contractor only with the approval of the Owner and shall be built with labor and materials furnished by the Contractor without expense to the Owner. The temporary buildings and utilities shall remain the property of the Contractor and shall be removed at its expense upon completion of the Work. With the advanced written consent of the Owner, the temporary buildings and utilities may be abandoned and need not be removed.

D. Noise Control: The Contractor shall make every effort to minimize noise disruption to occupants of buildings and adjacent buildings. Restrict use of noise making tools and equipment to hours that will minimize complaints from persons or firms near the site. No noise generating work that interferes with classroom operation shall be tolerated. No noise generating work shall be allowed during exam periods where the noise will impact classroom functions. Examples of noise generating work include, but are not limited to sawing, drilling and hammering and/or jackhammering.

1. Avoid use of tools and equipment, which produce harmful noise. No gasoline-powered equipment shall be used during times that the buildings are occupied. No gasoline-powered equipment may be used in the interior of buildings at any time.

2. Refer to 01-1000 Summary as well as 01-5719 Temporary Environmental Controls for more requirements on Noise, Vibration and Odors.

E. Collection and Disposal of Waste: Collect waste from construction areas and elsewhere daily. Comply with requirements of NFPA 241 for removal of combustible waste material and debris. Enforce requirements strictly. Do not hold materials more than 7 days during normal weather or 3 days when the temperature is expected to rise above 80 deg F (27 deg C). Handle hazardous, dangerous, or unsanitary waste materials separately from other waste by containerizing properly. Dispose of material in a lawful manner.

1. All removed materials that are salvageable are the property of the Contractor unless otherwise noted in the specifications.

2. All debris resulting from the performance of this contract will be the property of the Contractor and will be completely removed from the campus and disposed of in a legal manner.

3. Chutes shall be black in color and dumpster type containers designed to keep dust and spillage to a minimum will be used by the Contractor. Dumpsters will be completely covered with a waterproof covering at all times when not in use. Remove from the site daily of all dumpsters that are full or over flowing.

F. Nuisance Dust Control: The following provisions shall apply during demolition or construction phases of work:

1. It is the intent of this specification to insure that nuisance dusts resulting from demolition or construction activities do not impact occupied areas of the building and surrounding the site. The Contractor shall take all measures necessary to accomplish this goal. These measures will include as minimum polyethylene sheeting or wet methods of fugitive dust control. Keep all adjacent roads free and clear of dust and debris.

2. The Contractor shall submit a plan prior to commencement of work that will detail all methods of dust control. This plan shall be approved by the Owner prior to commencement of work. Failure to comply shall result in immediate stoppage of work until effective dust control measures are employed.

3.02 TEMPORARY UTILITY INSTALLATION AND CONTROLS

A. General: Installation of temporary service or connecting to existing service.

1. Provide adequate capacity at each stage of construction. Prior to temporary utility availability, provide trucked-in services.

2. Arrange with appropriate local utility company to install temporary service or connect to existing service. Where the company provides only part of the service, provide the remainder with matching, compatible materials and equipment; comply with the company's recommendations.

3. Obtain easements to bring temporary utilities to the site, where the Owner's easements cannot be used for that purpose.

4. Arrange with utility company, Owner, and existing users for time when service can be interrupted, if necessary, to make connections for temporary services.

5. For temporary service or connection to existing or new service: The Owner must be notified at least four (4) weeks in advance of any proposed interruption in order that all affected departments may be advised and have time to adjust their schedules accordingly. For new service, there are limited times within a year that the services can be impacted for a total shut down. Arrange adequate time with the Owner in preparation for the shutdown connections. Construction schedule must allow for advanced notification. Failure to plan ahead and notify the Owner of a pending shut down shall not relieve the Contractor from lost time. Owner reserves the right to limit the down time to a specified number of net hours and to set the date for each occasion of complete shutdown.

6. Any service (steam, water, electricity, etc.) shutdown which will interrupt the continuity of an experiment or be detrimental to a research project or which, in the opinion of the Owner, is required for other valid reasons, shall be maintained by safe and adequate temporary means and such temporary piping, wiring and associated devices shall be removed when no longer required.

7. Sewers and Drainage: If sewers are available, provide temporary connection to remove effluent that can be discharged lawfully. If sewers are not available or cannot be used, provide drainage ditches, dry wells, stabilization ponds and similar facilities. If neither sewers nor drainage facilities can be lawfully used for discharge of effluent, provide containers to remove and dispose of effluent off the site in a lawful manner.

8. Connect temporary sewers to the municipal system as directed by the sewer department officials.

9. Maintain temporary sewers and drainage facilities in a clean, sanitary condition. Following heavy use, restore normal conditions promptly.

10. Water Service: Install water service and distribution piping in sizes and pressures adequate for construction. Connect to Owner's existing water service facilities. Clean and maintain water service facilities in a condition acceptable to Owner. At Substantial Completion, restore these facilities to condition existing before initial use.

11. Sterilization: Sterilize temporary water piping in accordance with AWWA requirements prior to use.

B. General: Installation of any Utilities

1. Soils: Filter out soil of construction debris, chemicals, oils and similar contaminants that might clog sewers or pollute waterways before discharge.

   a. Existing soils shall be handled in the manner outlined within the University's Contractor Environmental Health and Safety Manual.

   b. Residual soils shall be tested for contaminants prior to its removal from Owner's contiguous property.

   c. Testing shall be incompliance with the residential direct exposure criteria and/or the applicable pollutant mobility criteria.

   d. Soils cannot be transported from one Owner property to another without testing and acceptance of the test results by the Owner.

   e. Residual soils shall not be saved and stock piled on any Owner property, without prior written approval from the Owner.

2. Sanitary Facilities: Provide temporary toilets, wash facilities, and drinking water for use of construction personnel. Comply with requirements of authorities having jurisdiction for type, number, location, operation, and maintenance of fixtures and facilities.

   a. Use of Owner's existing sanitary facilities will not be permitted.

   b. Toilets: Install self-contained toilet units. Shield toilets to ensure privacy. Use of pit-type privies will not be permitted.

   c. Provide toilet tissue, paper towels, paper cups and similar disposable materials for each facility. Provide covered waste containers for used materials.

3. Wash Facilities: Install wash facilities supplied with potable water at convenient locations for personnel involved in handling materials that require wash-up for a healthy and sanitary condition. Dispose of drainage properly. Supply cleaning compounds appropriate for each condition.

4. Provide safety showers, eyewash fountains and similar facilities for convenience, safety and sanitation of personnel

5. Drinking Water Facilities: Provide drinking water including paper supply.

6. Heating: Provide temporary heating required by construction activities for curing or drying of completed installations or for protecting installed construction from adverse effects of low temperatures or high humidity.

Select equipment that will not have a harmful effect on completed installations or elements being installed.

7. Coordinate ventilation requirements to produce the ambient condition required and minimize consumption of energy.

8. Steam from the Owner's steam lines shall be provided at no cost to the Contractor. Contractor shall supply, install and maintain all temporary piping, radiators or unit heaters, reducing valves, steam traps and other necessary fittings and accessories. Traps shall be provided to prevent steam from entering main returns. The temporary heating plan shall meet the approval of the Architect/Engineer, Fire Marshall and Owner. Provide temporary heat required by construction activities, for curing or drying of completed installations or protection of installed construction from adverse effects of low temperature or high humidity. Select safe equipment that will not have a harmful effect on completed installations or elements being installed. Coordinate ventilation requirements to produce the ambient condition required and minimize consumption of energy.

9. The Contractor shall provide temporary heat during construction for interior areas included in the Contract, and any adjacent or nearby occupied areas, to counteract low temperatures or excessive dampness and in any event, between October 15th and May 15th, maintain during said period or periods until final completion of the Contract, unless otherwise approved by the Owner in writing. Provide heat and ventilation to maintain specified conditions for construction operations and to protect materials and finishes from damage by temperature or humidity. All installation and operating costs shall be paid by the Contractor. Unless otherwise specified in the Contract Documents, the temporary heating shall be sized to maintain the following conditions on a 24-hour-per-day basis:

10. Occupied Dormitory or Living Areas: 68 degrees F

11. Office Spaces/Laboratories/Classrooms: 68 degrees F

12. Warehouses/Storage: 55 degrees F

13. The areas listed above are for example only. The Owner shall have sole discretion to assign minimum heating criteria.

14. Electrical Power Service: Provide weatherproof, grounded electric power service and distribution system of sufficient size, capacity, and power characteristics during construction period. Include meters, transformers, overload protected disconnects, automatic ground-fault interrupters and main distribution switch gear.

15. Except where overhead service must be used, install electric power service underground.

16. Power Distribution System: Install wiring overhead, and rise vertically where least exposed to damage. Where permitted, wiring circuits not exceeding 125

volts, AC 20 ampere rating, and lighting circuits may be nonmetallic sheathed cable where overhead and exposed for surveillance

17. Lighting: Provide weatherproof, grounded LED lighting

18. Whenever overhead floor or roof deck has been installed, provide temporary lighting with local switching.

19. Install and operate temporary lighting that will fulfill security and protection requirements, without operating the entire system, and will provide adequate illumination for construction and traffic and safety conditions.

20. Install exterior yard and sign lights so that signs are visible when Work is being performed.

21. Security: Provide temporary security of the construction site to fulfill safety and security requirements. Protect all workers, stored and installed materials, equipment and property during and after working hours.

22. Telephones: Provide temporary or cellular telephone service for all personnel engaged in construction activities, throughout the construction period. Contractor shall arrange and pay for his own telephone service.

23. Distribute to the project Team and Post for public viewing a list of important telephone numbers.

    a. Police and fire departments.

    b. Ambulance service.

    c. Contractor's home office.

    d. Contractor's emergency after-hours telephone number.

    e. Architect's office.

    f. Engineers' offices.

    g. Owner’s office.

    h. Principal subcontractors' field and home offices.

C. Isolation of Work Areas in Occupied Facilities: Prevent dust, fumes, and odors from entering occupied areas.

1. Prior to commencing work, isolate the HVAC system in area where work is to be performed according to coordination drawings.

    a. Disconnect supply and return ductwork in work area from HVAC systems servicing occupied areas.

b. Maintain negative air pressure within work area using HEPA-equipped air-filtration units, starting with commencement of temporary partition construction, and continuing until removal of temporary partitions is complete.

2. Maintain dust partitions during the Work. Use vacuum collection attachments on dust-producing equipment. Isolate limited work within occupied areas using portable dust-containment devices.

3. Perform daily construction cleanup and final cleanup using approved, filter-equipped vacuum equipment.

D. Ventilation and Humidity Control: Provide temporary ventilation required by construction activities for curing or drying of completed installations or for protecting installed construction from adverse effects of high humidity. Select equipment that will not have a harmful effect on completed installations or elements being installed. Coordinate ventilation requirements to produce ambient condition required and minimize energy consumption.

1. Provide dehumidification systems when required to reduce substrate moisture levels to level required to allow installation or application of finishes.

2. Provide dehumidification as required to mitigate mold growth.

E. Fire Protection: Until fire protection needs are supplied by permanent facilities, install and maintain temporary fire protection facilities of the types needed to protect against reasonably predictable and controllable fire losses. Comply with NFPA 10 “Standard for Portable Fire Extinguishers,” and NFPA 241 “Standard for Safeguarding Construction, Alterations and Demolition Operations.”

1. Locate fire extinguishers where convenient and effective for their intended purpose, but not less than one extinguisher on each floor at or near each usable stairwell.

2. Store combustible materials in containers in fire-safe locations.

3. Maintain unobstructed access to fire extinguishers, fire hydrants, temporary fire protection facilities, stairways and other access routes for fighting fires. Prohibit smoking in hazardous fire exposure areas.

4. Provide supervision of all welding operations, combustion type temporary heating units, and similar sources of fire ignition.

5. No gasoline shall be stored in or close to the building at any time.

6. Facilitate fire department access and review.

3.03 SUPPORT FACILITIES INSTALLATION

A. General: Comply with the following:

1. Provide construction for temporary offices, shops, and sheds located within construction area or 30 feet of building lines that is noncombustible according to ASTM E 136. Comply with NFPA 241.

2. Maintain support facilities until Architect Schedules Substantial Completion inspection. Remove before Substantial Completion. Personnel remaining after Substantial Completion will be permitted to use permanent facilities, under conditions acceptable to Owner.

3. Locate field offices, storage sheds, sanitary facilities and other temporary construction and support facilities for easy access.

4. Ensure that any existing walkways, egress paths, exterior lighting or emergency phones impacted by the construction area are relocated.

B. Field Offices and Sheds: A field office is (not) required for this project, however should the Contractor choose to provide a field office, see requirements below:

1. Provide non-combustible construction for offices, shops and sheds located within the construction area, or within 30 feet of building lines. Comply with requirements of NFPA 241.

2. Field Offices: Provide insulate, weather tight temporary offices with electric lighting, air conditioning and heat and of sufficient size to accommodate required office personnel at the Project Site. The Field Office shall have two rooms, each approximately 150 square feet in size. The offices shall have ample natural light, a heater of sufficient capacity to maintain 70 degrees F in winter and an air conditioner of sufficient capacity to maintain 75 degrees F in summer. No trailer will be allowed on Owner property unless permanent markings indicating the name of the company are clearly visible. Keep the office clean and orderly of use for small progress meetings. Furnish and equip offices with a minimum of the following:

a. Furnish with desks and chairs, file cabinets, plan tables, plan racks, waste receptacles, conference room table and at least eight chairs.

b. Equip with a water cooler and private toilet complete with water closet, lavatory and mirror-medicine cabinet unit.

c. Equip with a 5 lb ABC fire extinguisher and an OSHA-approved first aid kit.

d. Equip with a facsimile machine and copier for use by the Contractor, Owner e and Architect/Engineer.

C. Temporary Roads and Paved Areas: Comply with the following:

1. The Contractor shall, under regulation prescribed by the Owner, use only established roadways, or use temporary roadways constructed by the Contractor when and as authorized by the Owner. When materials are transported in prosecuting the Work, vehicles shall not be loaded beyond the

loading capacity recommended by the manufacturer of the vehicle or prescribed by any Federal, State, or local law or regulation. When it is necessary to cross curbs or sidewalks, the Contractor shall protect them from damage and provide appropriate traffic markings and cross walks. The Contractor shall repair or pay for the repair of any damaged curbs, sidewalks, or roads.

2. Provide dust-control treatment that is non-polluting and non-tracking. Reapply treatment as required to minimize dust. The use of calcium chloride or other chemicals for dust control shall be submitted for approval to the Owner prior to its use.

3. Construct and maintain temporary roads and paving to adequately support the indicated loading and to withstand exposure to traffic during the construction period. Locate temporary paving for roads, storage areas and parking where the same permanent facilities will be located. Review proposed modifications to permanent paving with the Architect.

    a. Paving: Comply with Division-2 Section “Asphalt Concrete Paving” for construction and maintenance of temporary paving.

    b. Coordinate temporary paving development with subgrade grading, compaction, installation and stabilization of subbase, and installation of base and finish courses of permanent paving.

    c. Install temporary paving to minimize the need to rework the installations and to result in permanent roads and paved areas that are without damage or deterioration when occupied by the Owner

    d. Delay installation of the final course of permanent asphalt concrete paving until immediately before Substantial Completion, unless it adversely effects the site and access road. Coordinate with weather conditions to avoid unsatisfactory results.

    e. Extend temporary paving in and around the construction area as necessary to accommodate delivery and storage of materials, equipment usage, administration and supervision.

    f. Contractor shall sweep and remove all construction debris from all roads outside of construction zone daily or more frequently as is required by weather conditions and/or to the satisfaction of the Owner.

D. Temporary Use of Permanent Roads and Paved Areas: Locate temporary roads and paved areas in same location as permanent roads and paved areas. Construct and maintain temporary roads and paved areas adequate for construction operations. Extend temporary roads and paved areas, within construction limits indicated, as necessary for construction operations.

1. Coordinate elevations of temporary roads and paved areas with permanent roads and paved areas.

2. Prepare subgrade and install subbase and base for temporary roads and paved areas according to Division 31 Section "Earth Moving."

3. Recondition base after temporary use, including removing contaminated material, regrading, proof rolling, compacting, and testing.

4. Delay installation of final course of permanent hot-mix asphalt pavement until immediately before Substantial Completion. Repair hot-mix asphalt base-course pavement before installation of final course according to Division 32 Section "Asphalt Paving."

5. Maintain access for fire-fighting equipment and access to fire hydrants.

6. Contractor shall sweep and remove all construction debris from all roads outside of construction zone daily to the satisfaction of the Owner and those having jurisdiction at the Contractor's expense.

E. Use of Existing Roads: Contractor shall comply with Owner's requirements for use of existing roads within Owner's property and outside Owner's property. For details refer to the following weblink: http://updc.uconn.edu/

F. Temporary Use of Owner's Property: Use of the Owner's grounds for access and laydown shall be as outlined in the Site Logistics Guidance Plan. The protection of trees, planting beds, lawns and soil structure shall be the primary focus.

1. Install tree and plant protection prior to the installation of other site fencing.

2. Limit vehicle traffic and staging to designated areas to prevent soil compaction. Employ surfaces that protect the underlying soil structure during construction

3. Maintain trees, lawn areas and planting beds during construction so green material is thriving at the conclusion of the project.

4. Submit restoration plan for these areas including decompaction, pruning, mowing, fertilizing, etc. prior to returning the campus grounds to the campus open space fabric.

G. Dewatering Facilities and Drains: Comply with requirements of authorities having jurisdiction. Maintain Project site, excavations, and construction free of water.

1. Dispose of rainwater in a lawful manner that will not result in flooding Project or adjoining properties or endanger permanent Work or temporary facilities.

2. Remove snow and ice to minimize accumulations within the construction site and shall not impact safe travel of University grounds outside the construction site.

a. Remove from the construction site, haul and dispose outside of Owner property. Contractor shall not dispose on any Owner property under any condition.

b. Approved de-icing products for all Owner campuses include:

(1) Rock salt treated with a pre-wetting agent containing a corrosion inhibitor with a minimum 30% magnesium chloride.

(2) Calcium chloride

(3) Magnesium chloride

c. Sand is not permitted

H. Lifts and Hoists: Provide facilities necessary for hoisting materials and personnel.

1. Truck cranes and similar devices used for hoisting materials are considered "tools and equipment" and not temporary facilities.

I. Temporary Elevator Use: In an existing building with a freight elevator, the Contractor will be permitted to use the elevator for freight service and transportation of construction personnel during the construction period with prior approval from the Owner. This elevator must also be available to the Owner at all times; coordinate usage with the Owner. Reliance on the existing elevators by the Contractor is solely at the Contractors own risk. At the end of construction, restore the elevator to its original condition; replace worn cables, guide shoes and similar items of limited life. Use of other elevators by the Contractor will not be permitted.

1. Do not load elevators beyond their rated weight capacity.

2. Provide protective coverings, barriers, devices, signs, or other procedures to protect elevator car and entrance doors and frame. If, despite such protection, elevators become damaged, engage elevator Installer to restore damaged work so no evidence remains of correction work. Return items that cannot be refinished in field to the shop, make required repairs and refinish entire unit, or provide new units as required.

J. Temporary Stairs: Until permanent stairs are available, provide temporary stairs where ladders are not adequate.

K. Existing Stair Usage: Use of Owner's existing emergency stairs will be permitted, provided stairs are cleaned and maintained in a condition acceptable to Owner. At Substantial Completion, restore stairs to condition existing before initial use.

1. Provide protective coverings, barriers, devices, signs, or other procedures to protect stairs and to maintain means of egress. If stairs become damaged, restore damaged areas so no evidence remains of correction work.

L. Temporary Use of Permanent Stairs: Use of new stairs for construction traffic will be permitted, provided stairs are protected and finishes restored to new condition at time of Substantial Completion.

3.04 SECURITY AND PROTECTION FACILITIES INSTALLATION

A. Protection of Existing Facilities: Protect existing vegetation, equipment, structures, utilities systems and other improvements at Project site and on adjacent properties, except those indicated to be removed or altered. Repair damage to existing facilities at no cost to the Owner

B. Environmental Protection: Provide protection, operate temporary facilities, and conduct construction as required to comply with environmental regulations and that minimize possible air, waterway, and subsoil contamination or pollution or other undesirable effects.

1. Comply with work restrictions specified in Division 01 Section "Summary."

C. Temporary Erosion and Sedimentation Control: Comply with the latest requirements of DEEP General Permit for the discharge of stormwater and dewatering wastewaters from construction activities or authorities having jurisdiction, whichever is more stringent and requirements specified in Division 31 Section "Site Clearing."

D. Temporary Erosion and Sedimentation Control: Provide measures to prevent soil erosion and discharge of soil-bearing water runoff and airborne dust to undisturbed areas and to adjacent properties and walkways, according to requirements of the latest DEEP General Permit for the discharge of stormwater and dewatering wastewaters from construction activities or authorities having jurisdiction, whichever is more stringent.

1. Verify that flows of water redirected from construction areas or generated by construction activity do not enter or cross tree- or plant- protection zones.

2. Inspect, repair, and maintain erosion and sedimentation-control measures during construction until permanent vegetation has been established.

3. Clean, repair, and restore adjoining properties and roads affected by erosion and sedimentation from Project site during the course of Project.

4. Remove erosion and sedimentation controls and restore and stabilize areas disturbed during removal.

E. Stormwater Control: Comply with requirements of authorities having jurisdiction. Provide barriers in and around excavations and subgrade construction to prevent flooding by runoff of stormwater from heavy rains.

F. Tree and Plant Protection: Comply with requirements specified in Division 01 Section "Temporary Tree and Plant Protection."

1. Install temporary fencing located as indicated or outside the drip line of trees to protect vegetation from damage from construction operations. Protect tree root systems from damage, flooding, and erosion.

G. Pest Control: Engage pest-control service to recommend practices to minimize attraction and harboring of rodents, roaches, and other pests and to perform

extermination and control procedures at regular intervals so Project will be free of pests and their residues at Substantial Completion. Perform control operations lawfully, using environmentally safe materials. With the exception of stinging insects.

H. Site Enclosure Fence: Prior to commencing any work or mobilization, furnish and install site enclosure fence in a manner that will prevent people and animals from easily entering the site except by entrance gates. All fencing to have dark green reinforced scrim sheeting.

1. Extent of Fence: As required to enclose entire Project site or portion determined sufficient to accommodate construction operations or as indicated on Drawings and noted in the approved Site Logistics Plan.

a. Prior to fence installation, a fence system submittal shall be submitted and approved by the Owner. A pre-installation conference shall be held with all sub-contractors and workers responsible for supplying and installing the fence to go over the plan and the expectations.

b. All fence material, fence fabric, posts, panels, feet, scrim and banners shall all be on site prior to commencing installation.

c. Site fence shall be installed in accordance with the following

(1) Fence Posts and the top and bottom rail shall be installed and cut to appropriate height/length.

(2) Chain link fence shall be installed. Fence posts shall not exceed the fabric installation by more than 50 feet.

(3) Reinforced scrim shall be installed. Chain link fence shall not exceed the scrim installation by more than 50 feet. Scrim shall be installed flush with the top of the fence so that the top salvage knuckle is not visible. Scrim shall then be stretched tight to cover the entire height of the fence. Horizontal joints shall not be permitted. The scrim shall be taught and free of wrinkles. Vertical scrim joints shall be overlapped to give the appearance of continuous piece of scrim.

(4) Contractor to install owner provided decorative banners on the exterior side of the site enclosure fencing as directed by Owner.

2. Phasing of work: As the work progresses, depending on safety and limitation conditions, the Contractor shall relocate or reduce the site fencing as required at no additional cost to the Owner.

I. Security Enclosure and Lockup: Install enclosure around partially completed areas of construction. Coordinate with Owner's Fire Marshall and install Owner provided lockable pad locks for entrances to prevent unauthorized entrance, vandalism, theft, and similar violations of security. Construction gates shall be closed at all times during the day to prohibit the general public from entering the site. Ensure no safety

cones are left outside of the fence enclosure after deliveries. Lock entrances at end of each work day.

J. Barricades, Warning Signs, and Lights: Comply with requirements of authorities having jurisdiction and the Owner for erecting structurally adequate barricades, including warning signs and lighting.

K. Temporary Egress: Maintain temporary egress from existing occupied facilities at all times and as required by authorities having jurisdiction.

L. Covered Walkway: Erect protective, covered walkway for passage of individuals through or adjacent to Project site. Coordinate with entrance gates, other facilities, and obstructions. Comply with regulations of authorities having jurisdiction and requirements indicated on Drawings.

1. Construct covered walkways using scaffold or shoring framing.

2. Provide overhead decking, protective enclosure walls, handrails, barricades, warning signs, exit signs, lights, safe and well-drained walkways, and similar provisions for protection and safe passage.

3. Where required by OSHA regulations provide temporary lighting under covered walkways to satisfy requirements.

4. Covered walkways shall maintain a minimum clear height of 8ft above walking surface, and shall be designed to support all imposed loads and a minimum live load of 150 psf.

M. Temporary Enclosures: Provide temporary enclosures for protection of construction, in progress and completed, from exposure, foul weather, other construction operations, and similar activities. Provide temporary weathertight enclosure for building exterior.

1. Where heating or cooling is needed and permanent enclosure is incomplete, insulate temporary enclosures.

N. Temporary Partitions: Provide floor-to-ceiling dustproof partitions to limit dust and dirt migration and to separate areas occupied by Owner from fumes and noise.

1. Construct dustproof partitions with gypsum wallboard with joints taped on occupied side, and fire-retardant-treated plywood on construction operations side.

2. Construct dustproof partitions with two layers of 6-mil polyethylene sheet on each side. Cover floor with two layers of 6-mil polyethylene sheet, extending sheets 18 inches up the sidewalls. Overlap and tape full length of joints. Cover floor with fire-retardant-treated plywood.

a. Construct vestibule and airlock at each entrance through temporary partition with not less than 48 inches between doors. Maintain water-dampened foot mats in vestibule.

3. Where fire-resistance-rated temporary partitions are indicated or are required by authorities having jurisdiction, construct partitions according to the rated assemblies.

4. Insulate partitions to control noise transmission to occupied areas.

5. Seal joints and perimeter. Equip partitions with gasketed dustproof doors and security locks where openings are required.

6. Protect air-handling equipment.

7. Provide walk-off mats at each entrance through temporary partition.

O. Temporary Fire Protection: Install and maintain temporary fire-protection facilities of types needed to protect against reasonably predictable and controllable fire losses. Comply with NFPA 241; manage fire-prevention program.

1. Prohibit smoking in construction areas.

2. Supervise welding operations, combustion-type temporary heating units, and similar sources of fire ignition according to requirements of authorities having jurisdiction.

3. Develop and supervise an overall fire-prevention and -protection program for personnel at Project site. Review needs with Owner's fire department and establish procedures to be followed. Instruct personnel in methods and procedures. Post warnings and information.

4. Provide temporary standpipes and hoses for fire protection. Hang hoses with a warning sign stating that hoses are for fire-protection purposes only and are not to be removed. Match hose size with outlet size and equip with suitable nozzles.

P. Temporary Lighting and Security Phones: Installation of temporary fencing, temporary egresses, temporary enclosures, covered walkways and the like shall take into consideration the affects to existing lighting, cameras and emergency code blue phones. Relocate any existing lights and/or code blue phones in order to maintain sufficient lighting and line of site of blue phones.

3.05 MOISTURE AND MOLD CONTROL

A. Contractor's Moisture-Protection Plan: Avoid trapping water in finished work. Document visible signs of mold that may appear during construction. Remove any materials that appear to have been affected by moisture as determined by testing and the Owner.

B. Exposed Construction Phase: Before installation of weather barriers, when materials are subject to wetting and exposure and to airborne mold spores, protect as follows:

1. Protect porous materials from water damage.

2. Protect stored and installed material from flowing or standing water.

3. Keep porous and organic materials from coming into prolonged contact with concrete.

4. Remove standing water from decks.

5. Keep deck openings covered or dammed.

C. Partially Enclosed Construction Phase: After installation of weather barriers but before full enclosure and conditioning of building, when installed materials are still subject to infiltration of moisture and ambient mold spores, protect as follows:

1. Do not load or install drywall or other porous materials or components, or items with high organic content, into partially enclosed building.

2. Keep interior spaces reasonably clean and protected from water damage.

3. Periodically collect and remove waste containing cellulose or other organic matter.

4. Discard or replace water-damaged material.

5. Do not install material that is wet.

6. Discard, replace, or clean stored or installed material that begins to grow mold.

7. Perform work in a sequence that allows any wet materials adequate time to dry before enclosing the material in drywall or other interior finishes.

D. Controlled Construction Phase of Construction: After completing and sealing of the building enclosure but prior to the full operation of permanent HVAC systems, maintain as follows:

1. Control moisture and humidity inside building by maintaining effective dry-in conditions.

2. Use permanent HVAC system to control humidity.

3. Comply with manufacturer's written instructions for temperature, relative humidity, and exposure to water limits.

a. Hygroscopic materials that may support mold growth, including wood and gypsum-based products, that become wet during the course of construction and remain wet for 48 hours are considered defective.

b. Measure moisture content of materials that have been exposed to moisture during construction operations or after installation. Record readings beginning at time of exposure and continuing daily for 48

hours. Identify materials containing moisture levels higher than allowed. Report findings in writing to Architect.

c. Remove materials that cannot be completely restored to their manufactured moisture level within 48 hours.

3.06 TRAFFIC CONTROL

A. Due to the large volume of pedestrian and vehicular traffic within the campuses, it shall be the responsibility of the Contractor to provide traffic and pedestrian accessibility to all areas of the campus as applicable.

B. The Contractor shall comply with Connecticut Regulation13b-17-28, Safety to Traffic, which requires that "When portions of the traveled way are made dangerous for the movement of vehicles or pedestrians, a sufficient number of uniformed police officers, flagmen, or traffic men, shall be employed by the permittee to direct traffic safely through the area."

C. The requirement to maintain pedestrian and vehicular traffic is further defined in the Connecticut Department of Transportation Specifications Section 9.71, Form 814, which requirements are incorporated herein by reference.

D. The Contractor is required to contact the Owner's Police Department to determine jurisdiction. Thereafter Contractor may contact the Town of Mansfield Police Department or other state or private sources directly to obtain the necessary manpower to comply with these regulations. The Owner shall be informed by the Contractor of his traffic control procedures prior to the commencement of construction. Any traffic control performed other than by Contractor self-performance shall be considered subcontracted.

E. At all entrance gates a flag person shall be employed to coordinate project deliveries and manage pedestrian as well as vehicular traffic. This person shall also be responsible for closing the site access gates after each delivery.

3.07 PROJECT IDENTIFICATION AND SIGNS

A. Project Identification Signs:

1. Decorative banners for the site enclosure fencing shall be provided by the Owner and installed by the Contractor. Such banners shall be installed immediately following scrim installation. Utilize ties used for scrim.

2. Decorative scrim for the site enclosure fencing shall be provided by the Owner and installed by the Contractor. Non-decorative scrim shall be supplied and installed by the Contractor.

3. Construction Project Sign shall be provided and installed by the Contractor and shall simultaneously be installed with the installation of the temporary fencing. See details on the size and typical design layout of the sign and installation requirements located on the Owner's website: http://updc.uconn.edu.

B. Temporary Signs: Prepare signs to provide directional and safety information to construction personnel and visitors. Install signs where indicated to inform the public and persons seeking entrance to the Project. Support on posts or framing of preservative treated wood or steel. Do not permit installation of unauthorized signs, except those required by law.

1. All detour signs required by CTDOT shall be submitted to and approved by the Owner. The Owner reserves the right to adjust size, color and placement of signs.

C. Other directional and detour Signs: Other directional and/or detour signs not required by the CTDOT shall adhere to project specific specification requirements and be submitted to the Owner for approval.

3.08 OPERATION, TERMINATION, AND REMOVAL

A. Supervision: Enforce strict discipline in use of temporary facilities. To minimize waste and abuse, limit availability of temporary facilities to essential and intended uses directly related to the project.

B. Maintenance: Maintain facilities in good operating condition until removal.

1. Maintain operation of temporary enclosures, heating, cooling, humidity control, ventilation, and similar facilities on a 24-hour basis where required to achieve indicated results and to avoid possibility of damage.

2. Prevent water filled piping from freezing.

3. Maintain markers for underground lines. Protect from damage during excavation operations.

C. Temporary Facility Changeover: Do not change over from using temporary security and protection facilities to permanent facilities until Substantial Completion has been formally recognized.

D. Termination and Removal: Unless the Owner requests that it be maintained longer, remove immediately each temporary facility when need for its service has ended, when it has been replaced by authorized use of a permanent facility, or no later than Substantial Completion. Complete or, if necessary, restore permanent construction that may have been delayed because of interference with temporary facility. Repair damaged Work, clean exposed surfaces, and replace construction that cannot be satisfactorily repaired.

1. Materials and facilities that constitute temporary facilities are property of Contractor. Owner reserves right to take possession of Project identification signs.

2. Remove temporary roads and paved areas not intended for or acceptable for integration into permanent construction immediately when such temporary surface is no longer required.

3. Where area is intended for landscape development, remove soil and aggregate fill that do not comply with requirements for fill or subsoil. Remove materials contaminated with road oil, asphalt and other petrochemical compounds, and other substances that do not meet the material component requirements specified. Repair or replace street paving, curbs, and sidewalks at temporary entrances, as required by authorities having jurisdiction.

4. At Substantial Completion, repair, renovate, and clean permanent facilities used during construction period. Comply with final cleaning requirements specified in Division 01 Section "Closeout Procedures."

    a. Replace air filters and clean inside of ductwork and housings.

    b. Replace significantly worn parts and parts that have been subject to unusual operating conditions.

    c. Replace lamps that are burned out or noticeably dimmed by substantial hours of use.

    d. Restore all existing facilities and grounds used during construction to specified requirement or to original condition. Restoration shall include but not limited to:

        (1) Removal of compacted grounds area due to equipment and vehicular access and movement to and within the site work area. Adding of compost and other nutrients to the soil to meet the Project standards for lawn/turf establishment.

        (2) Pruning and mulching of existing planting beds that are within the construction fence area. Restore grass areas immediately surrounding and within the Construction fence area to blend with other surrounding plantings and grass areas maintained by the Owner. Should there be no Project standards for lawn/turf establishment, Contractor shall follow the Owner’s requirements for turf restoration.

    e. Remove completely from ground surfaces all “call before you dig” and other pavement markings made in support of the project. Covering over of markings is not acceptable.

END OF SECTION

SECTION 01-5640

TREE PROTECTION AND PRESERVATION

PART 1 – GENERAL

1.01 RELATED DOCUMENTS

A. Drawings and general provisions of the Contract, including General and Supplementary Conditions and other Division 01 Specification Sections, apply to this Section.

1.02 SUMMARY

A. This Section includes the protection and stress reduction of existing trees and vegetation that interfere with, or are affected by, execution of the Work, whether temporary or permanent. Work is to be coordinated with the contract documents which shall include a tree preservation plan authored by a certified arborist.

B. The following specifications apply to work of the related to protection and stress reduction measures and coordination and oversight of the tree preservation Plan by the Owner. This work includes but is not limited to the following:

1. Coordination of Temporary Tree and Plant Protection
2. Selective tree removals for “Removal By Arborist” (RBA) (Contract Arborist) within Tree Protection Areas (TPAs)
3. Root Pruning
4. Temporary Site and Tree Protection Fencing and temporary sign installation referenced in Section 01-5000 Temporary Facilities and Controls
5. Composted Mulching
6. Liquid subsurface fertilization
7. Temporary Limb Guying or Clearance Pruning for construction access
8. Seasonal Supplemental Watering
9. Monitoring and Treatment of Tree Health
10. Supersonic Air Tool (SSAT) and Hand Excavation within the Critical Root Zones (CRZs)

1.03 DEFINITIONS

A. Certified Arborist: Credential of an individual arborist issued and administered by the International Society of Arboriculture. This credential must be current and valid to qualify to use the copyrighted designation of “Certified Arborist”. Refer to www.isa-arbor.com for additional information.

B. Contract Arborist: Arboricultural firm contracted to implement the approved tree preservation plans on site. All crews’ conduction arboricultural operations on site shall consist of at least one Certified Arborist who directly oversees all work by that crew. Arboricultural operations include, but are not limited to, pruning, tree protection device installation and maintenance (fence, matting, etc.), root pruning, air tool root excavation/exploration (SSAT), soil care activities, soil testing, mulch application, tree inspections, pesticide/chemical applications and tree removal. Special qualifications submittal is required for review and approval below. Contract Arborist will be sub-contracted by the general contractor.

C. Tree Protection Area (TPA): Area indicated on Drawings surrounding individual trees or groups of trees to be protected during construction.

D. Supersonic Airtool (SSAT): Hand held tool designed to focus highly compressed air (90-125 psi) provided from a large air compressor (185-375 cfm) at speeds close to 1400 mph at the tip of the tool. Widely used by arboricultural firms and consultants for multiple purposes including but not limited to: root collar investigation, CRZ investigation, root pruning (especially large roots > 1.5” diameter or were existing underground cables or conduits are located, radial mulching and restoration of compacted soils, excavation for utilities within protected CRZs to minimize root damage from constriction.

E. Tree Removal by Arborist: Action whereby the Contract Arborist removes trees designated for “Removal by Arborist” selected from inside the TPAs. Trees shall be taken down by hand sectionally, or directionally felled to minimize damage to adjacent tree canopies, root systems, or adjacent structures. Work shall be completed by a qualified contract arborist.

F. Crown Pruning: Action by the Contract Arborist of pruning specific tree limbs to improve tree health, reduce hazard, and / or provide construction clearance.

G. Supportive Cabling: Installation of supportive cabling for designated tree branches due to weak branch attachments.

H. Root Pruning: Action indicated on Drawings to provide a more suitable cut for protected tree roots to minimize ripped or torn roots during excavations and grading with standard construction equipment. Various methods may be used.

I. Mulching of Trees: Application of a wood mulch product to areas surrounding designated trees. Mulch increases moisture-holding capacity, helps mitigate soil compaction, and increases needed soil organic composition.

J. Soil Amendments: Various product components applied to existing soil environment of protected trees, as indicated on Plan Notes.

K. Tree Growth Regulator (*Paclobutrazol)*: Products applied to designated trees used to regulate plant growth in such a way as to restrict canopy growth and free stored or produced energy for other uses in the tree. For highly impacted trees, more energy may be available for fibrous root growth (to combat root loss), thicker darker leaves (allowing for increased photosynthesis, and increased drought tolerance), and pest tolerance (often an issue with construction stressed trees); among other potential benefits.

L. Limits of Disturbance (LOD) (also called Limits of Construction): Specific outer limits of all construction activities for the entire project.

M. DBH (Diameter at Breast Height): Tree trunk diameter measured at 4.5 feet above grade.

1.04 SUBMITTALS

A. The Contract Arborist shall provide submittals as follows:

1. Product Data: For each type of product indicated

2. Certification: For each phase, the Contract Arborist shall certify for each tree designated to remain has been protected during construction according to recognized standards and that trees were promptly and properly treated and repaired when damaged.

3. Qualification Data: For Contract Arborist Firm Qualifications, submit firm and individual qualifications as follows:

a. Submit a minimum of two resumes and detailed qualifications from staff or team individuals assigned to this project as detailed under Quality Assurance below. Due to the complexity of this project, standard arboricultural experience may not qualify.

b. Provide references for above from a minimum of three commercial, non-governmental or governmental projects for whom similar tree preservation programs have been successfully implemented. Include the following information:

(1) Project Name, size and scope

(2) Number and species of trees involved

(3) Relevant photos or aerials

(4) Scope of services provided

(5) Name and contact for project owner, designer, or contractor.

4. Pedestrian / Property Protection Plan: Contract Arborist to submit a written plan describing all protective measures proposed to be used. Protection measures shall be required for all on-site tree care activities including but not

limited to Supersonic Airtool excavation, root pruning, canopy pruning, etc. to minimize potential impact to pedestrians and property.

5. Maintenance Prescription: Contract Arborist shall submit for care and protection of trees as a result of construction, changes in weather patterns or events, and response in health from individual trees during and after completing the Work.

6. Soil Samples: Submit soil sample for analysis during site work phase of this project. Take representative soil samples from all areas of protected trees (landscape areas and street tree planting pits). Samples and procedures per local cooperative extension shall be followed. Forward reports to Engineer and Owner.

7. Soil Amendments: Contract Arborist shall submit specific fertilizer formulations, application rates and methods for review by Project Arborist. All fertilization and soil amendments shall be in conformance with soil test results.

8. Site Documentation: Submit weekly reports to the Owner containing complete documentation of all tree impacts and tree preservation activities including but not limited to: root pruning, tree protection fencing, excavation within critical root zones, tree fertilization or other treatments, etc. Documentation shall include tree numbers of trees impacted and / or treated. Complete daily photographic record is also required.

9. Existing Conditions: Documentation of existing trees and plantings indicated to remain, which establishes preconstruction conditions that might be misconstrued as damaged caused by construction activities.

    a. Use sufficiently detailed photographs or videotape.

    b. Include plans and notations to indicate specific wounds and damage conditions of each tree or other plants designated to remain.

10. Tree and shrub removal of additional plants not under base contract will require a “request to remove plantings” form to be submitted to the Owner for approval prior to starting the removal.

1.05 QUALITY ASSURANCE

A. Certified Arborist (individual) Qualifications: An arborist certified by the International Society of Arboriculture (ISA) and licensed in the jurisdiction where project is located. All work performed by Contract Arborist including any oversight and documentation work, shall be performed or directly supervised by at least one on-site arborist with these minimum qualifications.

B. Contract Arborist Firm Qualifications:

1. Contract Arborist Firm shall comply with the following:

a. Established business with documented experience of at least five years.

b. Experience working on a minimum of three commercial, nongovernmental or governmental projects where similar tree preservation programs have been successfully implemented.

c. Properly licensed and insured to perform arboricultural work in the jurisdiction where the project is located.

2. Provide names of each individual to comply with the following:

a. Minimum BS degrees in forestry, arboriculture, or related field and Certification in ISA.

b. Resumes should reflect combined 10 years full time experience on similar tree preservation projects.

c. Provide individual(s) names, certifications, and each anticipated role in this project. “Role(s)” shall be defined as one or more of the following:

(1) Project Manager

(2) Technical Oversight

(3) Field Arborist / Technician

3. For each staff member, list a minimum of three construction projects and a minimum three years’ experience in the following technical applications:

a. Soil amendment prescriptions and applications

b. Supersonic Airtool Excavations for underground utilities exceeding 24” depth.

c. Root Protection Matting or similar applications

C. Part of this work to extent referenced shall include but not be limited to the following:

1. ANSI A300 Standard Practices for Trees, Shrubs, and Other Woody Plant Maintenance.

2. Part 1-2001, Tree Pruning;

3. Part 2-3004, Fertilization;

4. Part 3-2000, Cabling, Bracing, Guying of Established Trees;

5. Part 4-2002, Lightning Protection Systems;

6. ANSI Z133.1 – 1994 and most recent updates, Tree Care Operations – Safety Requirements

D. Fertilizer and pesticide will be applied in strict accordance with the manufacturers label instructions and applicable federal, state, and local requirements. Fertilizer, soil conditioners, and pesticide applications must be approved by the owner prior to application. Safety Data Sheets (SDS) will be available for fertilizers and pesticides in the Contract Arborists' possession while on the site.

E. Pre-Construction Meeting: Conduct meeting at the project site prior to commencement of construction related activities.

1. Contract Arborist, Project Arborist, Project Design Team, Owner and Contractors shall attend.

2. Review methods and procedures related to tree protection and preservation including, but not limited to, the following:

a. Site Logistics Plan

b. Construction schedule – verify availability of material, personnel, and equipment needed to make progress and avoid delays.

c. Enforcement of requirements for tree protection areas.

d. Responsibilities of all parties, including coordination, access and timing requirements.

e. Field quality control

1.06 PROJECT CONDITIONS

A. The following practices are prohibited within all tree protection areas except as specifically indicated herein:

1. Storage or stockpiling of construction materials, chemicals, debris, or excavation materials.

2. Parking vehicles, trailers or equipment.

3. Foot traffic.

4. Erection of sheds or structures.

5. Impoundment or discharge of water.

6. Excavation or other hand or mechanical digging unless otherwise indicated.

7. Attachment of signs to or wrapping materials around trees or plants unless otherwise indicated.

B. Do not direct vehicle or equipment exhaust toward protection zones.

C. Prohibit heat sources, flames, ignition sources, and smoking within or near protection zones and organic mulch.

PART 2 – PRODUCTS

2.01 MATERIALS

A. Temporary Tree Protection Fence

1. Chain-Link Fence: Follow requirements on fencing outlined in 01-5000 Temporary Facilities and in 01-1000 Summary.

B. Wood Chip Mulch

1. Double ground hardwood, aged a minimum 6 months from production, free from deleterious materials. Green chips or mulch not aged at least 6 months shall not be used. No walnut mulch shall be used. Submittal shall include original material source(s), number and type of grindings / chippings, duration of aging, timing of turning / aeration.

C. Hardwood Destruction Borer / Beetle Control: Bifenthrin, such as Onyx or equivalent. Applied per label.

D. Tree Growth Regulator *(Paclobutrazol)*

1. Paclobutrazol is a compound used to regulate plant growth in such a way as to restrict canopy growth and free stored or produced energy for other uses in the tree. For highly impacted trees, this means more energy may be made available for fibrous root growth (to combat root loss), thicker darker leaves (allowing for increased photosynthesis, and increased drought tolerance), and pest suppression (often an issue with construction stressed trees); among countless other potential benefits. Trade name Cambistat® or equal.

E. Soil Care/Soil Amendments

1. Fertilizer and soil amendment selection shall be based upon soil test results and recommendations.

PART 3 – EXECUTION

3.01 TREE REMOVAL

A. See Section on Demolition for specifics on tree shrub or hedge removal.

3.02 TREE PROTECTION AND STRESS REDUCTION MEASURES

A. General

1. Installation/implementation of the following measures shall be performed in the field by and ISA Certified Arborist as provided by the Contract Arborist

2. All work, substitutions and /or modifications shall be subject to review and approval by the Owner.

3. All work shall conform to applicable federal, state and local regulations and industry standards.

4. The Contract Arborist shall be responsible for all items in this section.

B. Coordination of Tree preservation plan. The work of the Contract Arborist coordination to include but not limited to the following:

1. Existing underground utility marker conflicts brought to the attention of the Contractor for resolution as well uncovered underground utilities as a result of work.

2. Coordinate necessary survey layout of proposed construction elements in order to provide accurate locations for tree protection measures.

3. Layout location of designated tree protection based upon proposed construction and methods of construction for that area.

4. Site walk with Owner and Site Superintendent to verify location of all tree protection measures prior to execution.

5. Notify Site Superintendent and Owner if construction adjacent to tree protection does not appear to follow specifications or prior agreement or conflicts with tree protection seem eminent.

6. Coordinate with Site Superintendent and Owner, for access of deliveries, crews, equipment, start up, and cleanup of each item of work.

7. Provide “as built” of any change to location of tree protection.

8. Attend progress meetings as requested.

9. Provide submittals as required.

10. Notify Superintendent and Owner of any breach or damage to tree protection requiring attention.

C. Pruning and Supportive Cabling

1. Specific canopy pruning for tree health, risk reduction, and construction clearance per Contract documents

2. Size, health, species, and impact from proposed construction will be taken into consideration in determining pruning type for each designated tree. Risk Reduction Pruning will remove dead, dying, and declining limbs 2” diameter

and larger. No interior green branching including sprouts will be removed unless approved by Contract Arborist.

3. Contractor, Contract Arborist, and Owner shall meet at site to determine overhead clearance conflicts between trees and construction equipment/activities to prevent breakage, impacts, or aesthetic concerns. All work shall conform to ANSI A-300 arboriculture standards. An aerial assessment shall be made for all trees climbed to report any structural weakness of concern to the Owner.

4. Prior to climbing any tree a risk assessment will be performed using visual, sounding, or basic drilling as needed by the Contract Arborist. Trees deemed high risk should not be climbed; alternate methods should be used and the tree reported to the Owner immediately.

5. Supportive Cabling of weak unions may be recommended by the Contract Arborist if the need is discovered during pruning operations. ANSI Standards apply. Cabling may be included only if submitted to the Engineer and approved by the Owner.

D. Root Prune

1. Purpose of the root pruning is to provide a more suitable cut so as to not rip or tear roots during excavations and grading with standard construction equipment. The exact location and depth along the LOD or edge of utility excavation will be determined during the layout by a Certified Arborist.

2. Root Pruning for urban sites with specimen trees or for transplanting requires the use of SSAT excavation for hand pruning. Refer to SSAT specifications in the section

3. Sufficient moisture is necessary for reducing the level of dust, increase work efficiency, and provide a hospitable environment of the tree roots and pedestrians.

4. At a pre-work site inspection by the Contract Arborist more than 72 hours in advance of work start, subsurface probing to 24-36” with a tile probe or similar method will determine if sufficient soil moisture exists. If sufficient moisture is not found, immediate coordination with the site managers shall be made to irrigate the proposed work areas. Methodology may be soaker hose, sprinklers, soaker cans with small drilled holes to release water slowly or other methods. A second follow up inspection shall be made to determine final sufficiency to begin.

5. All root pruning operations shall be performed by the Contract Arborist and directed in the field by and ISA Certified Arborist with documented experience in similar SSAT excavation and root pruning.

E. Temporary Tree Protection Fence

1. Type and placement of fence to be designated on the Preservation Plans and Details.

2. Attach tree protection area signs at30’ feet spacing, facing construction activity. For fence lower than 6’ feet in height, attach owner provided flagging as directed. Consult with the Owner for sign content.

3. Tree protection area signs shall be high visibility and all weather to last duration of the project / phase.

4. Install tree protection after root pruning if shown, and prior to all other mobilization such as demolition, clearing and/or excavation.

5. Install tree protection at 6” – 12” outside (construction side) of the Root Prune line or within the Root Prune Trench.

6. Silt fence will be outside (construction side) the tree protection fence, unless super silt fence is used in lieu of tree protection. Trenchless installation method shall be employed per Detail if Root Protection Matting is designated.

7. Exact placement of fence will be determined in walk-through with Contractor, Project Arborist, Contract Arborist, Engineer, and Owner.

8. Sequencing of the tree protection fence will be determined during the initial site walk. In any case, no construction activities shall occur in each phase or section until approved protection is installed.

F. Hand Excavation within Tree Protection Areas

1. For excavation within the critical root zone areas of trees to remain, the intent is to minimize tree and root damage from excavation activities.

2. Excavation shall be performed using SSAT, hand tools (shovels, etc.), or other approved non-damaging method. Roots shall not be damaged by the excavation except for approved root pruning.

3. Refer to “Supersonic Airtool Excavation” and “Construction Oversight by Arborist” specifications in this section for additional requirements.

4. All work shall be directly supervised by Contract Arborist in collaboration with the Owner’s trades and subcontractors.

5. RPM (Root Protection Matting) shall be installed along trench sides to allow for temporary soil stockpile and access.

6. Excavate along the edge of the proposed trench closest to the trees to be protected as shown on the plans. Roots shall be uncovered and care taken to avoid damage to roots and bark.

7. Contract Arborist shall prune the exposed roots. Excavation shall not extend beyond the line where toots were pruned.

8. Contractor may proceed with conventional excavation methods or with hand excavation methods if clearance to the tree is inadequate for equipment access.

9. No roots shall be cut by the contractor.

G. Supersonic Airtool (SSAT) Excavation

1. Refer to “Hand Excavation within Tree Protection Areas” specification in this section for additional requirements

2. At a minimum, all SSAT work shall include the use of a barrier system such as temporary walls or tents to protect property and pedestrians from flying debris.

3. Excavate along the edge of the proposed trench closest to the trees to be protected as shown on the plans. Roots shall be uncovered and care taken to avoid damage to roots and bark.

4. Excavation shall proceed per the “Hand Excavation within Tree Protection Areas” specification in this section.

H. Wood Chip Mulch

1. Mulching for the duration of construction for protection and stress reduction. Mulching will increase moisture-holding capacity, minimize soil compaction, and increase needed organic composition. Mulch shall meet the specifications and shall be three (3) inches in depth.

2. For individual trees designated on the TPAK within the TPS or curvilinear TPA install mulch to a radius equal to trunk diameter inches equated to mulch ring diameter in feet (24” inch trunk diameter = 24’ feet diameter mulch ring). Where planting pit areas are restricted by hardscape, mulch the greatest area possible.

3. For privately owned trees, any installation is contingent upon receipt of owner’s permission. Owner may decline.

4. For linear TPAs along LOD Install mulch strips a minimum 10’ feet wide the length of critical root zones along the outside of the LOD/Root Prune line (just inside the Tree Protection Zone) for designated significant trees impacted by proposed construction.

5. Motorized equipment shall not enter the Tree Protection Area (TPA) unless specifically approved by the Project Arborist and specific conditions met (RPM, AlturnaMATS, etc.). Any such motorized equipment shall be operated by a certified arborist while inside the TPA.

6. Do not allow mulch to contact trunk / roof flare.

7. Mulch depth shall be 3” inches.

I. Tree Growth Regulator *(Paclobutrazol)*

1. Paclobutrazol is a compound used to regulate plant growth in such a way as to restrict canopy growth and free stored or produced energy for other uses in the tree. For highly impacted trees, this means more energy may be made available for fibrous root growth (to combat root loss), thicker darker leaves allowing for increased photosynthesis, and increased drought tolerance.

2. Specific methods and dosages are contained on the label and are determined by size and species, and applied by a state licensed pesticide applicator. Designated trees are shown on the Tree Protection Action Key (TPAK).

J. Supplemental Watering

1. This action is for high impact trees of significance during seasonal drought times of project construction. Based upon the number and size of trees various strategies can be considered to maintain adequate soil moisture during these times. These strategies may include but are not limited to the following:

   a. Fire hydrant connection battery powered timer and drip irrigation hose/tubing;

   b. Water tank trunk and hand applied as directed;

   c. Temporary above grade poly tank with battery-powered timers for drip or soaker hoses at each TPA.

   d. 30-50 gallon watering cans with 6 – 8 drilled holes in bottom to allow slow seeping of water; spacing and rotation to reach desired gallons. Equivalent means of affectively watering trees as approved by Engineer or Project Arborist.

2. Trees requiring this treatment are indicated in the TPAK. Other trees will not receive this treatment.

3. Drought times shall be defined as:

   a. Periods during the growing season of two weeks or longer, where daytime high temperatures reach 80 degrees Fahrenheit or higher and less than ¾" rainfall are recorded per week. Or,

   b. Periods during the growing season designated as "abnormally dry" or "drought" of any severity, by the U.S. Drought Monitor: http://droughtmonitor.unl.edu/ Or,

   c. Any period of extraordinary circumstance, as determined by the project arborist or engineer

4. A prescription for the number of gallons and strategy for watering designated trees will be developed. Large mature trees with impacts to root systems

require as much as 100 – 250 gallons per week during 90 degree days during summer drought times.

5. Periodic inspections by an ISA Certified Arborist (provided by the Contract Arborist) as this time are critical. Depth of moisture in soils shall be determined by soil sample tube or other exploratory means.

6. Minimum watering shall be considered to be 6 applications per growing season typically July through October with the exact timing and duration to be determined by the ISA Arborist.

K. Overhead Clearance

1. Trees to remain shall be assessed prior to construction for overhead clearance for construction activities. Contract Arborist shall recommend either canopy pruning, temporary guying/tying of select limbs, or alternative construction methods.

2. Pruning for clearance shall not remove branches above 12' feet or over 6" inches diameter

3. All pruning proposed by the Contractor and / or Contract Arborist shall first be reviewed and approved by the Owner and Project Arborist.

4. Equipment exhaust should be directed away from trees as much as possible. Stationary equipment shall not exhaust directly under or toward trees.

5. Contractor shall use appropriate equipment near trees to ensure that trees are not damaged by construction. Contractor shall provide any specialized equipment needed at no additional cost to the owner.

6. Any pruning shall also conform to the pruning specifications in this section.

L. Soil Tests and Soil Care/Fertilization

1. Initial soil testing within tree protection areas is required. Conduct individual soil tests for separate tree protection areas (small adjacent areas may be tested together). Soil test shall be a representative sample from each area. Soil testing shall include a texture analysis (sand, silt, and clay percentages), soluble salts, and sodium tests.

2. Treatments to the tree protection areas for specified trees (see TPAK) shall be based on the results of the soil analysis. Fertilization should be consistent with the recommendations of the ANSI A-300 (Part 2) Tree, Shrub, and Other Woody Plant Maintenance – Standard Practices (Fertilization) 2004, except as described herein.

3. Application rates shall not exceed a rate of 1 pound of actual nitrogen per 1,000 square feet annually. Fertilizer used should include humic acids, soluble seaweed extracts and soil biological inoculants (mycorrhizae, etc.).

4. Applications to confined areas (i.e. street tree planting pits) should be made by soil injection. In areas where adequate application rates cannot be achieved, injection should be made to the point of refusal.

3.03 FIELD QUALITY CONTROL AND MONITORING

A. Tree Condition Monitoring

1. An ISA Certified Arborist (provided by the Contract Arborist) shall perform monitoring twice per month year round to monitor insects, disease, soil moisture levels, weather, and health changes on all trees designated on Tree Protection Action Key.

2. The monitoring will include a report that details problematic areas that have been addressed, treatments provided to reduce the problem, and anticipated treatments forecast for 30 days. This report will be forwarded to the Project Arborist, Engineer and Owner for documentation.

3. Any treatments recommended by the Contract Arborist not already included in the project scope shall be noted in the reports for review by the Project Arborist, Engineer and Owner. No additional work is to be performed unless approved in writing by the Owner.

B. Construction Oversight by Contract Arborist

1. Any work within CRZs of retained trees shall be directly supervised by the Contract Arborist.

2. If roots are encountered during excavation, work shall progress as directed by the Contract Arborist. Contract Arborist, in coordination with the construction and design teams, shall determine appropriate means and methods to address the roots. Options may include, but not be limited to, severing the roots, hand or SSAT excavation. Contractor shall not cut roots.

3. Refer to “Hand Excavation within Tree Protection Areas” specification in the section.

4. All work shall be documented thoroughly, including photo documentation. Refer to site documentation submittal requirements.

3.04 CONTRACTOR DAMAGE AND PENALTIES

A. Remedial Measures

1. Any damage caused to the trees by the work of this contract through negligence by the contractor shall be immediately remedied by the contractor. Contractor shall be responsible for any associated costs.

2. Remedial work may include pruning, cabling, or any other measures up to and including removal and replacement, as determined by the Project Arborist and Engineer.

3. Remedial work shall be performed by the Contract Arborist, as approved by the Project Arborist and Engineer.

4. All required remedial work shall be performed to the satisfaction of the Project Arborist and Engineer, at no additional cost to the owner.

B. Tree Replacement

1. If damage to any tree is severe, because of negligence by the contractor as determined by the Project Arborist and Engineer, it shall be replaced with a new tree of equal size caliper and species as that of the damaged tree.

2. If a replacement tree of equal size and caliper is not possible as determined by the Project Arborist and Engineer, it shall be replaced on and inch by inch basis with new trees of a minimum caliper size of 2”-3”.

3. Replacement trees shall be supplied and installed at no additional costs to the owner, including all incidental costs including the costs of inspection of the tree at the nursery and any other incidental costs associated with tree replacement.

END OF SECTION

SECTION 01-5719

TEMPORARY ENVIRONMENTAL CONTROLS

PART 1 – GENERAL

1.01 DESCRIPTION

A. This section specifies the control of environmental pollution and damage that the Contractor must consider for air, water, and land resources. It includes management of visual aesthetics, noise, solid waste, radiant energy, and radioactive materials, as well as other pollutants and resources encountered or generated by the Contractor. The Contractor is obligated to consider specified control measures with the costs included within the various contract items of work.

B. Environmental pollution and damage is defined as the presence of chemical, physical, or biological elements or agents which:

1. Adversely affect human health or welfare,

2. Unfavorably alter ecological balances of importance to human life,

3. Effect other species of importance to humankind, or;

4. Degrade the utility of the environment for aesthetic, cultural, and historical purposes.

C. Definitions of Pollutants:

1. Air: The presence on the ambient air of one or more air pollutants (e.g., dust, fumes, mist, smoke, particulate matter) in such quantities as likely to be injurious to the environment, to health of human, plant or animal life or to property

2. Chemical Waste: Petroleum products, bituminous materials, salts, acids, alkalis, herbicides, pesticides, organic chemicals, and inorganic wastes.

3. Debris: Combustible and noncombustible wastes, such as leaves, tree trimmings, ashes, and waste materials resulting from construction or maintenance and repair work.

4. Sediment: Soil and other debris that has been eroded and transported by runoff water.

5. Solid Waste: Rubbish, debris, garbage, and other discarded solid materials resulting from industrial, commercial, and agricultural operations and from community activities.

6. Surface Discharge: The term "Surface Discharge" implies that the water is discharged with possible sheeting action and subsequent soil erosion may occur. Waters that are surface discharged may terminate in drainage ditches, storm sewers, creeks, and/or "water of the United States" and would require a permit to discharge water from the governing agency.

7. Rubbish: Combustible and noncombustible wastes such as paper, boxes, glass and crockery, metal and lumber scrap, tin cans, and bones.

8. Sanitary Wastes:

   a. Sewage: Domestic sanitary sewage and human and animal waste.

   b. Garbage: Refuse and scraps resulting from preparation, cooking, dispensing, and consumption of food.

1.02 QUALITY CONTROL

A. Establish and maintain quality control for the environmental protection of all items set forth herein.

B. Record on daily reports any problems in complying with laws, regulations, and ordinances. Note any corrective action taken.

1.03 SUBMITTALS

A. In accordance with Section, 01 3300, SUBMITTAL PROCEDURES, furnish the following:

1. Environmental Protection Plan: After the contract is awarded and prior to the commencement of the work, the Contractor shall meet with the Engineer and Owner to discuss the implementation of the sedimentation and erosion control plan found in the contract drawings and to develop mutual understanding relative to details of that plan. The Contractor shall prepare and submit to the Engineer and Owner for approval as outlined in section 01 3100 Project Management and Controls, a written and/or graphic Environmental Protection Plan including, but not limited to, the following:

   a. Name(s) of person(s) within the Contractor's organization who is (are) responsible for ensuring adherence to the Environmental Protection Plan and the CT Department of Energy and Environmental Protections General Permit for the Discharge of Stormwater and Dewatering Wastewaters from Construction Activities (if applicable)

   b. Name(s) and qualifications of person(s) responsible for manifesting hazardous waste to be removed from the site.

   c. Name(s) and qualifications of person(s) responsible for training the Contractor's environmental protection personnel.

d. Name(s) and qualifications of person(s) responsible for conducting routine sedimentation and erosion control inspections, and their qualifications.

e. Description of the Contractor's environmental protection personnel training program.

f. Methods for protection of features to be preserved within authorized work areas including trees, shrubs, vines, grasses, ground cover, landscape features, air and water quality, fish and wildlife, soil, historical, and archeological and cultural resources.

g. Procedures to provide the environmental protection that comply with the applicable laws and regulations. Describe the procedures to correct pollution of the environment due to accident, natural causes, or failure to follow the procedures as described in the Environmental Protection Plan.

h. Permits, licenses, and the location of the solid waste disposal area and recycling centers, if applicable.

i. Any alterations to the sedimentation and erosion control drawings and/or Environmental Plan including but not limited to showing locations of any haul roads, stream crossings, material storage areas, structures, sanitary facilities, and stockpiles of excess or spoil materials.

B. Approval of the Contractor's Environmental Protection Plan will not relieve the Contractor of their responsibility for adequate and continued control of pollutants and other environmental protection measures.

1.04 PROTECTION OF ENVIRONMENTAL RESOURCES

A. Protect environmental resources within the project boundaries and those affected outside the limits of permanent work during the entire period of this contract. Confine activities to areas defined by the specifications and drawings.

1. Protection of Air Quality:

a. All Contractors, diesel powered on-road and off-road construction equipment used on site during the course of the project shall meet the following:

(1) On-road and off-road construction vehicles shall not operate for more than three (3) consecutive minutes and no longer than five (5) total minutes in any 60-minute period when the vehicles are not in motion. Exceptions are made for weather extremes, health and safety and certain operational conditions set forth in Regulations of Connecticut State Agencies (RCSA) Section 22a-174-18(b)(3)(C).

(2) Contractors shall implement and track a preventative maintenance plan for all equipment according to the engine manufactures specifications.

(3) The use of ultra-low sulfur diesel fuel (less than or equal to 15 ppm sulfur content as defined by ASTM) shall be used for all diesel powered construction equipment.

(4) 50 percent of all construction equipment runtime shall be based on using equipment that has an U.S. Environmental Protection Agency (EPA) compliance rating of Tier 2 or higher. All equipment shall have a minimum compliance rating of Tier 1. Contractors can retrofit older equipment with diesel oxidation catalysts or particulate filters to meet EPA Tier standards. In addition, all motor vehicles and/or construction equipment (both on-road and off-road) shall comply with all pertinent State and Federal regulations relative to exhaust emission controls and safety.

(5) The Contractor or Construction Manager, in conjunction with the Subcontractors shall at least monthly record the following and provide upon request to the University representative the following:

(a) Make, Model and Year of all equipment

(b) Tier Rating of each piece of equipment

(c) Run Time of each piece of equipment

(d) Calculation of percentage of runtime per tier of equipment

(e) Fuel purchasing records

(f) Equipment maintained plan demonstrating equipment maintenance is per manufactures recommendations.

(g) Enforcement records of idle reduction policy.

b. All Work shall be conducted to ensure that no harmful effects are caused to adjacent Sensitive Receptor Sites. When placing heavy equipment and accepting deliveries, diesel powered engines shall be located away from fresh air intakes, air conditioners, entry ways and operative windows.

c. If any diesel powered on-road and off-road construction equipment is found to be in non-compliance with these provisions by the Owner's Project Manager, the Contractor or Construction Manager will be issued a notice with an immediate right to cure within five (5) minutes of receipt for idling vehicles and equipment, twelve (12) hour period of

receipt for moving cranes and twenty four (24) hour of receipt in which to bring the equipment not retrofitted into compliance or remove it from the Project. The Contractor or Construction Manager failure to comply with these provisions shall be reason to withhold payment or terminate the contract as prescribed within the contract documents.

d. Any costs associated with these provisions shall be included in the general cost of the contract. In addition, there shall be no time granted to the Contractor or Construction Manager for compliance with these provisions. The Contractor or Construction Manager compliance with these provisions and any associated regulations shall not be grounds for a Change Order.

e. The Contractor or Construction Manager may request a waiver to all or portions of these provisions with written justification to the University Project Manager as to why the Contractor, Construction Manager or Subcontractor cannot comply with these provisions. A waiver, to be effective, must be granted in writing by the University.

B. Equipment and Vehicles

1. Contractor shall review construction vehicle and equipment exhaust outlets in relationship to existing plant material with Owner. If exhaust is directed at existing plant material the placement of the equipment shall be altered or the exhaust outlet shall be altered by use of flexible exhaust pipe or other approved method. All efforts shall be made to protect plant material from direct exhaust outlets.

2. Engine braking or exhaust braking shall be prohibited on campus roads and surrounding state roads leading to any campus.

C. Protection of Land Resources:

1. Prior to construction, identify all land resources to be preserved within the work area. Do not remove, cut, deface, injure, or destroy land resources including trees, shrubs, vines, grasses, top soil, and land forms without permission from the Resident Engineer. Do not fasten or attach ropes, cables, or guys to trees for anchorage unless specifically authorized, or where special emergency use is permitted.

a. Work Area Limits: Include within the Site Logistics Plan and prior to any construction, mark the areas that require work to be performed under this contract. Mark or fence isolated areas within the general work area that are to be saved and protected. Protect monuments, works of art, and markers before construction operations begin. Convey to all personnel the purpose of marking and protecting all necessary objects.

b. Protection of Landscape: Protect trees, shrubs, vines, grasses, land forms, and other landscape features shown on the drawings to be preserved by marking, fencing, or using any other approved techniques.

(1) Box and protect from damage existing trees and shrubs to remain on the construction site.

(2) Immediately repair all damage to existing trees and shrubs by trimming, cleaning, and painting with antiseptic tree paint.

(3) Do not store building materials or perform construction activities closer to existing trees or shrubs than the farthest extension of their limbs.

1.05 PROTECTION OF WATER RESOURCES:

A. Sedimentation and Erosion Control (E&S) measures are required for all University projects involving earthwork to prevent the movement of sediments off construction sites into nearby water bodies by implementing sedimentation and erosion controls. For projects greater than 1 acres of land disturbance, the University obtains a General Permit for the Discharge of Stormwater and Dewatering Wastewaters from Construction Activities.

B. Contractor must adhere to all requirements of any permit(s) under this project, including but not limited to General Permit for the Discharge of Stormwater and Dewatering Wastewaters from Construction Activities (Construction GP) Notable requirements include:

1. Follow the erosion control plan and stormwater pollution prevention plan (if applicable)contained in the project documents;

2. Inspect E&S per the requirements in the construction GP;

3. Perform turbidity sampling per the requirements in the construction GP and submit the results to the CTDEEP (if applicable);

4. Minimize dust;

5. Maintain all controls such as silt fence, anti-tracking pads, and catch basin silt sacks;

6. The dumping of liquids in the storm sewer is prohibited.

7. All post-construction stormwater structures shall be cleaned of sediments and any remaining silt fence and silt sacks shall be removed upon stabilization of the project’s site soils.

1.06 WASTE DISPOSAL:

A. Handle and dispose of solid wastes in such a manner that will prevent contamination of the environment.

1. Place solid wastes (excluding clearing debris) in containers that are emptied on a regular schedule. Transport all solid waste off Government property and dispose of waste in compliance with Federal, State, and local requirements.

2. Store chemical waste away from the work areas in corrosion resistant containers and dispose of waste in accordance with Federal, State, and local regulations.

3. Handle discarded materials other than those included in the solid waste category as directed by the Resident Engineer.

B. Protection of Air Resources:

1. Keep construction activities under surveillance, management, and control to minimize pollution of air resources. Burning is not permitted on the job site. Keep activities, equipment, processes, and work operated or performed, in strict accordance with the State of Connecticut Department of Energy and Environmental Protection (CTDEEP) air regulations and Federal emission and performance laws and standards. Maintain ambient air quality standards set by the Environmental Protection Agency, for those construction operations and activities specified.

a. Control of Particulate Matter and Visible Emissions

b. (Regulations of Connecticut State Agencies (RCSA) § 22a-174-18):

c. Control dust particles, aerosols, and gaseous by-products from all construction activities, processing, and preparation of materials (such as from asphaltic batch plants) at all times, including weekends, holidays, and hours when work is not in progress.

d. Maintain all excavations, stockpiles, haul roads, permanent and temporary access roads, plant sites, spoil areas, borrow areas, and all other work areas within or outside the project boundaries free from particulates which would cause a hazard or a nuisance. Spraying chemical treatment of an approved type, light bituminous treatment, baghouse, scrubbers, electrostatic precipitators, or other methods are permitted to control particulates in the work area.

e. Control of Organic Compound Emissions (RCSA § 22a-174-20): Control organic compound emissions from equipment to applicable State allowable limits.

f. Control of Odors (RCSA § 22a-174-23): Control odors of construction activities and prevent obnoxious odors from occurring.

C. Reduction of Noise:

1. Minimize noise using every action possible. Perform noise-producing work in less sensitive hours of the day or week as directed by the Resident Engineer. Maintain noise-produced work at or below the decibel levels and within the time periods specified.

2. Perform construction activities involving repetitive, high-level impact noise only between 8:00 a.m. and 8:00 p.m unless otherwise permitted by local ordinance or the Owner. Repetitive impact noise on the property shall not exceed the following dB limitations:

Time Duration of Impact Noise	Sound Level in dB
More than 12 minutes in any hour	70
Less than 30 seconds of any hour	85
Less than three minutes of any hour	80
Less than 12 minutes of any hour	75

3. Provide sound-deadening devices on equipment and take noise abatement measures that are necessary to comply with the requirements of this contract, consisting of, but not limited to, the following:

a. Use shields or other physical barriers to restrict noise transmission.

b. Provide soundproof housings or enclosures for noise-producing machinery.

c. Use efficient silencers on equipment air intakes.

d. Use efficient intake and exhaust mufflers on internal combustion engines that are maintained so equipment performs below noise levels specified.

e. Line hoppers and storage bins with sound deadening material.

f. Conduct truck loading, unloading, and hauling operations so that noise is kept to a minimum.

g. 3. Measure sound level for noise exposure due to the construction at least once every five successive days while work is being performed above 75 dB(A) noise level. Measure noise exposure at the property line or 15 m (50 feet) from the noise source, whichever is greater. Measure the sound levels on the A weighing network of a General Purpose sound level meter at slow response. To minimize the effect of reflective sound waves at buildings, take measurements at 900 to 1800 mm (three to six feet) in front of any building face. Submit the recorded information to the Resident Engineer noting any problems and the alternatives for mitigating actions.

D. Final Clean-up: On completion of project and after removal of all debris, rubbish, and temporary construction, Contractor shall leave the construction area in a clean condition satisfactory to Owner and Engineer requirements. Cleaning shall include off the station disposal of all items and materials not required to be salvaged, all debris and rubbish resulting from demolition and new work operations and removal of all “call before you dig markings” placed on behalf of the project, regardless if the Contractor marked or called to mark the location.

END OF SECTION

SECTION 01-6000

PRODUCT REQUIREMENTS

PART 1 – GENERAL

1.01 RELATED DOCUMENTS

A. Drawings and general provisions of the Contract, including General and Supplementary Conditions and other Division 01 Specification Sections, apply to this Section.

1.02 SUMMARY

A. Section includes administrative and procedural requirements for selection of products for use in Project; product delivery, storage, and handling; manufacturers' standard warranties on products; special warranties; and comparable products.

B. Related Requirements:

1. Division 01 Section "Allowances" for products selected under an allowance.

2. Division 01 Section "Alternates" for products selected under an alternate.

3. Division 01 Section "Substitution Procedures" for requests for substitutions.

1.03 DEFINITIONS

A. Products: Items obtained for incorporating into the Work, whether purchased for Project or taken from previously purchased stock. The term "product" includes the terms "material," "equipment," "system," and terms of similar intent.

1. Named Products: Items identified by manufacturer's product name, including make or model number or other designation shown or listed in manufacturer's published product literature that is current as of date of the Contract Documents.

2. New Products: Items that have not previously been incorporated into another project or facility. Products salvaged or recycled from other projects are not considered new products.

3. Comparable Product: Product that is demonstrated and approved through submittal process to have the indicated qualities related to type, function, dimension, in-service performance, physical properties, appearance, and other characteristics that equal or exceed those of specified product.

B. Basis-of-Design Product Specification: A specification in which a specific manufacturer's product is named and accompanied by the words "basis-of-design product," including make or model number or other designation, to establish the

significant qualities related to type, function, dimension, in-service performance, physical properties, appearance, and other characteristics for purposes of evaluating comparable products of additional manufacturers named in the specification.

1.04 ACTION SUBMITTALS

A. Comparable Product Requests: Submit request for consideration of each comparable product. Identify product or fabrication or installation method to be replaced. Include Specification Section number and title and Drawing numbers and titles.

1. Include data to indicate compliance with the requirements specified in Division One Section "Substitutions".

2. Architect/Engineer's Action: Review action shall follow all requirements specified in Division One Sections on "Substitutions" and "Submittals".

a. Form of Approval: As specified in Division 01 Section "Submittal Procedures."

b. Use product specified if Architect/Engineer does not issue a decision on use of a comparable product request within time allocated.

B. Basis-of-Design Product Specification Submittal: Comply with requirements in Division 01 Section "Submittal Procedures." Show compliance with requirements.

1.05 QUALITY ASSURANCE

A. Compatibility of Options: If Contractor is given option of selecting between two or more products for use on Project, select product compatible with products previously selected, even if previously selected products were also options.

1. Each contractor is responsible for providing products and construction methods compatible with products and construction methods of other contractors.

2. If a dispute arises between contractors over concurrently selectable but incompatible products, Architect/Engineer will determine which products shall be used.

1.06 PRODUCT DELIVERY, STORAGE, AND HANDLING

A. Deliver, store, and handle products using means and methods that will prevent damage, deterioration, and loss, including theft and vandalism. Comply with manufacturer's written instructions.

B. Delivery and Handling:

1. Schedule delivery to minimize long-term storage at Project site and to prevent overcrowding of construction spaces.

2. Coordinate delivery with installation time to ensure minimum holding time for items that are flammable, hazardous, easily damaged, or sensitive to deterioration, theft, and other losses.

3. Deliver products to Project site in an undamaged condition in manufacturer's original sealed container or other packaging system, complete with labels and instructions for handling, storing, unpacking, protecting, and installing.

4. Inspect products on delivery to determine compliance with the Contract Documents and to determine that products are undamaged and properly protected.

C. Storage:

1. Store products to allow for inspection and measurement of quantity or counting of units.

2. Store materials in a manner that will not endanger Project structure.

3. Store products that are subject to damage by the elements, under cover in a weathertight enclosure above ground, with ventilation adequate to prevent condensation.

4. Protect foam plastic from exposure to sunlight, except to extent necessary for period of installation and concealment.

5. Comply with product manufacturer's written instructions for temperature, humidity, ventilation, and weather-protection requirements for storage.

6. Protect stored products from damage and liquids from freezing.

7. Provide a secure location and enclosure at Project site for storage of materials and equipment by Owner's construction forces. Coordinate location with Owner.

1.07 PRODUCT WARRANTIES

A. Warranties specified in other Sections shall be in addition to, and run concurrent with, other warranties required by the Contract Documents. Manufacturer's disclaimers and limitations on product warranties do not relieve Contractor of obligations under requirements of the Contract Documents.

1. Manufacturer's Warranty: Written warranty furnished by individual manufacturer for a particular product and specifically endorsed by manufacturer to Owner.

2. Special Warranty: Written warranty required by the Contract Documents to provide specific rights for Owner.

B. Special Warranties: Prepare a written document that contains appropriate terms and identification, ready for execution.

1. Manufacturer's Standard Form: Modified to include Project-specific information and properly executed.

2. Specified Form: When specified forms are included with the Specifications, prepare a written document using indicated form properly executed.

3. See Divisions 02 through 33 Sections for specific content requirements and particular requirements for submitting special warranties.

C. Submittal Time: Comply with requirements in Division 01 Section "Closeout Procedures."

PART 2 – PRODUCTS

2.01 PRODUCT SELECTION PROCEDURES

A. General Product Requirements: Provide products that comply with the Contract Documents, are undamaged and, unless otherwise indicated, are new at time of installation.

1. Provide products complete with accessories, trim, finish, fasteners, and other items needed for a complete installation and indicated use and effect.

2. Standard Products: If available, and unless custom products or nonstandard options are specified, provide standard products of types that have been produced and used successfully in similar situations on other projects.

3. Owner reserves the right to limit selection to products with warranties not in conflict with requirements of the Contract Documents.

4. Where products are accompanied by the term "as selected," Architect/Engineer will make selection.

5. Descriptive, performance, and reference standard requirements in the Specifications establish salient characteristics of products.

6. Or Equal: For products specified by name and accompanied by the term "or equal," or "or approved equal," or "or approved," comply with requirements in "Comparable Products" Article to obtain approval for use of an unnamed product.

B. Product Selection Procedures: Product selection is governed by the Contract Documents and governing regulations and not by previous Project experience. Procedures governing product selection include the following:

1. Proprietary Specification Requirements: Where Specifications name only a single manufacturer and product, provide the named product that complies with requirements. Comparable products or substitutions for Contractor's convenience will not be considered.

2. Semi proprietary Specification Requirements: Where Specifications name three or more products or manufacturers, provide one of the products indicated. Comparable products or substitutions for Contractor's convenience will not be considered.

    a. Where products or manufacturers are specified by name, accompanied by the term “or equal,” or “or approved equal” comply with the provisions concerning “substitutions” to obtain approval for use of an unnamed product.

3. Non-Proprietary Specifications: When the Specifications list products or manufacturers that are available and may be incorporated in the Work, but do not restrict the Contractor to use of these products only, the Contractor may propose any available product that complies with Contact requirements. Comply with provisions concerning “substitutions” to obtain approval for use of an unnamed product.

4. Descriptive Specification Requirements: Where Specifications describe a product or assembly, listing exact characteristics required, with or without use of a brand or trade name, provide a product or assembly that provides the characteristics and otherwise complies with Contract requirements.

5. Performance Specification Requirements: Where Specifications require compliance with performance requirements, provide products that comply with these requirements, and are recommended by the manufacturer for the application indicated. General overall performance of a product is implied where the product is specified for a specific application.

    a. Manufacture’s recommendations may be contained in published product literature, or by the manufacturer’s certification of performance.

6. Basis-of-Design Product: Where Specifications name a product, or refer to a product indicated on Drawings, and include a list of manufacturers, provide the specified or indicated product or a comparable product by one of the other named manufacturers. Drawings and Specifications indicate sizes, profiles, dimensions, and other characteristics that are based on the product named. Comply with requirements in "Comparable Products" Article for consideration of an unnamed product by one of the other named manufacturers.

7. Visual Matching Specification: Where Specifications require "match Architect/Engineer's sample", provide a product that complies with requirements and matches Architect/Engineer's sample. Architect/Engineer's decision will be final on whether a proposed product matches.

    a. If no product available within specified category matches and complies with other specified requirements, comply with requirements in Division 01 Section "Substitution Procedures" for proposal of product.

8. Visual Selection Specification: Where Specifications include the phrase "as selected by Architect/Engineer from manufacturer's full range" or similar phrase, select a product that complies with requirements. Architect/Engineer will select color, gloss, pattern, density, or texture from manufacturer's product line that includes both standard and premium items.

9. Allowances: Refer to individual Specification Sections and provisions in Section 01-2100, Allowances, for allowances that control product selection, and for procedures required for processing such selections.

2.02 COMPARABLE PRODUCTS

A. Conditions for Consideration: Architect/Engineer will consider Contractor's request for comparable product when the following conditions are satisfied. If the following conditions are not satisfied, Architect/Engineer may return requests without action, except to record noncompliance with these requirements:

1. Evidence that the proposed product does not require revisions to the Contract Documents that it is consistent with the Contract Documents and will produce the indicated results, and that it is compatible with other portions of the Work.

2. Proposed changes are in keeping with the intent of Contract Documents.

3. The request is timely, fully documented and properly submitted.

4. The request is directly related to an “or equal” clause or similar language in the Contract Documents.

5. The specified product or method of construction cannot be provided within the Contract Time.

   a. The request will not be considered if the product or method cannot be provided as a result of failure to pursue the Work promptly, coordinate activities properly or to adhere with the sequence of work within the contract schedule.

6. The specified product or method of construction cannot receive necessary approval by a governing authority.

7. A substantial advantage is offered the Owner, in terms of cost, time, energy conversation or other considerations of merit, after deduction offsetting responsibilities the Owner may be required to bear.

   a. Additional responsibilities for the Owner may include additional compensation to the Architect/Engineer for redesign and evaluation services, increased cost of other construction by the Owner or separate Contractors, and similar considerations.

8. The specified product or method of construction cannot be provided in a manner that is compatible with other material, and where the Contractor certifies that the comparable product will overcome the incompatibility.

9. The specified product or method of construction cannot be coordinated with other materials, and where the Contractor certifies that the proposed comparable product can be coordinated.

10. The specified product or method of construction cannot provide a warranty required by the Contract Documents and where the Contractor certifies that the proposed comparable product provide the required warranty.

11. Detailed comparison of significant qualities of proposed product with those named in the Specifications. Significant qualities include attributes such as performance, weight, size, durability, visual effect, and specific features and requirements indicated.

12. List of similar installations for completed projects with project names and addresses and names and addresses of architects and owners, if requested.

13. Samples, if requested.

B. The Contractor's submittal and Architect/Engineer's acceptance of Shop Drawings, Product Data or Samples that relate to construction activities not complying with the Contract Documents does not constitute an acceptable or valid submittal, nor does it constitute approval.

PART 3 – EXECUTION

3.01 INSTALLATION OF PRODUCTS:

A. Comply with manufacturer's instructions and recommendations for installation of products in the applications indicated. Anchor each product securely in place, accurately located and aligned with other work.

1. Clean exposed surfaces and protect as necessary to ensure freedom from damage and deterioration at time of Substantial Completion.

END OF SECTION

SECTION 01-7300

EXECUTION

PART 1 – GENERAL

1.01 RELATED DOCUMENTS

A. Drawings and general provisions of the Contract, including General and Supplementary Conditions and other Division 01 Specification Sections, apply to this Section.

1.02 SUMMARY

A. Section includes general administrative and procedural requirements governing execution of the Work including, but not limited to, the following:

1. Construction layout.
2. Field engineering and surveying.
3. Installation of the Work.
4. Cutting and patching.
5. Coordination of Owner-installed products.
6. Progress cleaning.
7. Starting and adjusting.
8. Protection of installed construction.

B. Related Requirements:

1. Division 01 Section "Summary" for limits on use of Project site.
2. Division 01 Section "Submittal Procedures" for submitting surveys.
3. Division 01 Section "Closeout Procedures" for submitting final property survey with Project Record Documents, recording of Owner-accepted deviations from indicated lines and levels, and final cleaning.

1.03 DEFINITIONS

A. Cutting: Removal of in-place construction necessary to permit installation or performance of other work.

B. Patching: Fitting and repair work required to restore construction to original conditions after installation of other work.

1.04 INFORMATIONAL SUBMITTALS

A. Certificates: Submit certificate signed by land surveyor certifying that location and elevation of improvements comply with requirements.

B. Cutting and Patching Plan: Submit plan describing procedures at least fourteen (14) days prior to the time cutting and patching will be performed. Include the following information:

1. Extent: Describe reason for and extent of each occurrence of cutting and patching.

2. Changes to In-Place Construction: Describe anticipated results. Include changes to structural elements and operating components as well as changes in building appearance and other significant visual elements.

3. Products: List products to be used for patching and firms or entities that will perform patching work.

4. Dates: Indicate when cutting and patching will be performed.

5. Utilities and Mechanical and Electrical Systems: List services and systems that cutting and patching procedures will disturb or affect. List services and systems that will be relocated and those that will be temporarily out of service. Indicate length of time permanent services and systems will be disrupted.

a. Include description of provisions for temporary services and systems during interruption of permanent services and systems.

1.05 QUALITY ASSURANCE

A. Land Surveyor Qualifications: A professional land surveyor who is legally qualified to practice in jurisdiction where Project is located and who is experienced in providing land-surveying and GIS services of the kind indicated.

B. Cutting and Patching: Comply with requirements for and limitations on cutting and patching of construction elements.

1. Structural Elements: When cutting and patching structural elements, notify Architect/Engineer of locations and details of cutting and await directions from Architect/Engineer before proceeding. Shore, brace, and support structural elements during cutting and patching. Do not cut and patch structural elements in a manner that could change their load-carrying capacity or increase deflection

2. Operational Elements: Do not cut and patch operating elements and related components in a manner that results in reducing their capacity to perform as

intended or that results in increased maintenance or decreased operational life or safety.

3. Other Construction Elements: Do not cut and patch other construction elements or components in a manner that could change their load-carrying capacity, that results in reducing their capacity to perform as intended, or that results in increased maintenance or decreased operational life or safety

4. Visual Elements: Do not cut and patch construction in a manner that results in visual evidence of cutting and patching. Do not cut and patch exposed construction in a manner that would, in Architect/Engineer's opinion, reduce the building's aesthetic qualities. Remove and replace construction that has been cut and patched in a visually unsatisfactory manner.

C. Cutting and Patching Conference: Before proceeding, meet at Project site with parties involved in cutting and patching, including mechanical and electrical trades for review of plan. Review areas of potential interference and conflict. Coordinate procedures and resolve potential conflicts before proceeding.

D. Manufacturer's Installation Instructions: Obtain and maintain on-site manufacturer's written recommendations and instructions for installation of products and equipment.

PART 2 – PRODUCTS

2.01 MATERIALS

A. General: Comply with requirements specified in other Sections.

1. For projects requiring compliance with sustainable design and construction practices and procedures, use products for patching that comply with requirements in sustainable design requirement Sections.

B. In-Place Materials: Use materials for patching identical to in-place materials. For exposed surfaces, use materials that visually match in-place adjacent surfaces to the fullest extent possible.

1. If identical materials are unavailable or cannot be used, use materials that, when installed, will provide a match acceptable to Architect/Engineer for the visual and functional performance of in-place materials.

PART 3 – EXECUTION

3.01 EXAMINATION

A. Existing Conditions: The existence and location of underground and other utilities and construction indicated as existing are not guaranteed. Before beginning sitework, investigate and verify the existence and location of underground utilities, mechanical and electrical systems, and other construction affecting the Work.

1. Before construction, verify the location and invert elevation at points of connection of sanitary sewer, storm sewer, and water-service piping; underground electrical services, and other utilities.

2. Furnish location data for work related to Project that must be performed by public utilities serving Project site.

B. Examination and Acceptance of Conditions: Before proceeding with each component of the Work, examine substrates, areas, and conditions, with Installer or Applicator present where indicated, for compliance with requirements for installation tolerances and other conditions affecting performance. Record observations.

1. Examine roughing-in for mechanical and electrical systems to verify actual locations of connections before equipment and fixture installation.

2. Examine walls, floors, and roofs for suitable conditions where products and systems are to be installed.

3. Verify compatibility with and suitability of substrates, including compatibility with existing finishes or primers.

C. Written Report: Where a written report listing conditions detrimental to performance of the Work is required by other Sections, include the following:

1. Description of the Work.

2. List of detrimental conditions, including substrates.

3. List of unacceptable installation tolerances.

4. Recommended corrections.

D. Proceed with installation only after unsatisfactory conditions have been corrected. Proceeding with the Work indicates acceptance of surfaces and conditions.

3.02 PREPARATION

A. Existing Utility Information: Furnish information to Owner that is necessary to adjust, move, or relocate existing utility structures, utility poles, lines, services, or other utility appurtenances located in or affected by construction. And coordinate with authorities having jurisdiction.

B. Field Measurements: Take field measurements as required to fit the Work properly. Recheck measurements before installing each product. Where portions of the Work are indicated to fit to other construction, verify dimensions of other construction by field measurements before fabrication. Coordinate fabrication schedule with construction progress to avoid delaying the Work.

1. Verification of measurements and locations shall be performed by a licensed surveyor who will collect the GIS coordinates that will be included in the final as-built documentation.

C. Space Requirements: Verify space requirements and dimensions of items shown diagrammatically on Drawings.

D. Review of Contract Documents and Field Conditions: Immediately on discovery of the need for clarification of the Contract Documents caused by differing field conditions outside the control of Contractor, submit a request for information to Architect/Engineer according to requirements in Division 01 Section "Project Management and Coordination."

3.03 CONSTRUCTION LAYOUT

A. Verification: Before proceeding to lay out the Work, verify layout information shown on Drawings, in relation to the property survey and existing benchmarks. If discrepancies are discovered, notify Architect/Engineer promptly.

B. General: Engage a land surveyor to lay out the Work using accepted surveying practices.

1. Establish benchmarks and control points to set lines and levels at each story of construction and elsewhere as needed to locate each element of Project.

2. Establish limits on use of Project site.

3. Establish dimensions within tolerances indicated. Do not scale Drawings to obtain required dimensions.

4. Inform installers of lines and levels to which they must comply.

5. Check the location, level and plumb, of every major element as the Work progresses.

6. Notify Architect/Engineer when deviations from required lines and levels exceed allowable tolerances.

7. Close site surveys with an error of closure equal to or less than the standard established by authorities having jurisdiction.

C. Site Improvements: Locate and lay out site improvements, including pavements, grading, fill and topsoil placement, utility slopes, and rim and invert elevations.

D. Building Lines and Levels: Locate and lay out control lines and levels for structures, building foundations, column grids, and floor levels, including those required for mechanical and electrical work. Transfer survey markings and elevations for use with control lines and levels. Level foundations and piers from two or more locations.

E. Record Log: Maintain a log of layout control work. Record deviations from required lines and levels. Include beginning and ending dates and times of surveys, weather conditions, name and duty of each survey party member, and types of instruments and tapes used. Make the log available for reference by Architect/Engineer.

3.04 FIELD ENGINEERING

A. Reference Points: Locate existing permanent benchmarks, control points, and similar reference points before beginning the Work. Preserve and protect permanent benchmarks and control points during construction operations.

1. Do not change or relocate existing benchmarks or control points without prior written approval of Owner. Report lost or destroyed permanent benchmarks or control points promptly. Report the need to relocate permanent benchmarks or control points to Owner before proceeding.

2. Replace lost or destroyed permanent benchmarks and control points promptly. Base replacements on the original survey control points.

B. Benchmarks: Establish and maintain a minimum of two permanent benchmarks on Project site, referenced to data established by survey control points. Comply with authorities having jurisdiction for type and size of benchmark.

1. Record benchmark locations, with horizontal and vertical data, on Project Record Documents.

2. Where the actual location or elevation of layout points cannot be marked, provide temporary reference points sufficient to locate the Work.

3. Remove temporary reference points when no longer needed. Restore marked construction to its original condition.

C. Certified Survey: On completion of foundation walls, major site improvements, and other work requiring field-engineering services, prepare a certified survey showing dimensions, locations, angles, and elevations of construction and sitework.

3.05 INSTALLATION

A. General: Locate the Work and components of the Work accurately, in correct alignment and elevation, as indicated.

1. Make vertical work plumb and make horizontal work level.

2. Where space is limited, install components to maximize space available for maintenance and ease of removal for replacement.

3. Conceal pipes, ducts, and wiring in finished areas unless otherwise indicated.

4. Document slope and locations of material and product below and above ground on all utilities. Such documentation shall be performed by a licensed surveyor who will collect the GIS coordinates that will be included in the final as-built documentation.

B. Comply with manufacturer's written instructions and recommendations for installing products in applications indicated.

C. Install products at the time and under conditions that will ensure the best possible results. Maintain conditions required for product performance until Substantial Completion.

D. Conduct construction operations so no part of the Work is subjected to damaging operations or loading in excess of that expected during normal conditions of occupancy.

E. Sequence the Work and allow adequate clearances to accommodate movement of construction items on site and placement in permanent locations.

F. Tools and Equipment: Do not use tools or equipment that produce harmful noise levels or create high vibrations.

G. Templates: Obtain and distribute to the parties involved templates for work specified to be factory prepared and field installed. Check Shop Drawings of other work to confirm that adequate provisions are made for locating and installing products to comply with indicated requirements.

H. Attachment: Provide blocking and attachment plates and anchors and fasteners of adequate size and number to securely anchor each component in place, accurately located and aligned with other portions of the Work. Where size and type of attachments are not indicated, verify size and type required for load conditions.

1. Mounting Heights: Where mounting heights are not indicated, mount components at heights directed by Architect/Engineer.

2. Allow for building movement, including thermal expansion and contraction.

3. Coordinate installation of anchorages. Furnish setting drawings, templates, and directions for installing anchorages, including sleeves, concrete inserts, anchor bolts, and items with integral anchors, that are to be embedded in concrete or masonry. Deliver such items to Project site in time for installation.

I. Joints: Make joints of uniform width. Where joint locations in exposed work are not indicated, arrange joints for the best visual effect as approved by the Architect/Engineer. Fit exposed connections together to form hairline joints.

J. Hazardous Materials: Use products, cleaners, and installation materials that are not considered hazardous.

3.06 CUTTING AND PATCHING

A. Cutting and Patching, General: Employ skilled workers to perform cutting and patching. Proceed with cutting and patching at the earliest feasible time, and complete without delay.

1. Cut in-place construction to provide for installation of other components or performance of other construction, and subsequently patch as required to restore surfaces to their original condition.

B. Existing Warranties: Remove, replace, patch, and repair materials and surfaces cut or damaged during installation or cutting and patching operations, by methods and with materials so as not to void existing warranties.

C. Temporary Support: Provide temporary support of work to be cut.

D. Protection: Protect in-place construction during cutting and patching to prevent damage. Provide protection from adverse weather conditions for portions of Project that might be exposed during cutting and patching operations.

E. Adjacent Occupied Areas: Where interference with use of adjoining areas or interruption of free passage to adjoining areas is unavoidable, coordinate cutting and patching according to requirements in Division 01 Section "Summary."

F. Existing Utility Services and Mechanical/Electrical Systems: Where existing services/systems are required to be removed, relocated, or abandoned, bypass such services/systems before cutting to minimize interruption to occupied areas.

G. Cutting: Cut in-place construction by sawing, drilling, breaking, chipping, grinding, and similar operations, including excavation, using methods least likely to damage elements retained or adjoining construction. If possible, review proposed procedures with original Installer; comply with original Installer's written recommendations.

1. In general, use hand or small power tools designed for sawing and grinding, not hammering and chopping. Cut holes and slots neatly to minimum size required, and with minimum disturbance of adjacent surfaces. Temporarily cover openings when not in use.

2. Finished Surfaces: Cut or drill from the exposed or finished side into concealed surfaces.

3. Concrete and Masonry: Cut using a cutting machine, such as an abrasive saw or a diamond-core drill.

4. Mechanical and Electrical Services: Cut off pipe or conduit in walls or partitions to be removed. Cap, valve, or plug and seal remaining portion of pipe or conduit to prevent entrance of moisture or other foreign matter after cutting.

5. Proceed with patching after construction operations requiring cutting are complete.

H. Patching: Patch construction by filling, repairing, refinishing, closing up, and similar operations following performance of other work. Patch with durable seams that are as invisible as practicable. Provide materials and comply with installation requirements specified in other Sections, where applicable.

1. Inspection: Where feasible, test and inspect patched areas after completion to demonstrate physical integrity of installation.

2. Exposed Finishes: Restore exposed finishes of patched areas and extend finish restoration into retained adjoining construction in a manner that will eliminate evidence of patching and refinishing.

   a. Clean piping, conduit, and similar features before applying paint or other finishing materials.

   b. Restore damaged pipe covering to its original condition.

3. Floors and Walls: Where walls or partitions are removed extend one finished area into another, patch and repair floor and wall surfaces in the new space. Provide an even surface of uniform finish, color, texture, and appearance. Remove in-place floor and wall coverings and replace with new materials, if necessary, to achieve uniform color and appearance.

   a. Where patching occurs in a painted surface, prepare substrate and apply primer and intermediate paint coats appropriate for substrate over the patch, and apply final paint coat over entire unbroken surface containing the patch. Provide additional coats until patch blends with adjacent surfaces.

4. Ceilings: Patch, repair, or rehang in-place ceilings as necessary to provide an even-plane surface of uniform appearance.

5. Exterior Building Enclosure: Patch components in a manner that restores enclosure to a weathertight condition and ensures thermal and moisture integrity of building enclosure.

I. Cleaning: Clean areas and spaces where cutting and patching are performed. Remove paint, mortar, oils, putty, and similar materials from adjacent finished surfaces.

3.07 OWNER-INSTALLED PRODUCTS

A. Site Access: Provide access to Project site for Owner's construction personnel.

B. Coordination: Coordinate construction and operations of the Work with work performed by Owner's construction personnel.

1. Construction Schedule: Inform Owner of Contractor's preferred construction schedule for Owner's portion of the Work. Adjust construction schedule based on a mutually agreeable timetable. Notify Owner if changes to schedule are required due to differences in actual construction progress.

2. Preinstallation Conferences: Include Owner's construction personnel at preinstallation conferences covering portions of the Work that are to receive Owner's work. Attend preinstallation conferences conducted by Owner's construction personnel if portions of the Work depend on Owner's construction.

3.08 PROGRESS CLEANING

A. General: Clean Project site and work areas daily, including common areas. Enforce requirements strictly. Dispose of materials lawfully.

1. Comply with requirements in NFPA 241 for removal of combustible waste materials and debris.

2. Do not hold waste materials more than seven days during normal weather or three days if the temperature is expected to rise above 80 deg F.

3. Containerize hazardous and unsanitary waste materials separately from other waste. Mark containers appropriately and dispose of legally, according to regulations.

a. Use containers intended for holding waste materials of type to be stored.

4. Coordinate progress cleaning for joint-use areas where Contractor and other contractors are working concurrently.

5. Follow all Owner sustainable design requirements, not limited to LEED.

B. Site: Maintain Project site free of waste materials and debris.

C. Work Areas: Clean areas where work is in progress to the level of cleanliness necessary for proper execution of the Work.

1. Remove of non-hazardous liquid spills promptly.

2. Where dust would impair proper execution of the Work, broom-clean or vacuum the entire work area, as appropriate.

D. Installed Work: Keep installed work clean. Clean installed surfaces according to written instructions of manufacturer or fabricator of product installed, using only cleaning materials specifically recommended. If specific cleaning materials are not recommended, use cleaning materials that are not hazardous to health or property and that will not damage exposed surfaces.

E. Concealed Spaces: Remove debris from concealed spaces before enclosing the space.

F. Exposed Surfaces in Finished Areas: Clean exposed surfaces and protect as necessary to ensure freedom from damage and deterioration at time of Substantial Completion.

G. Waste Disposal: Do not bury or burn waste materials on-site. Do not wash waste materials down sewers or into waterways. Comply with waste disposal requirements in Construction Waste Management and Disposal.

H. During handling and installation, clean and protect construction in progress and adjoining materials already in place. Apply protective covering where required to ensure protection from damage or deterioration at Substantial Completion.

I. Clean and provide maintenance on completed construction as frequently as necessary through the remainder of the construction period. Adjust and lubricate operable components to ensure operability without damaging effects.

J. Limiting Exposures: Supervise construction operations to assure that no part of the construction completed or in progress, is subject to harmful, dangerous, damaging, or otherwise deleterious exposure during the construction period.

3.09 STARTING AND ADJUSTING

A. Coordinate startup and adjusting of equipment and operating components with requirements in "General Commissioning Requirements."

B. Start equipment and operating components to confirm proper operation. Remove malfunctioning units, replace with new units, and retest.

C. Adjust equipment for proper operation. Adjust operating components for proper operation without binding.

D. Test each piece of equipment to verify proper operation. Test and adjust controls and safeties. Replace damaged and malfunctioning controls and equipment.

E. Manufacturer's Field Service: Comply with qualification requirements in Division 01 Section "Quality Requirements."

3.10 PROTECTION OF INSTALLED CONSTRUCTION

A. Provide final protection and maintain conditions that ensure installed Work is without damage or deterioration at time of Substantial Completion.

B. Comply with manufacturer's written instructions for temperature and relative humidity.

END OF SECTION

SECTION 01-7700

CLOSEOUT PROCEDURES

PART 1 – GENERAL

1.01 RELATED DOCUMENTS

A. Drawings and general provisions of the Contract, including General and Supplementary Conditions and other Division 01 Specification Sections, apply to this Section.

1.02 SUMMARY

A. Section includes administrative and procedural requirements for contract closeout, including, but not limited to, the following:

1. Substantial Completion procedures.
2. Final completion procedures.
3. Warrantee Requirements
4. Submittal of Warranties.
5. Revenue Services Requirements
6. Final cleaning.
7. Repair of the Work.

B. Related Requirements:

1. Division 01 Section "Photographic Documentation" for submitting final completion construction photographic documentation.
2. Division 01 Section "Execution" for progress cleaning of Project site.
3. Division 01 Section "Operation and Maintenance Data" for operation and maintenance manual requirements.
4. Division 01 Section "Project Record Documents" for submitting record Drawings, record Specifications, and record Product Data.
5. Division 01 Section “Demonstration and Training” for requirements for instructing Owner’s personnel
6. Divisions 02 through 33 Sections for specific closeout and special cleaning requirements for the Work in those Sections.

1.03 ACTION SUBMITTALS

A. Product Data: For cleaning agents.

B. Contractor's List of Incomplete Items: Initial submittal at Substantial Completion.

C. Certified List of Incomplete Items: Final submittal at Final Completion.

1.04 CLOSEOUT SUBMITTALS

A. Review list of Owner requirements as conditions for meeting substantial completion. List is located at the following weblink: http://updc.uconn.edu

1.05 MAINTENANCE MATERIAL SUBMITTALS

A. Schedule of Maintenance Material Items: For maintenance material submittal items specified in other Sections.

1.06 SUBSTANTIAL COMPLETION PROCEDURES

A. Contractor's List of Incomplete Items: Prepare and submit a list of items to be completed and corrected (Contractor's punch list), indicating the value of each item on the list and reasons why the Work is incomplete.

1. Contractor’s punch list shall be complete and shall cover the entire contract scope, unless previously identified within the contract documents that the project will be completed in phases.

2. Upon receipt of Contractor’s punch list of incomplete items, depending on the amount of remaining finish work, Architect/Engineer may begin generating their own punch list. If the Architect/Engineer determines that the Contractor’s punch list is significantly deficient or contains a significant amount of unfinished work to meet substantial completion, Architect/Engineer will formally notify the Contractor accordingly with no further action. Contractor shall continue to complete unfinished work until the Architect/Engineer determines that Substantial Completion has been met.

3. Any time and expenses incurred by the Architect/Engineer to re-review completeness of Contractor’s work to determine Substantial Completion has been met, shall be at the Contractor’s expense.

B. Submittals Prior to Substantial Completion: Complete the following a minimum of 14 days prior to requesting inspection for determining date of Substantial Completion. List items below that are incomplete at time of request.

1. Certificates of Release: Obtain and submit releases from authorities having jurisdiction permitting Owner unrestricted use of the Work and access to services and utilities. Include occupancy permits, operating certificates, and similar releases.

2. Submit closeout submittals specified in other Division 01 Sections, including but not limited to project record documents, operation and maintenance manuals, final completion construction photographic documentation, damage or settlement surveys, property coordinate mapping surveys, and similar final record information.

3. Submit closeout submittals specified in individual Divisions 02 through 33 Sections, including specific warranties, workmanship bonds, maintenance service agreements, final certifications, and similar documents.

4. Submit maintenance material submittals specified in individual Divisions 02 through 33 Sections, including tools, spare parts, extra materials, and similar items, and deliver to location designated by Owner. Labels must clearly identify what the maintenance material is for what piece equipment, with manufacturer's name and model number where applicable.

   a. Schedule of Maintenance Material Items: Prepare and submit schedule of maintenance material submittal items, including name and quantity of each item and name and number of related Specification Section. Obtain Owner signature for receipt of submittals.

5. Submit a statement that all air flush-out procedures were performed. Include process used and dates when flush-out was started and completed. Filtration media must be replaced after flush-out process was completed. If procedure was performed prior to dust creating work was complete, Contractor must perform an additional process.

6. Submit test/adjust/balance records.

7. Submit systems curves for air and water systems,

8. Submit sustainable design submittals required in Division 01 sustainable design requirements Section and in individual Division 02 through 33 Sections.

9. Submit changeover information related to Owner's occupancy, use, operation, and maintenance.

C. Procedures Prior to Substantial Completion: Complete the following a minimum of 14 days prior to requesting inspection for determining date of Substantial Completion. List items below that are incomplete at time of request.

1. Advise Owner of pending insurance changeover requirements.

2. Make final changeover of permanent locks and deliver keys to Owner. Advise Owner's personnel of changeover in security provisions.

3. Complete startup and testing of systems and equipment.

4. Perform air flush-out procedures and replace filtration media after flush-out of the building's systems. Replace all filters.

5. Perform adjustments and balancing of systems, provide reports

6. Perform preventive maintenance on equipment and systems used prior to Substantial Completion, regardless if the equipment was existing. Advise Owner of changeover in heat and other utilities.

7. Conduct inspection and walkthrough with local authorities having jurisdiction.

8. Terminate and remove temporary facilities from Project site, along with mockups, construction tools, and similar elements.

9. Remove temporary fencing.

    a. Power wash all Owner supplied scrim. Let dry and neatly roll/fold scrim and deliver to Owner's designated storage location.

10. Complete final cleaning requirements, including touchup painting.

11. Touch up and otherwise repair and restore marred exposed finishes to eliminate visual defects.

12. Provide as-built documentation of changes made in the field or in cases where no field changes occurred, certified statement from the trade contractor documenting such.

    a. Contractor shall remain responsible for costs that may occur should existing conditions be found that are not reflected within the as-built documents provided for closeout.

13. All surveys and survey information as outlined within quality control of Division One.

    a. Should the Contractor fail during the course of the work to have licensed survey of required coordinate points and document information outlined within the contract documents, Owner shall have such work performed by others, at the Contractors expense.

D. Inspection: Submit a written request for inspection to determine Substantial Completion a minimum of 14 days prior to date the work will be completed and ready for final inspection and tests. On receipt of request, Architect/Engineer will either proceed with inspection or notify Contractor of unfulfilled requirements. Architect/Engineer will prepare the Certificate of Substantial Completion after inspection or will notify Contractor of items, either on Contractor's list or additional items identified by Architect/Engiener, that must be completed or corrected before certificate will be issued.

1. Reinspection: Request reinspection when the Work identified in previous inspections as incomplete is completed or corrected.

2. Results of completed inspection will form the basis of requirements for final completion.

1.07 FINAL COMPLETION PROCEDURES

A. Submittals Prior to Final Completion: Before requesting final inspection for determining final completion, complete the following:

1. Instruct Owner's personnel in operation, adjustment, and maintenance of products, equipment, and systems. Submit demonstration and training video recordings as specified in Division 01 Section "Demonstration and Training."

2. Submit a final Application for Payment request with releases and supporting documentation not previously submitted and accepted. Include certificates of insurance for products and completed operations where required.

3. Submit an updated final Application for Payment statement, accounting for final additional charges to the Contract Sum.

4. Certified List of Incomplete Items: Submit certified copy of Architect/Engineer's Substantial Completion inspection list of items to be completed or corrected (punch list), endorsed and dated by Architect/Engineer. Certified copy of the list shall state that each item has been completed or otherwise resolved for acceptance.

5. Certificate of Insurance: Submit evidence of final, continuing insurance coverage complying with insurance requirements.

6. Submit final meter readings for utilities, a measured record of stored fuel, and similar data as of the date of Substantial Completion, or when the Owner took possession of and responsibility for corresponding elements of the Work.

7. Submit consent of surety to final payment.

8. Submit a final liquidated damages settlement statement.

9. Any attic stock that has been outlined to be provided, shall be acknowledged as received by the Owner. Copy of transmittal listing the material/parts and quantities with Owner signature of acceptance.

10. Pest control inspections and warranty

11. Construction progress photographs

B. Inspection: Submit a written request for final inspection to determine acceptance a minimum of 14 days prior to date the work will be completed and ready for final inspection and tests. On receipt of request, Architect/Engineer will either proceed with inspection or notify Contractor of unfulfilled requirements. Architect/Engineer will prepare a final Certificate for Payment after inspection or will notify Contractor of construction that must be completed or corrected before certificate will be issued.

1. Reinspection: Request reinspection when all the Work identified in previous inspections as incomplete is completed or corrected.

2. Upon completion of reinspection, the Owner with advice of the Architect/Engineer will prepare a Certificate of Final Acceptance, or advise the Contractor of Work that is incomplete or of obligations that have not been fulfilled but are required for final acceptance.

3. If necessary, reinspection will be repeated at the Contractor's expense.

1.08 LIST OF INCOMPLETE ITEMS (PUNCH LIST)

A. Organization of List: Include name and identification of each space and area affected by construction operations for incomplete items and items needing correction including, if necessary, areas disturbed by Contractor that are outside the limits of construction.

1. Organize list of spaces in sequential order.

2. Organize items applying to each space by major element, including categories for ceiling, individual walls, floors, equipment, and building systems.

3. Include the following information at the top of each page:

a. Project name.

b. Date.

c. Name of Architect/Engineer.

d. Name of Contractor.

e. Page number.

4. Submit list of incomplete items in the following format or format approved by Owner:

a. PDF electronic file. Architect will return annotated file.

1.09 WARRANTY RESPONSE REQUIREMENTS

A. Related Damages and Losses: When correcting warranted Work that has failed, remove and replace other Work that has been damaged as a result of such failure or that must be removed and replaced to provide access for correction of warranted Work.

B. Reinstatement of Warranty: When Work covered by a warranty has failed and been corrected by replacement or rebuilding, reinstate the warranty by written endorsement. The reinstated warranty shall be equal to the original warranty with an equitable adjustment for depreciation.

C. Replacement Cost: Upon determination that Work covered by a warranty has failed, replace or rebuild the Work to an acceptable condition complying with requirements of Contract Documents. The Contractor is responsible for the cost of replacing or rebuilding defective Work regardless of whether the Owner has benefited from use of the Work through a portion of its anticipated useful service life.

D. Owner's Recourse: Written warranties made to the Owner are in addition to implied warranties, and shall not limit the duties, obligations, rights and remedies otherwise available under the law, nor shall warranty periods be interpreted as limitations on time in which the Owner can enforce such other duties, obligations, rights, or remedies. Rejection of Warranties: The Owner reserves the right to reject warranties and to limit selections to products with warranties not in conflict with requirements of the Contract Documents.

E. The Owner reserves the right to refuse to accept Work for the Project where a special warranty, certification, or similar commitment is required on such Work or part of the Work, until evidence is presented that entities required to countersign such commitments are willing to do so.

1.10 SUBMITTAL OF PROJECT WARRANTIES

A. Time of Submittal: Submit written warranties on request of Architect/Engineer for designated portions of the Work where commencement of warranties other than date of Substantial Completion is indicated, or when delay in submittal of warranties might limit Owner's rights under warranty.

B. All work shall be covered by the standard one (1) year guarantee as set forth in the General Conditions. The Contractor with his subcontractors shall visit the project site at 11 months into the guarantee period to determine with the Owner the scope of any required guarantee work. The Contractor shall contact the Owner and Architect/Engineer for scheduling so that the Owner and Architect/Engineer can attend.

C. Partial Occupancy: Submit properly executed warranties within 15 days of completion of designated portions of the Work that are completed and occupied or used by Owner during construction period by separate agreement with Contractor.

D. Specific requirements for warranties for the Work and products and installations that are specified to be warrantee are included in the individual Sections of Divisions 2 through 33.

E. Disclaimers and limitations: Manufacturer’s disclaimers and limitations on product warranties do not relieve the Contractor of the warranty on the Work that incorporates the products, nor does it relieve suppliers, manufacturers, and subcontractors required to countersign special warranties with the Contractor.

F. Organize warranty documents into an orderly sequence based on the table of contents of Project Manual.

1. Organize based on the format outlined within the Owners closeout check list. Provide two hardcopies complete draft for AE reviews. Submit one final electronic document as final

2. Address to: Office of University Planning, Design, and Construction, University of Connecticut Box Unit-3038, Storrs, Connecticut 06269-3038

3. Provide heavy paper dividers with plastic-covered tabs for each separate warranty. Mark tab to identify the product or installation. Provide a typed description of the product or installation, including the name of the product and the name, address, and telephone number of Installer.

4. Identify each binder on the front and spine with the typed or printed title "WARRANTIES," Project name and number, and name of Contractor.

5. Warranty Electronic File: Scan warranties and bonds and assemble complete warranty and bond submittal package into a single indexed electronic PDF file with links enabling navigation to each item. Provide bookmarked table of contents at beginning of document and contact information for each warrantee including extended warrantees. Define distinct warrantee coverage and contact information for each warrantee.

6. All required guarantees/warranties will be by the respective company made out to the Owner.

7. All guarantees/warranties supplied by subcontractors or manufacturers shall be countersigned by the Contractor.

G. Provide additional copies of each warranty to include in operation and maintenance manuals.

1.11 REVENUE SERVICES REQUIREMENTS

A. Upon receipt of the Certificate of Substantial Completion, the Contractor shall submit the following information required by the Connecticut Department of Revenue Services.

1. The identity and addresses of all subcontractors performing work on the project.

2. The Connecticut tax registration numbers of the Contractor and all subcontractors.

3. The Federal Social Security account numbers, or Federal Employer Identification numbers, or both, if applicable, for the General Contractor and all subcontractors.

4. Include a copy of the transmittal sent to the Department of Revenue on project contacts information that is to be included within the closeout manual.

PART 2 – PRODUCTS

2.01 MATERIALS

A. Cleaning Agents: Use cleaning materials and agents recommended by manufacturer or fabricator of the surface to be cleaned. Do not use cleaning agents that are potentially hazardous to health or property or that might damage finished surfaces.

1. Use cleaning products that comply with Green Seal's GS-37, or if GS-37 is not applicable, use products that comply with the California Code of Regulations maximum allowable VOC levels.

PART 3 – EXECUTION

3.01 FINAL CLEANING

A. General: Perform final cleaning. Conduct cleaning and waste-removal operations to comply with local laws and ordinances and Federal and local environmental and antipollution regulations.

B. Cleaning: Employ experienced workers or professional cleaners for final cleaning. Clean each surface or unit to condition expected in an average commercial building cleaning and maintenance program. Comply with manufacturer's written instructions.

1. Complete the following cleaning operations before requesting inspection for certification of Substantial Completion for entire Project or for a designated portion of Project:

a. Clean Project site, yard, and grounds, in areas disturbed by construction activities, including landscape development areas, of rubbish, waste material, litter, and other foreign substances.

b. Clean catch basins affected by construction activities.

c. Sweep paved areas broom clean. Remove petrochemical spills, stains, and other foreign deposits.

d. Rake grounds that are neither planted nor paved to a smooth, even-textured surface.

e. Remove tools, construction equipment, machinery, and surplus material from Project site.

f. Remove snow and ice to provide safe access to building.

g. Clean exposed exterior and interior hard-surfaced finishes to a dirt-free condition, free of stains, films, and similar foreign substances.

Avoid disturbing natural weathering of exterior surfaces. Restore reflective surfaces to their original condition.

h. Vacuum carpet and similar soft surfaces, removing debris and excess nap; clean according to manufacturer's recommendations if visible soil or stains remain.

i. Clean transparent materials, including mirrors and glass in doors and windows. Remove glazing compounds and other noticeable, vision-obscuring materials. Polish mirrors and glass, taking care not to scratch surfaces.

j. Remove labels that are not permanent.

k. Clean and polish tile and other glazed surfaces affected by construction activity.

l. Clean and polish finish hardware affected by construction activity.

m. Clean exposed surfaces of diffusers, registers, and grills affected by construction activity.

n. Replace all filters of equipment and systems used during construction.

o. Clean light fixtures, lamps, globes, and reflectors to function with full efficiency that were affected by construction activity.

p. Leave Project clean and ready for occupancy.

q. Remove all sediment control for catch basins and fully clean out catch basin.

C. Pest Control: Comply with pest control requirements in Division 01 Section "Temporary Facilities and Controls." Prepare written report.

D. Removal of Protection: Remove temporary protection and facilities installed for protection of the Work during construction.

E. Compliance: Comply with regulations of authorities having jurisdiction and safety standards for cleaning. Do not burn waste materials. Do not bury debris or excess materials on the Owner’s property. Do not discharge volatile, harmful or dangerous materials into drainage systems. Remove waste materials from the site and dispose of in a lawful manner.

1. Where extra materials of value remaining after completion of associated Work have become the Owner’s property, arrange for disposition of these materials as directed.

3.02 REPAIR OF THE WORK

A. Complete repair and restoration operations before requesting inspection for determination of Substantial Completion.

B. Repair or remove and replace defective construction. Repairing includes replacing defective parts, refinishing damaged surfaces, touching up with matching materials, and properly adjusting operating equipment. Where damaged or worn items cannot be repaired or restored, provide replacements. Remove and replace operating components that cannot be repaired. Restore damaged construction and permanent facilities used during construction to specified condition.

1. Remove and replace chipped, scratched, and broken glass, reflective surfaces, and other damaged transparent materials.

2. Touch up and otherwise repair and restore marred or exposed finishes and surfaces. Replace finishes and surfaces that that already show evidence of repair or restoration.

a. Do not paint over "UL" and other required labels and identification, including mechanical and electrical nameplates. Remove paint applied to required labels and identification.

3. Replace parts subject to operating conditions during construction that may impede operation or reduce longevity.

4. Replace burned-out bulbs, bulbs noticeably dimmed by hours of use, and defective and noisy starters in fluorescent and mercury vapor fixtures to comply with requirements for new fixtures.

3.03 CERTIFICATIONS

A. The Contractor, at completion of construction, shall provide to the Owner on company letter head a “Certificate of Substantial Compliance” bearing original signatures of an officer of the company reflecting the following:

1. Address to: University of Connecticut c/o University Master Planner and Chief Architect, Planning Architectural and Engineering Services, 31 LeDoyt Road, Storrs, CT 06269-3038;

2. Identify the Project number and Project Name;

3. Project’s Description of work: As represented within Division 01 Section 1000 Summary.

4. Certification Statement:

5. I, the undersigned, am the official authorized agent to execute contracts on behalf of (insert official legal name of contracting Company). I certify that (insert official legal name of contracting Company) pursuant to the statutory and contractual requirements applied to this Project, CERTIFY that, in my

professional opinion, the complete structure/renovations described above is in substantial compliance with the approved construction documents on file with the University of Connecticut. Minor deviations and special stipulations are noted below (if any, list)".

6. The above statement is Sworn as True to the best of my knowledge and belief, subject to the penalties of false statement.

7. Print Name of the Authorized Agent:

8. Provide signature of the Authorized Agent:

    a. Date:

    b. Subscribed and acknowledged before me this day of , 2018.

    c. Notary Seal and signature.

B. The Contractor, at completion of construction, shall provide to the Owner on company letter head bearing original signatures of an officer of the company certifying that they will maintain required insurance coverage. Such document shall reflect the following:

1. Address to: University of Connecticut c/o University Master Planner and Chief Architect, Planning Architectural and Engineering Services, 31 LeDoyt Road, Storrs, CT 06269-3038;

2. Identify the Project number and Project Name;

3. Project's Description of work: As represented within Division 01 Section 1000 Summary.

4. Certification Statement:

    a. I, the undersigned, am the official authorized agent to execute contracts on behalf of (insert official legal name of contracting Company). I certify that (insert official legal name of contracting Company) pursuant to the statutory and contractual requirements applied to this Project, shall maintain the contractually required insurance coverage and limits for a period of no less than three (3) years after final payment and final completion of the work.

    b. The above statement is Sworn as True to the best of my knowledge and belief, subject to the penalties of false statement.

    c. Print Name of the Authorized Agent

    d. Provide Signature of the Authorized Agent

    e. Date:

f. Subscribed and acknowledged before me this day of , 2018.

g. Notary Seal and signature.

C. Prior to Owners' approval and acceptance, mechanical and electrical systems shall be fully commissioned by the Contractor and Commissioning Agent (when applicable) and is efficiently operational.

PART 4 – SCHEDULES

4.01 SCHEDULE OF WARRANTIES

A. Schedule: Provide warranties and bonds on products and installations as specified in the following Sections:

1. Section 07920 – Joint Sealants

2. Section 08520 – Aluminum Windows

3. Section 08800 – Glass and Glazing

END OF SECTION

SECTION 01-7823

OPERATION AND MAINTENANCE DATA

PART 1 – GENERAL

1.01 RELATED DOCUMENTS

A. Drawings and general provisions of the Contract, including General and Supplementary Conditions and other Division 01 Specification Sections, apply to this Section.

1.02 SUMMARY

A. Section includes administrative and procedural requirements for preparing operation and maintenance manuals, including the following:

1. Operation and maintenance documentation directory.

2. Emergency procedures and contacts.

3. Operation manuals for systems, subsystems, and equipment.

4. Product maintenance manuals.

5. Systems and equipment maintenance and warrantee manuals.

B. Related Requirements:

1. Division 01 Section "Submittal Procedures" for submitting copies of submittals for operation and maintenance manuals.

2. Divisions 02 through 33 Sections for specific operation and maintenance manual requirements for the Work in those Sections.

1.03 DEFINITIONS

A. System: An organized collection of parts, equipment, or subsystems united by regular interaction.

B. Subsystem: A portion of a system with characteristics similar to a system.

1.04 CLOSEOUT SUBMITTALS

A. Manual Content: Operations and maintenance manual content is specified in individual Specification Sections to be reviewed at the time of Section submittals. Submit reviewed manual content formatted and organized as required by this Section.

1. Architect/Engineer will comment on whether content of operations and maintenance submittals are acceptable.

2. Where applicable, clarify and update reviewed manual content to correspond to revisions and field conditions.

B. Format: Submit operations and maintenance manuals in the following format:

1. PDF electronic file. Assemble each manual into a composite electronically indexed file. Submit on digital media acceptable to Architect/Engineer.

a. Name each indexed document file in composite electronic index with applicable item name. Include a complete electronically linked operation and maintenance directory.

b. Enable inserted reviewer comments on draft submittals.

2. One paper copy, separately bound. Include a complete operation and maintenance directory. Enclose title pages and directories in clear plastic sleeves.

C. Initial Manual Submittal: Submit two draft copies of the manual at least 30 days before commencing demonstration and training. Architect/Engineer and Owner will comment on whether general scope and content of manual are acceptable.

D. Final Manual Submittal: Submit manual in final form prior to requesting inspection for Substantial Completion and at least 15 days before commencing demonstration and training. Architect/Engineer will return copy with comments.

1. Correct or revise the manual to comply with Architect/Engineer's and Owner’s comments. Submit copy of corrected manual within 15 days of receipt of Architect/Engineer's comments and prior to commencing demonstration and training.

PART 2 – PRODUCTS

2.01 OPERATION AND MAINTENANCE DOCUMENTATION DIRECTORY

A. Directory: Prepare a single, comprehensive directory of emergency, operation, and maintenance data and materials, listing items and their location to facilitate ready access to desired information. Include a section in the directory for each of the following:

1. Table of contents.

2. List of all Subcontractors and Suppliers – name, address, contact and federal identification numbers.

3. List of all drawings and their number and title, including all additions and deletions during the course of the project.

4. List of specification section numbers and title.

5. List all redlined as-built documents.

6. List of systems.

7. List of equipment.

B. List of Systems and Subsystems: List systems alphabetically. Include references to operation and maintenance manuals that contain information about each system.

C. List of Equipment: List equipment for each system, organized alphabetically by system. For pieces of equipment not part of system, list alphabetically in separate list.

D. Tables of Contents: Include a table of contents for the emergency, operation, and maintenance manual.

E. Updated List of Subcontractors and Suppliers: List all contractors, subcontractors, sub-tier subcontractors and suppliers who worked on or supplied material to the Project. Include name of the firm, firm's address, firm's contact person, contact phone number, Connecticut registration number and Federal employer identification number (FEIN),

F. Identification: In the documentation directory and in the operation and maintenance manual, identify each system, subsystem, and piece of equipment with same designation used in the Contract Documents. If no designation exists, assign a designation according to ASHRAE Guideline 4, "Preparation of Operating and Maintenance Documentation for Building Systems."

2.02 REQUIREMENTS FOR EMERGENCY, OPERATION, AND MAINTENANCE MANUALS

A. Organization: Unless otherwise indicated, organize each manual into a separate section for each system and subsystem, and a separate section for each piece of equipment not part of a system. Each manual shall contain the following materials, in the order listed:

1. Title page.

2. Table of contents.

3. Manual contents.

B. Title Page: Include the following information:

1. Subject matter included in manual.

2. Name and address of Project.

3. Project Number

4. Name and address of Owner.

5. Date of submittal.

6. Name and contact information for Contractor.

7. Name and contact information for Architect/Engineer.

8. Name and contact information for Commissioning Authority, (if applicable).

9. Names and contact information for major consultants to the Architect/Engineer that designed the systems contained in the manuals.

10. Cross-reference to related systems in other operation and maintenance manuals.

C. Table of Contents: List each product included in manual, identified by product name, indexed to the content of the volume, and cross-referenced to Specification Section number in Project Manual.

1. If operation or maintenance documentation requires more than one volume to accommodate data, include comprehensive table of contents for all volumes in each volume of the set.

D. Manual Contents: Organize into sets of manageable size. Arrange contents alphabetically by system, subsystem, and equipment. If possible, assemble instructions for subsystems, equipment, and components of one system into a single binder.

E. Manuals, Electronic Files: Submit manuals in the form of a multiple file composite electronic PDF file for each manual type required.

1. Electronic Files: Use electronic files prepared by manufacturer where available. Where scanning of paper documents is required, scans shall be in color at 600dpi with searchable capabilities.

2. File Names and Bookmarks: Enable bookmarking of individual documents based on file names. Name document files to correspond to system, subsystem, and equipment names used in manual directory and table of contents. Group documents for each system and subsystem into individual composite bookmarked files, then create composite manual, so that resulting bookmarks reflect the system, subsystem, and equipment names in a readily navigated file tree. Configure electronic manual to display bookmark panel on opening file.

F. Manuals, Paper Copy: Submit manuals in the form of hard copy, bound and labeled volumes.

1. Binders: Heavy-duty, three-ring, vinyl-covered, loose-leaf binders, in thickness necessary to accommodate contents, sized to hold 8-1/2-by-11-

inch paper; with clear plastic sleeve on spine to hold label describing contents and with pockets inside covers to hold folded oversize sheets.

a. If two or more binders are necessary to accommodate data of a system, organize data in each binder into groupings by subsystem and related components. Cross-reference other binders if necessary to provide essential information for proper operation or maintenance of equipment or system.

b. Identify each binder on front and spine, with printed title "OPERATION AND MAINTENANCE MANUAL," Project title or name, and subject matter of contents, and indicate Specification Section number on bottom of spine. Indicate volume number for multiple-volume sets.

2. Dividers: Heavy-paper dividers with plastic-covered tabs for each section of the manual. Mark each tab to indicate contents. Include typed list of products and major components of equipment included in the section on each divider, cross-referenced to Specification Section number and title of Project Manual.

3. Protective Plastic Sleeves: Transparent plastic sleeves designed to enclose diagnostic software storage media for computerized electronic equipment.

4. Supplementary Text: Prepared on 8-1/2-by-11-inch white bond paper.

5. Operations and Maintenance Drawings: Attach reinforced, punched binder tabs on drawings and bind with text.

a. If oversize drawings are necessary, fold drawings to same size as text pages and use as foldouts.

b. If drawings are too large to be used as foldouts, fold and place drawings in labeled envelopes and bind envelopes in rear of manual. At appropriate locations in manual, insert typewritten pages indicating drawing titles, descriptions of contents, and drawing locations.

2.03 EMERGENCY PROCEDURES TO BE INCLUDED IN O&M MANUALS

A. Content: Organize manual into a separate section for each of the following:

1. Type of emergency.

2. Emergency instructions.

3. Emergency procedures.

B. Type of Emergency: Where applicable for each type of emergency indicated below, include instructions and procedures for each system, subsystem, piece of equipment, and component:

1. Fire.

2. Flood.

3. Gas leak.

4. Water leak.

5. Power failure.

6. Water outage.

7. System, subsystem, or equipment failure.

8. Chemical release or spill.

C. Emergency Instructions: Describe and explain warnings, trouble indications, error messages, and similar codes and signals. Include responsibilities of Owner's operating personnel for notification of Installer, supplier, and manufacturer to maintain warranties.

D. Emergency Procedures: Include the following, as applicable:

1. Instructions on stopping.

2. Shutdown instructions for each type of emergency.

3. Operating instructions for conditions outside normal operating limits.

4. Required sequences for electric or electronic systems.

5. Special operating instructions and procedures.

2.04 OPERATION MANUALS

A. Content: In addition to requirements in this Section, include operation data required in individual Specification Sections and the following information:

1. System, subsystem, and equipment descriptions. Use designations for systems and equipment indicated on Contract Documents.

2. Performance and design criteria if Contractor has delegated design responsibility.

3. Operating standards.

4. Operating procedures.

5. Operating logs.

6. Wiring diagrams.

7. Control diagrams.

8. Piped system diagrams.

9. Precautions against improper use.

10. License requirements including inspection and renewal dates.

B. Descriptions: Include the following:

1. Product name and model number. Use designations for products indicated on Contract Documents.

2. Manufacturer's name.

3. Equipment identification with serial number of each component.

4. Equipment function.

5. Operating characteristics.

6. Limiting conditions.

7. Performance curves.

8. Engineering data and tests.

9. Complete nomenclature and number of replacement parts.

C. Operating Procedures: Include the following, as applicable:

1. Startup procedures.

2. Equipment or system break-in procedures.

3. Routine and normal operating instructions.

4. Regulation and control procedures.

5. Instructions on stopping.

6. Normal shutdown instructions.

7. Seasonal and weekend operating instructions.

8. Required sequences for electric or electronic systems.

9. Special operating instructions and procedures.

D. Systems and Equipment Controls: Describe the sequence of operation, and diagram controls as installed.

E. Piped Systems: Diagram piping as installed, and identify color-coding where required for identification.

2.05 PRODUCT MAINTENANCE MANUALS

A. Content: Organize manual into a separate section for each product, material, and finish. Include source information, product information, maintenance procedures, repair materials and sources, and warranties and bonds, as described below.

B. Source Information: List each product included in manual, identified by product name and arranged to match manual's table of contents. For each product, list name, address, and telephone number of Installer or supplier and maintenance service agent, and cross-reference Specification Section number and title in Project Manual and drawing or schedule designation or identifier where applicable.

C. Product Information: Include the following, as applicable:

1. Product name and model number.

2. Manufacturer's name.

3. Color, pattern, and texture.

4. Material and chemical composition.

5. Reordering information for specially manufactured products.

D. Maintenance Procedures: Include manufacturer's written recommendations and the following:

1. Inspection procedures.

2. Types of cleaning agents to be used and methods of cleaning.

3. List of cleaning agents and methods of cleaning detrimental to product.

4. Schedule for routine cleaning and maintenance.

5. Repair instructions.

E. Repair Materials and Sources: Include lists of materials and local sources of materials and related services.

F. Warranties and Bonds: Include copies of warranties and bonds and lists of circumstances and conditions that would affect validity of warranties or bonds.

1. Include procedures to follow and required notifications for warranty claims.

2.06 SYSTEMS AND EQUIPMENT MAINTENANCE MANUALS

A. Content: For each system, subsystem, and piece of equipment not part of a system, include source information, manufacturers' maintenance documentation, maintenance procedures, maintenance and service schedules, spare parts list and source information, maintenance service contracts, and warranty and bond information, as described below.

B. Source Information: List each system, subsystem, and piece of equipment included in manual, identified by product name and arranged to match manual's table of contents. For each product, list name, address, and telephone number of Installer or supplier and maintenance service agent, and cross-reference Specification Section number and title in Project Manual and drawing or schedule designation or identifier where applicable.

C. Manufacturers' Maintenance Documentation: Manufacturers' maintenance documentation including the following information for each component part or piece of equipment:

1. Standard maintenance instructions and bulletins.

2. Drawings, diagrams, and instructions required for maintenance, including disassembly and component removal, replacement, and assembly.

3. Identification and nomenclature of parts and components.

4. List of items recommended to be stocked as spare parts.

D. Maintenance Procedures: Include the following information and items that detail essential maintenance procedures:

1. Test and inspection instructions.

2. Troubleshooting guide.

3. Precautions against improper maintenance.

4. Disassembly; component removal, repair, and replacement; and reassembly instructions.

5. Aligning, adjusting, and checking instructions.

6. Demonstration and training video recording, if available.

E. Maintenance and Service Schedules: Include service and lubrication requirements, list of required lubricants for equipment, and separate schedules for preventive and routine maintenance and service with standard time allotment.

1. Scheduled Maintenance and Service: Tabulate actions for daily, weekly, monthly, quarterly, semiannual, and annual frequencies.

2. Maintenance and Service Record: Include manufacturers' forms for recording maintenance.

F. Spare Parts List and Source Information: Include lists of replacement and repair parts, with parts identified and cross-referenced to manufacturers' maintenance documentation and local sources of maintenance materials and related services.

G. Maintenance Service Contracts: Include copies of maintenance agreements with name and telephone number of service agent.

H. Warranties and Bonds: Include copies of warranties and bonds and lists of circumstances and conditions that would affect validity of warranties or bonds.

1. Include procedures to follow and required notifications for warranty claims.

PART 3 – EXECUTION

3.01 MANUAL PREPARATION

A. Operation and Maintenance Documentation Directory: Prepare a separate manual that provides an organized reference to emergency, operation, and maintenance manuals.

B. Emergency Manual: Assemble a complete set of emergency information indicating procedures for use by emergency personnel and by Owner's operating personnel for types of emergencies indicated.

C. Product Maintenance Manual: Assemble a complete set of maintenance data indicating care and maintenance of each product, material, and finish incorporated into the Work.

D. Operation and Maintenance Manuals: Assemble a complete set of operation and maintenance data indicating operation and maintenance of each system, subsystem, and piece of equipment not part of a system.

1. Engage a factory-authorized service representative to assemble and prepare information for each system, subsystem, and piece of equipment not part of a system.

2. Prepare a separate manual for each system and subsystem, in the form of an instructional manual for use by Owner's operating personnel.

E. Manufacturers' Data: Where manuals contain manufacturers' standard printed data, include only sheets pertinent to product or component installed. Mark each sheet to identify each product or component incorporated into the Work. If data include more than one item in a tabular format, identify each item using appropriate references from the Contract Documents. Identify data applicable to the Work and delete references to information not applicable.

1. Prepare supplementary text if manufacturers' standard printed data are not available and where the information is necessary for proper operation and maintenance of equipment or systems.

F. Drawings: Prepare drawings supplementing manufacturers' printed data to illustrate the relationship of component parts of equipment and systems and to illustrate control sequence and flow diagrams. Coordinate these drawings with information contained in record Drawings to ensure correct illustration of completed installation.

1. Project record documents shall only be used as a supplement to the manufacturers documentation as part of operation and maintenance manuals.

2. Comply with requirements of newly prepared record Drawings in Division 01 Section "Project Record Documents."

G. Comply with Division 01 Section "Closeout Procedures" for schedule for submitting operation and maintenance documentation.

END OF SECTION

SECTION 01-7839

PROJECT RECORDING DOCUMENTS

PART 1 – GENERAL

1.01 RELATED DOCUMENTS

A. Drawings and general provisions of the Contract, including General and Supplementary Conditions and other Division 01 Specification Sections, apply to this Section.

1.02 SUMMARY

A. Section includes administrative and procedural requirements for documenting changes to the project contract documents, including the following:

1. Redlined Drawings.
2. Redlined Specifications.
3. Redlined Product Data.
4. Miscellaneous redlined submittals.
5. Measured As-built Drawings

B. Related Requirements:

1. Division 01 Section "Closeout Procedures" for general closeout procedures.
2. Division 01 Section "Operation and Maintenance Data" for operation and maintenance manual requirements.
3. Divisions 02 through 33 Sections for specific requirements for project record documents of the Work in those Sections.

1.03 CLOSEOUT SUBMITTALS

A. Redlined Drawings: Comply with the following:

1. Number of Copies: Submit copies of Redlined Drawings as follows:

a. Initial Submittal:

(1) Submit one (1) paper-copy set of marked-up redlined prints.

(2) Architect/Engineer will indicate whether general scope of changes, additional information recorded, and quality of drafting are acceptable.

b. Final Submittal:

(1) Submit one (1) paper-copy set of marked-up redlined prints.

(2) Print each drawing, whether or not changes and additional information were recorded.

B. Redlined Specifications: Submit one paper copy of Project's Specifications, including addenda and contract modifications.

C. Redlined Product Data: Submit one paper copy of each submittal.

1. Redlined Product Data is required as part of operation and maintenance manuals. , Submit duplicate marked-up Product Data as a component of the manuals.

D. Miscellaneous Redlined Submittals: See other Specification Sections for miscellaneous record-keeping requirements and submittals in connection with various construction activities. Submit one paper copy of each submittal.

E. Reports: Submit written reports indicating items incorporated into project redlined documents concurrent with progress of the Work, including revisions, concealed conditions, field changes, product selections, and other notations incorporated.

PART 2 – PRODUCTS

2.01 RECORDING CONTRACT DRAWING FIELD CHANGES

A. Field Set Prints: Upon receipt of a conformance set of contract documents from the Architect/Engineer, maintain one set of marked-up redlined paper copies of the Conformance Set Drawings and Conformance Set Specifications as the Field Set. Changes occurring during construction shall be documented in a single paper Field Set maintained in good order at the project site.

1. Preparation: Mark field set prints to show where installation varies from that shown originally. Require individual or entity who document the change, whether installer, subcontractor, or similar entity, to provide information for corresponding marked-up redlined set of prints.

a. Give particular attention to information on concealed elements that would be difficult to identify or measure and record later.

b. Record information in an acceptable drawing technique.

c. Record data as soon as possible but not later than one (1) week after the change has been completed.

d. Record and check the markup before enclosing concealed installations.

e. Cross-reference relined prints to corresponding archive photographic documentation.

2. Content: Types of items requiring redlined marking include, but are not limited to, the following:

a. Dimensional changes to Drawings.

b. Revisions to details shown on Drawings.

c. Depths of foundations below first floor.

d. Locations and depths of underground utilities.

e. Revisions to routing of piping and conduits.

f. Revisions to electrical circuitry.

g. Equipment locations.

h. Duct size and routing.

i. Locations of concealed internal utilities.

j. Diagrammatic flow changes and routings

k. Changes made by Change Order or Construction Change Directive.

l. Changes made following Architect's ASIs, PRs, and Bulletins.

m. Details not on the original Contract Drawings.

n. Changes made by coordination drawings

o. Updates to any schedules including but not limited to: equipment schedules, lighting schedules, hardware schedules, security controls schedules,

p. Field conditions for variable and concealed conditions.

q. Record information on the Work that is shown only schematically.

3. Mark the Field Set Drawings and Shop Drawings completely and accurately. Use personnel proficient at recording graphic information in production of redlined prints.

4. Mark field sets with erasable, red-colored pencil. Use other colors to distinguish between changes for different categories of the Work at same location, not limited to utilities.

5. Mark important additional information that was either shown schematically or omitted from original Drawings.

6. Note Construction Change Directive numbers, alternate numbers, Change Order numbers, and similar identification, where applicable.

B. Format: Identify and date each redline drawing; include the designation "PROJECT REDLINE DRAWING" in a prominent location.

1. Redline Prints: Organize redline prints into manageable sets. Bind each set with durable paper cover sheets. Include identification on cover sheets.

2. Identification: As follows:

a. Project name.

b. Date.

c. Designation "PROJECT RECORD DRAWINGS."

d. Name of Architect and or Construction Manager.

e. Name of Contractor.

2.02 REDLINE SPECIFICATIONS

A. Preparation: Mark Specifications to indicate the actual product installation where installation varies from that indicated in Specifications, addenda, and contract modifications.

1. Give particular attention to information on concealed products and installations that cannot be readily identified and recorded later.

2. Mark copy with the name and model number of products, materials, and equipment furnished, including substitutions and product options selected.

3. Record the name of manufacturer, supplier, Installer, and other information necessary to provide a record of selections made.

4. For each principal product, indicate whether product data has been submitted in operation and maintenance manuals instead of submitted as redlined Product Data.

5. Note related Change Orders and record Drawings where applicable.

B. Format: Submit Redline Specifications as paper copy.

2.03 REDLINED PRODUCT DATA

A. Preparation: Mark Product Data to indicate the actual product installation where installation varies substantially from that indicated in Product Data submittal.

1. Give particular attention to information on concealed products and installations that cannot be readily identified and recorded later.

2. Include significant changes in the product delivered to Project site and changes in manufacturer's written instructions for installation.

3. Note related Change Orders and Change Management Documents provided by the Architect/Engineer where applicable.

B. Format: Submit redlined Product Data as paper copy.

2.04 MISCELLANEOUS CHANGE RECORDING SUBMITTALS

A. Assemble miscellaneous records required by other Specification Sections for miscellaneous record keeping and submittal in connection with actual performance of the Work. Bind or file miscellaneous records and identify each, ready for continued use and reference.

B. Format: Submit miscellaneous record submittals as paper copy.

PART 3 – EXECUTION

3.01 RECORDING AND MAINTENANCE

A. Recording: Maintain one copy of each submittal during the construction period for project reline document purposes. Post changes and revisions to project record documents as they occur; do not wait until end of Project.

B. Maintenance of Relined Documents and Samples: Store redlined documents and Samples in the field office apart from the Contract Documents used for construction. Do not use project relined documents for construction purposes. Maintain documents in good order and in a clean, dry, legible condition, protected from deterioration and loss. Provide access to project record documents for Architect's and Owner Representative’s reference during normal working hours.

END OF SECTION

SECTION 01-7900

DEMONSTRATION AND TRAINING

PART 1 – GENERAL

1.01 RELATED DOCUMENTS

A. Drawings and general provisions of the Contract, including General and Supplementary Conditions and other Division 01 Specification Sections, apply to this Section.

1.02 SUMMARY

A. Section includes administrative and procedural requirements for instructing Owner's personnel, including the following:

1. Demonstration of operation of systems, subsystems, and equipment.

2. Training in operation and maintenance of systems, subsystems, and equipment.

B. Related Requirements:

1. Divisions 02 through 33 Sections for specific requirements for demonstration and training for products in those Sections.

1.03 INFORMATIONAL SUBMITTALS

A. Instruction Program: Submit outline of instructional program for demonstration and training, including a list of training modules and a schedule of proposed dates, times, length of instruction time, and instructors' names for each training module. Include learning objective and outline for each training module.

1. Indicate proposed training modules using manufacturer-produced demonstration and training video recordings for systems, equipment, and products in lieu of video recording of live instructional module.

B. Attendance Record: For each training module, submit list of participants and length of instruction time.

1.04 QUALITY ASSURANCE

A. Facilitator Qualifications: A firm or individual experienced in training or educating maintenance personnel in a training program similar in content and extent to that indicated for this Project, and whose work has resulted in training or education with a record of successful learning performance.

B. Instructor Qualifications: A factory-authorized service representative, complying with requirements in Division 01 Section "Quality Requirements," experienced in operation and maintenance procedures and training.

C. Pre-instruction Conference: Conduct conference at Project site to comply with requirements in Division 01 Section "Project Management and Coordination." Review methods and procedures related to demonstration and training including, but not limited to, the following:

1. Inspect and discuss locations and other facilities required for instruction.

2. Review and finalize instruction schedule and verify availability of educational materials, instructors' personnel, audiovisual equipment, and facilities needed to avoid delays.

3. Review required content of instruction.

4. For instruction that must occur outside, review weather and forecasted weather conditions and procedures to follow if conditions are unfavorable.

1.05 COORDINATION

A. Coordinate instruction schedule with Owner's operations. Adjust schedule as required to minimize disrupting Owner's operations and to ensure availability of Owner's personnel.

B. Coordinate instructors, including providing notification of dates, times, length of instruction time, and course content.

C. Coordinate content of training modules with content of approved emergency, operation, and maintenance manuals. Do not submit instruction program until operation and maintenance data has been reviewed and approved by Architect/Engineer.

PART 2 – PRODUCTS

2.01 INSTRUCTION PROGRAM

A. Program Structure: Develop an instruction program that includes individual training modules for each system and for equipment not part of a system, as required by individual Specification Sections.

B. Training Modules: Develop a learning objective and teaching outline for each module. Include a description of specific skills and knowledge that participant is expected to master. For each module, include instruction for the following as applicable to the system, equipment, or component:

1. Basis of System Design, Operational Requirements, and Criteria: Include the following:

a. System, subsystem, and equipment descriptions.

b. Performance and design criteria if Contractor is delegated design responsibility.

c. Operating standards.

d. Regulatory requirements.

e. Equipment function.

f. Operating characteristics.

g. Limiting conditions.

h. Performance curves.

2. Documentation: Review the following items in detail:

a. Emergency manuals.

b. Operations manuals.

c. Maintenance manuals.

d. Project record documents.

e. Identification systems.

f. Warranties and bonds.

g. Maintenance service agreements and similar continuing commitments.

3. Emergencies: Include the following, as applicable:

a. Instructions on meaning of warnings, trouble indications, and error messages.

b. Instructions on stopping.

c. Shutdown instructions for each type of emergency.

d. Operating instructions for conditions outside of normal operating limits.

e. Sequences for electric or electronic systems.

f. Special operating instructions and procedures.

4. Operations: Include the following, as applicable:

a. Startup procedures.

b. Equipment or system break-in procedures.

c. Routine and normal operating instructions.

d. Regulation and control procedures.

e. Control sequences.

f. Safety procedures.

g. Instructions on stopping.

h. Normal shutdown instructions.

i. Operating procedures for emergencies.

j. Operating procedures for system, subsystem, or equipment failure.

k. Seasonal and weekend operating instructions.

l. Required sequences for electric or electronic systems.

m. Special operating instructions and procedures.

5. Adjustments: Include the following:

a. Alignments.

b. Checking adjustments.

c. Noise and vibration adjustments.

d. Economy and efficiency adjustments.

6. Troubleshooting: Include the following:

a. Diagnostic instructions.

b. Test and inspection procedures.

7. Maintenance: Include the following:

a. Inspection procedures.

b. Types of cleaning agents to be used and methods of cleaning.

c. List of cleaning agents and methods of cleaning detrimental to product.

d. Procedures for routine cleaning

e. Procedures for preventive maintenance.

f. Procedures for routine maintenance.

g. Instruction on use of special tools.

8. Repairs: Include the following:

a. Diagnosis instructions.

b. Repair instructions.

c. Disassembly; component removal, repair, and replacement; and reassembly instructions.

d. Instructions for identifying parts and components.

e. Review of spare parts needed for operation and maintenance.

PART 3 – EXECUTION

3.01 PREPARATION

A. Assemble educational materials necessary for instruction, including documentation and training module. Assemble training modules into a training manual organized in coordination with requirements in Division 01 Section "Operations and Maintenance Data."

B. Set up instructional equipment at instruction location.

3.02 INSTRUCTION

A. Facilitator: Engage a qualified facilitator to prepare instruction program and training modules, to coordinate instructors, and to coordinate between Contractor and Owner for number of participants, instruction times, and location.

B. Engage qualified instructors to instruct Owner's personnel to adjust, operate, and maintain systems, subsystems, and equipment not part of a system.

1. Owner will furnish Contractor with names and positions of participants.

C. Scheduling: Provide instruction at mutually agreed on times. For equipment that requires seasonal operation, provide similar instruction at start of each season.

1. Schedule training with Owner through Owners Representative with at least seven days' advance notice.

D. Training Location and Reference Material: Conduct training on-site in the completed and fully operational facility using the actual equipment in-place. Conduct training using final operation and maintenance data submittals.

E. Cleanup: Collect used and leftover educational materials and give to Owner. Remove instructional equipment. Restore systems and equipment to condition existing before initial training use.

END OF SECTION

SECTION 02-0500

SELECTIVE REMOVALS

PART 1 – GENERAL

1.01 GENERAL REQUIREMENTS

A. Drawings and general provisions of the Contract, including General and Supplementary Conditions and other Division 01 Specification Sections, apply to this Section.

1.02 SCOPE OF WORK

A. Abate hazardous materials associated with this scope of work as shown on the Drawings and as required in subsequent Division 02 sections.

B. GENERAL:

1. Provide interior protection for building occupants where work extends to the interior.

C. MAIN BUILDING ROOF:

1. Remove the gravel surfaced multi-ply built-up roofing and fiberglass insulation. Remove asphalt layer on the existing concrete deck. Remove any associated membrane and metal flashing at curbs, roof edges and rising walls. Remove associated wood blocking.

2. Remove existing drains set in the concrete deck.

3. Cut unused deck penetrations (i.e. steel columns, railing posts) flush with the concrete deck surface. Remove conduits, miscellaneous steel and other equipment scheduled for disposal.

4. Remove existing guardrail and attachments.

5. Temporarily disconnect the rooftop mechanical units as necessary to raise the units to accommodate the increased roof system thickness. Coordinate the shut-off schedule with UConn facilities before disconnecting the units. Temporarily relocate all equipment which must remain operational during construction; coordinate temporary locations with Owner.

6. Steel Platform:

a. Cut the existing steel platform beams from the existing posts; salvage beams for reuse.

b. At the west end of the steel platforms, cut and dispose of the existing posts. Salvage base plate anchors for reuse.

c. At the south platform east end, remove posts.

D. STAIR LOW-SLOPED ROOFS (ALTERNATE 1):

1. Remove the single-ply membrane roof, insulation, and adhered vapor barrier to the concrete deck. Remove asphalt layer on the existing concrete deck. Remove any associated metal and membrane flashing and drain inserts. Notify the Engineer if existing conditions differ.

E. LECTURE HALL WALLS:

1. Remove outer wythe of CMU surrounding equipment platform beams (west wall) to create a new pocket in the CMU wall for the new platform steel beam height.

2. Lecture Hall Window Removal:

a. Remove windows and interior and exterior wood trim, and metal flashing.

b. Remove all existing anchors.

F. STAIR PENTHOUSE WALLS

1. Stair Penthouse Window Removal:

a. Remove windows.

b. Remove all metal flashing, membrane and anchors.

2. Remove the existing vinyl cladding, back-up wall weather barrier, metal flashing and wood blocking to the existing masonry backup wall. Remove down leader.

3. Remove existing steel door and frame.

G. LECTURE HALL SHINGLE ROOF AND GUTTER

1. Remove bottom 5 ft of asphalt shingles and membrane underlayment to expose the existing roof deck.

a. Alternate 2: Remove asphalt shingle roof system and membrane underlayment on the entire roof.

2. Remove metal gutter, gutter straps, down leaders and associated flashing.

1.03 RELATED WORK SPECIFIED ELSEWHERE

A. Section 02 8200 – Selective Hazardous Building Materials Abatement Demolition.

B. Section 02 8213 – Asbestos Abatement.

C. Section 02 8313 – Lead-Based Paint Awareness.

D. Section 02 8416 – Universal Waste Removal and Recycling.

E. Section 02 8432 – PCBs Greater than 50 PPM Remediation.

F. Section 03 0100 – Concrete Deck Repair

G. Section 04 2000 – Unit Masonry.

H. Section 05 5000 – Miscellaneous Metals

I. Section 07 5000 – Thermoplastic Membrane Roofing

J. Section 07 6000 – Sheet Metal Cladding and Flashing

1.04 SUBMITTALS

A. General: Refer to Division 1 for submittal provisions and procedures

B. Coordinate extent of removal work with approved shop drawing submittals required under related sections including field survey information of existing concrete deck conditions, hazardous material abatement, etc.

C. Submit shop drawings showing the following:

1. All existing locations of conduits, mechanical equipment, struts, antennas and satellites.

2. Procedure indicating how all equipment will be removed and stored or temporarily relocated during construction. Note if any shutdowns are required related to this work.

3. Locations for the equipment reinstallation (with modifications) after the work is complete (coordinated with shop drawings required in Section 07 5000 – Thermoplastic Membrane Roofing)

D. Provide a detailed description of the removal process, equipment being used, and any materials required to complete the work for approval. Include procedures and detail drawings for exterior debris chute nets, dust and fume control measures, and temporary partitions.

E. Submit plans, procedures, and details showing the method of support and all necessary shoring or temporary support structures, where required. Shoring and temporary support structure designs to be developed and stamped by Connecticut licensed professional engineer. The shoring shop drawings and calculations must be submitted and approved before the removal can begin.

F. Submit proposed temporary weather protection procedures for all removal work that compromises the building enclosure weather barrier including masonry, roof, and coating removals.

1.05 PRECONSTRUCTION CONFERENCE

A. Attend a preconstruction conference to be held with representatives of the Owner, the Contractor, the Engineer, and all other trades to discuss the work covered under this Section. Review methods and procedures related to removal work, temporary shoring requirements, sequencing and coordination with other trades, protection from damage, etc.

1.06 PROTECTION

A. Protect the existing building, building occupants, building contents, landscaping, and site work against all risks associated with this work. Repair or replace any damage to the satisfaction of the Owner at no additional cost to the Owner.

B. Provide all necessary temporary protection needed to prevent leakage into the building at any time during this project.

C. During the period of the conduct of the work, make a representative reasonably available by phone for emergencies. Phone numbers shall be made available to the Owner's Representative prior to the start of work.

1.07 PROJECT CONDITIONS

A. Maintain the building in a watertight condition at all times during construction.

B. Maintain adequate ventilation.

C. Cover vents, windows, and other locations as needed to protect occupants and public from fumes and dust.

D. Verify all site conditions and dimensions by measurements in the field. Verify existing construction in consideration of the special conditions associated with working in, repairing, and modifying an existing building.

1. Notify the Engineer immediately of any inconsistencies between field conditions and those shown in the Contract Drawings. The Engineer will determine what modifications or additional repairs are necessary.

2. Plans and dimensions under which the work is to be performed are based on the available drawings of the existing conditions and are presented for information only. No additional compensation or time extension will be made for dimensional errors or discoverable inaccuracies about existing conditions in the Contract Documents.

E. Remove all tools, buckets, and materials from work areas and store neatly at a central location daily at the end of work.

F. Do not stockpile materials, debris, or equipment on the roof.

G. Protect the building and its contents from all risks associated with the work in this Section. Schedule and execute all work without exposing adjacent building areas to

water, dust, debris, or materials used by this Contractor. Protect adjacent areas from damage and stains with appropriate barriers and masking. Repair all damage that results from the work of this Section to its condition at the start of work or, if such cannot be determined, to its original condition. Clean all stains by approved means.

H. Compliance with OSHA and all other safety laws and regulations is the exclusive responsibility of the Contractor, its Subcontractors, suppliers, and consultants.

I. Follow the approved dust- and fume-control plan.

1.08 QUALITY CONTROL AND QUALITY ASSURANCE

A. Perform all work in strict accordance with all applicable laws and regulations of the building code and with all other authorities having jurisdiction. All such requirements shall take precedence over the requirements of the Specifications except where the requirements of the Specifications are more exacting or stringent.

B. Inspection: Provide Engineer access to the site to perform inspection of complete removal areas. Repair and reinstallation work cannot begin until Engineer has completed inspection and any issues identified addressed.

C. The Contractor shall conduct a quality control program that includes, but is not limited to, the following:

1. Inspection of all materials to ensure that they conform to contract requirements and that all materials are new and undamaged.

2. Establishment of procedures for executing the work.

3. Confirmation that all required shoring is in place prior to beginning any removal work.

4. Inspection of work in progress to ensure that work is being done in accordance with established procedures and specific instructions, if given by the Engineer.

5. Periodic inspection of removal areas to confirm removals are not damaging existing materials to remain.

6. Inspection of temporary protection required to maintain building weathertightness and to protect workers.

1.09 PERFORMANCE REQUIREMENTS – ELECTRICAL AND MECHANICAL WORK

A. Request inspections from authorities having jurisdiction, and obtain all permits as applicable and/or required.

B. Unless otherwise specified or indicated, materials and workmanship and equipment performance shall conform with the latest edition of the following standards, codes, specifications, requirements and regulations:

1. State Building Code

2. State Electrical Code

3. National Fire Protection Association (NFPA)

4. Local Town Regulations and By-laws

5. Underwriter's Laboratories, Inc. (UL)

6. National Electrical Manufacturer's Association (NEMA)

7. American National Standards Institute (ANSI)

C. The arrangement of all electrical work shown on the Drawings is diagrammatic only. Conditions at the building including actual measurements shall determine the details of the installation. All work shall be laid out and installed so as to require the least amount of cutting and patching, to limit penetrations to flashings, and to meet code requirements.

D. All work to be performed by licensed mechanic in the appropriate trade.

PART 2 – PRODUCTS

2.01 EQUIPMENT

A. Removal Equipment: Use concrete saw, chipping hammers, and other removal equipment and cutting tools appropriate for the work and approved by the Engineer.

PART 3 – EXECUTION

3.01 EXAMINATION

A. Verify all site conditions by field measurements in consideration of the special conditions associated with reconstruction prior to development of Shop Drawings or submittals. Notify the Engineer immediately of any inconsistency between conditions found and those shown on the Contract Drawings or if issues impacting code compliant installation.

3.02 STRUCTURAL FRAMING OR LOAD BEARING WALL REMOVAL

A. Connecticut Licensed Professional Engineer to examine and document existing conditions prior to beginning removal work. Submit plan to support structure and provide secondary load path as required during removal work. Use care not to overload surrounding structure or leave structure unsupported. Plan to include sequence drawings for shoring and permanent structure installation in relation to removal work. Shoring to comply with all Connecticut State Building code requirements.

3.03 MISCELLANEOUS MASONRY REMOVAL

A. Remove and dispose of CMU masonry as shown. Saw cut masonry at perimeter of areas scheduled for removal; use care not to damage surrounding masonry scheduled to remain. Cut line must be plumb and true.

3.04 WINDOW REMOVAL

A. Contractor to only remove and infill as many windows as can be fully infilled before work ends for the day. In the event that windows that are removed are not infilled in the same day:

1. If there is no rain forecasted until the next working day and if there are no wind speeds greater than 15 mph forecasted until the next working day, then the Contractor is to provide temporary protection for windows that is watertight and can resist wind loads up to 15 mph.

2. If rain or wind speed greater than 15 mph is forecasted within the next working day, the Contractor may not use temporary protection for windows and must reinstall the existing window in the opening and provide watertight seals.

B. Use care not to damage surrounding masonry, wood trim, wood blocking or finishes to remain. Openings to be plumb and true when removal complete.

C. Remove all associated flashing and anchors.

3.05 ROOFING, FLASHING AND GUTTER REMOVAL

A. Remove roofing membrane, insulation, cover board, vapor retarder, metal and membrane flashing, and associated wood blocking.

B. Carefully unlock joints at connection to existing flashing to remain and bend up as necessary to remove adjacent metal flashing and roofing. Take care not to break existing solder joints or metal flashing.

C. Clean existing decks to remain of all built-up roof debris that may interfere with the installation of the membrane roof.

D. Do not damage the existing roof deck and adjacent building components. Repair or replace all damaged items at no cost to the Owner. Consult with the Engineer, who will determine a repair or replacement procedure.

3.06 ROOF DRAIN AND PIPING REMOVAL

A. Coordinate extent of removals with shop drawings submitted under Section 07 5000 – Thermoplastic Membrane Roofing

B. Coordinate roof drain removal with adjacent roofing work. Complete drain removal and replacement in one day or provide temporary drainage provisions for each roof

area to prevent ponding. If drain removal to remain overnight, provide temporary waterproofing over drain opening to prevent leakage.

C. Remove adjacent concrete deck as required to seat roof drain; notify Engineer if depth of concrete removal must exceed 2 inches or if the removal requires cutting of any embedded reinforcement. Do not cut or remove reinforcement without written approval from the Engineer.

3.07 REMOVAL ROOF-MOUNTED EQUIPMENT

A. Perform mechanical and electrical work using licensed mechanics, for necessary removal/relocation of rooftop equipment. Provide the Owner with reasonable advanced notice of shutdowns and conform to scheduling requirements of the Owner. Coordinate with reinstallation in Section 07 5000 – Thermoplastic Membrane Roofing.

B. Coordinate work to allow roofing reconstruction to proceed unimpeded.

C. The Contractor's Superintendent shall be on site when equipment is being removed, replaced, or reinstalled on the roof.

D. Mechanical Work Prior to Removal: Verify the operating condition of all mechanical equipment of rooftop units. Submit a written report and Shop Drawings to the Owner of the existing conditions.

E. Electrical Work Prior to Removal: Disconnect and tag all power wiring and control wiring to all rooftop units that are to be disconnected and reconnected.

3.08 INTERIOR FINISH REMOVAL

A. Remove interior finishes as shown on the Drawings. Store interior fixtures (blinds, etc.) for reinstallation and reinstall using same methods when work is complete.

B. Provide temporary support of work to be cut or removed, as necessary.

C. Cut, move, or remove items as necessary for access to Work; replace and restore at completion.

1. Protect other work during Work of this Section to prevent damage. Provide protection from adverse weather conditions that part of the project that may be exposed during cutting and patching operations.

2. Avoid interference with use of adjoining areas or interruption of free passage to adjoining areas.

D. Take precaution not to cut existing pipe, conduit, or ducts, which are serving the building, until provisions have been made to bypass them.

E. Whenever possible, employ the installing mechanics for cutting or disassembly. When unavailable, use journeymen skilled in such work.

F. Layout cuts and prepare openings consistent with good installation practice. Plan for use of whole components to facilitate restoration according to natural or customary joint lines.

G. Install products as specified in individual Sections.

H. Do not damage adjacent components scheduled to remain; repair or replace damaged building components at no cost to Owner. Consult with the Engineer, who will determine a repair or replacement procedure.

END OF SECTION

SECTION 02-8200

SELECTIVE HAZARDOUS BUILDING MATERIALS ABATEMENT DEMOLITION

PART 1 - GENERAL

1.01 SUMMARY

A. Provide selective demolition to remove interior/exterior wall/window/door systems and as needed existing ceilings/ walls/ roofing/ siding/ masonry/ stone/ brick/ soffits/ transite/ HVAC systems/ mechanical units/ etc. as necessary to access all asbestos-containing materials/lead-based paint/PCBs as specified herein, and as required for complete and proper abatement/remediation.

B. Provide demolition necessary to perform asbestos/lead-based paint/hazardous materials abatement/PCBs. Please note there are several layers of materials requiring demolition to access all hazardous building materials, some of which are contaminated and require disposal as such.

C. Required permits shall be obtained by the Contractor at no additional cost to the Owner.

D. Notes: Contractor is responsible for removing all asbestos containing materials/lead-based paint/PCBs in demolition/renovation/re-roofing areas as noted by the architect's specifications and drawings.

E. Demolition or moving typical non-movable objects by the abatement contractor may be required to gain access to all materials to be removed. MSD sheets for chemicals to be used during the project must be submitted to the owners' representative prior to site delivery.

F. Related Sections:

1. Section 02-8213 – Asbestos Abatement

2. Section 02-8313 – Lead-Based Paint Awareness

3. Section 02-8416 – Universal Waste Removal and Recycling

4. Section 02-8432 – PCBs Assumed Greater than 50 PPM Sealant Abatement

5. HBM-01 – Hazardous Building Materials Abatement Drawing

1.02 PROJECT CONDITIONS

A . Occupancy:

1 Areas of the buildings in which demolition will occur will be unoccupied during work.

B. Existing Conditions:

1. After the project is begun, the Contractor is responsible for the condition of the structures to be selectively demolished.

2. Unforeseen Conditions: Should unforeseen conditions be encountered that affect design or function of project, investigate and fully submit an accurate, detailed, written report to the office of the Consultant. While awaiting a response, reschedule operations if necessary to avoid delay of overall project.

PART 2 - PRODUCTS

NOT USED

PART 3 - EXECUTION

3.01 EXAMINATION

A. Verify that utilities have been disconnected and sealed.

B. Insofar as is practicable, arrange operations to reveal unknown or concealed conditions for examination and verification before removal or demolition.

C. Verify actual conditions to determine, in advance, whether removal or demolition of any element will result in structural deficiency, overloading, failure, or unplanned collapse.

1. Demolish and remove connections to all electrical gas, and plumbing fixtures required to remove asbestos containing materials/lead-based paint/PCBs.

3.02 PREPARATION

A. Traffic: Do not obstruct walks or public ways without the written permission of governing authorities and of the Owner. Where routes are permitted to be closed, provide alternate routes if required.

B. Protection:

C. Provide for the protection of persons passing around or through the area of demolition.

1. Perform demolition so as to prevent damage to adjacent improvements and facilities to remain.

2. Protect ground surfaces, walls, floors, and other new or existing work from damage during demolition operations.

D. Damages: Without cost to the Owner and without delay, repair any damage caused to facilities to remain.

3.03 POLLUTION CONTROLS

A. Control as much as practicable the spread of dust and dirt.

B. Observe environmental regulations.

C. Do not allow water usage resulting in freezing or flooding.

D. Do not allow adjacent improvements to remain to become soiled by demolition operations.

3.04 DEMOLITION - GENERAL

A. Remove: Items indicated to be removed shall be removed by the Contractor.

B. Existing to Remain: Construction or items indicated to remain shall be protected against damage during demolition operations. Where practical, and with the Owner's permission, the Contractor may elect to remove items to a suitable storage location during demolition and then properly clean and reinstall the items.

C. Perform work in a systematic manner.

D. Demolish and remove existing construction only to the extent required, as indicated in the Contract Documents.

E. Perform selective demolition using methods that are least likely to damage work to remain and which will provide proper surfaces for patching.

F. Remove debris daily.

G. Use any methods permitted by governing regulations and the requirements of the Contract Documents.

3.05 DISPOSAL OF DEMOLISHED MATERIALS

A. Promptly dispose of materials resulting from demolition operations. Non-contaminated material (materials not containing residue asbestos, lead, pcb or other hazardous, regulated or special waste) may be disposed of as construction waste. Do not allow materials to accumulate on site.

B. All rubbish and waste material from the Work shall be neatly stacked or kept in suitable containers and removed from the premises daily. The premises shall be kept clean and in an orderly condition at all times to the satisfaction of the Owner and the Consultant.

C. Transport materials resulting from demolition operations and legally dispose of off-site.

D. Off-site disposal location shall not be within one-half mile of any portion of the project site or within sight of the project site.

E. Remove decayed, vermin-infested, or otherwise dangerous or unsuitable materials and promptly dispose of off-site.

3.06 CLEANING

A. Throughout the construction period, the Contractor shall maintain the building and site free of rubbish, debris, surplus materials, and other items not required for the Work.

B. Remove such material from the site daily to prevent accumulations.

C. Remove all construction debris from work areas, and remove all hazardous waste and asbestos waste as required by the most current federal, state, and local regulations and the requirements of the specifications.

END OF SECTION

SECTION 02-8213

ASBESTOS ABATEMENT

PART 1 - GENERAL

1.01 RELATED DOCUMENTS

A. Drawings and General Provisions of Contract, including General Supplementary Conditions and Division 1 Specifications Sections, apply to this Section.

B. Sections containing requirements related to this Section include, but are not limited to:

1. Section 02-8200 – Selective Hazardous Building Materials Abatement Demolition

2. Section 02-8313 – Lead-Based Paint Awareness

3. Section 02-8416 – Universal Waste Removal and Recycling

4. Section 02-8432 – PCBs Assumed Greater than 50 PPM Sealant Abatement

5. HBM-01 – Hazardous Building Materials Abatement Drawing

1.02 CONSULTANT

A. The Owner shall retain Langan for the purposes of project management and monitoring during Asbestos Abatement/Roof/Window Removal. The Consultant will represent the Owner in all phases of the abatement/roofing/window project at the discretion of the Owner. The Asbestos Abatement/Roofing Contractor(s) will regard the Consultant's direction as authoritative and binding as provided herein, in matters particularly but not limited to approval of work areas, review of monitoring results, completion of the various segments of work, final completion of the abatement, submission of data, and daily field punch list items. The State of Connecticut licensed Asbestos Consultant — Project Designer is Matthew Myers (license no. 000058).

1.03 USE OF THE CONTRACT DOCUMENTS

A. It shall be incumbent upon the Contractor to visit the Site and determine what exists, its condition, and what will be required to accomplish the Work intended by the Contract Documents. No increase in the Contract Sum will be permitted as a result of the Contractor's failure to visit the Site and understand the existing conditions.

B. All work shall comply with the Contract Documents and with applicable Codes, laws, regulations, and ordinances wherever applicable. The most stringent of all the foregoing shall govern.

C. It is not intended that the Specifications show every detail of the Work, but the Contractor shall be required to furnish within the Contract Sum all material and labor necessary for the completion of the Work in accordance with the intent of the Specifications.

D. In case of ambiguity among the Contract documents, the more stringent requirement as determined by the Consultant shall prevail.

E. The Work of this Contract includes making modifications as necessary, subject to approval by Owner in consultation with the Consultant, to correct any conflicts.

F. All items, not specifically mentioned in the Specifications but implied by trade practices to complete the work, shall be included.

G. This specification and drawings cover the proper and legal removal and disposal of all asbestos-containing materials (ACM) and asbestos contaminated waste from the UCONN Avery Point Campus Academic Building Site at 1084 Shennecossett Road in Groton, Connecticut. The abatement activities shall comply with all aspects of the contract documents and Federal, State and local requirements.

H. Whenever there is a conflict or overlap within these specifications and between applicable codes and regulations, the most stringent provision specified shall apply.

1.04 EXAMINATION OF THE SITE

A. It is understood that the Contractor has examined the Site and made his own estimates of the facilities and difficulties attending the execution of the Work, and has based his price thereon.

B. Except for unforeseeable concealed conditions as determined by the Consultant, the Contractor shall make no claim for additional cost due to the existing conditions at the Site.

C. The abatement/roofing contractor(s) is/are responsible for verifying the quantities of all materials to be removed, and the conditions of these materials. This independent site verification shall include the quantities of roofing materials and other materials affected by work as well as all applicable site conditions.

D. The abatement/roofing contractor(s) is/are responsible for cleaning/decontaminating/abating the interiors of the building should their removal/abatement techniques result in asbestos containing roofing materials/waste entering the building. This work will include pre-cleaning areas, moveable and non-moveable objects, constructing containments, etc. The owners consultant will perform visual inspections and re-occupancy air testing. This contractors/roofers work will all be performed at no additional cost to the owner.

1.05 CONTRACTOR QUALIFICATIONS

A. All bidders shall submit a record of prior experience in asbestos abatement/roofing projects, listing no less than three (3) completed jobs in the past year and over 5 year's experience, with all projects of similar size and scope. The Contractor shall list the experience and training of the project foremen and all on-site personnel. The information that should be included is as follows:

1. Project Name and Address

2. Owner's Name and Address

3. Architect/Consultant

4. Contract Amount

5. Date of Completion

6. Extras and Changes

B. The Contractor selected must appear on the approved list of Asbestos Abatement contractors on file at the State of Connecticut Department of Public Health (CTDPH) and hold a valid license for asbestos abatement within the State of Connecticut if the materials to be removed become a regulated asbestos containing material (RACM) during removal and/or if asbestos containing roofing/other materials enter the building and require abatement and/or interior materials require abatement (ceiling materials, roof drain/pipe/pipe fitting insulation, etc.). The Contractor must submit documentation of asbestos roofing material abatement training if this is the only material(s) to be removed and the contractor only abates non-friable roofing materials as part of their work.

C. Submit a written statement regarding whether the Contractor has ever been found out-of-compliance with federal or state asbestos and/or lead regulations pertaining to worker protection, removal, transport, or disposal.

D. The Contractor shall be responsible for obtaining all necessary or required permits from the Federal, State and local agencies having jurisdiction over this asbestos abatement/roofing project. Failure on behalf of the Contractor to obtain these permits shall not result in any extension for the timely results of completion of the work set forth in the Contract. The Contractor shall be responsible and shall be required to pay any administrative penalties imposed on the owner for actions taken or lack thereof by the Contractor.

E. Work includes any and all selective demolition and protective measures required to access and remove ACM and maintain a safe working environment.

F. Upon completion of asbestos/roof/window removal, the contractor shall provide completed, signed and notarized statements indicating that all asbestos-containing materials identified in the scope of work and project description (Section 1.8 and 1.9) were properly removed and disposed of in accordance with applicable Federal, State, and local regulations.

G. All contractors submitting a bid for this work shall visit the work site, attend a pre-bid meeting and walk-through, to be scheduled by the Owner, and be familiar with the work in its entirety. The contractors pre-meeting attendance and bid submission affirms his/her acceptance of the work, site, and building conditions as is.

H. The contractor shall be responsible for paying the utility bills for the use of power and water (unless owner agrees to supply at no cost to contractor). However, if any such temporary facilities cannot be provided, it shall be the contractor's responsibility to provide all temporary connections and hook-ups as well as obtaining permits and paying all fees for making such services available for his work as is necessary. If necessary, the Contractor shall provide temporary services as specified herein, and as required or as necessary to carry out the work. This may include such items as portable generators, water tank trucks, pumps and necessary accessories or the means and equipment and services necessary to temporarily connect to and maintain such services from adjacent utility systems.

I. All Contractor personnel involved with asbestos/roof removal work must be thoroughly familiar with the standard operating procedures of the Contractor for removal work as well as all applicable Federal and State regulations governing asbestos removal work. The contractor must comply with all applicable OSHA regulations for roofing/elevated work.

J. The Supervisor and Asbestos Abatement workers shall be accredited in accordance with EPA regulation 40 CFR Part 763, subpart E, Appendix C; and CTDPH regulations as outlined in Section 19a-332a-1 through 19a-332a-16 (Standards for Asbestos Abatement), and Section 20-440-1 through 20-440-9 (Licensure and Training Requirements for Persons Engaged in Asbestos Abatement and Consulting Services) if applicable. Should the work be limited to only exterior non-friable roofing work, the owner may accept 8 hour training for roofing workers who only perform exterior roofing abatement activities.

K. The Contractor shall be aware of all conditions of the Project and is responsible for verifying quantities and locations of all Work to be performed. Failure to do so shall not relieve the Contractor of its obligation to furnish all labor and materials necessary to perform the work. Any discrepancies noted shall be brought to the attention of the Owner and Engineer prior to bidding the project. No claims for extras shall be made during construction/abatement/ demolition. The contractor is solely responsible for all construction/abatement means, methods, techniques, sequences and procedures and for coordinating all work under the contract.

L. Work includes necessary selective demolition and protective measures required to access and remove ACM/asbestos containing roofing materials and maintain a safe working environment.

M. It is the sole responsibility of the Contractor to determine what, if any patents are applicable to the Project. The Contractor will pay all royalties and/or license fees, and will defend all suits or claims for infringement of any patent rights and save the Owner, Architect, Asbestos Safety Control Monitor, Design Sub-Consultant, and Construction Manager harmless from loss, including attorney's fees, on account thereof.

N. The Contractor shall coordinate with the Consultant and maintain the project schedule. The schedule or phasing of work may be adjusted by the owner. Adjustments to the project phasing shall have no effect on the contract price as long as the scope of work is not altered by the owner.

O. The abatement contractor shall hold and document daily pre-abatement safety tool box meeting to review safe work practices and emergency communication program for the project. The abatement contractor's supervisor and the consultant's project monitor must also ensure that proper fire extinguishing equipment is present. The supervisor shall be knowledgeable in use of fire extinguishing equipment, and emergency exit plans.

1.06 TESTING LABORATORY SERVICES

A. The Contractor shall submit to the Consultant the name; address and qualifications of proposed laboratories intended to be utilized for sample analysis as required by this section and they must be CTDPH approved. At a minimum, PCM air sampling complying with all applicable OSHA regulations is required. Air sampling must be performed for one week’s time (5 days) at a minimum regardless of prior testing data.

1.07 ADDITIONAL GENERAL REQUIREMENTS

A. The Contractor shall employ a Supervisor with at least three (3) years’ experience on projects of similar scope and magnitude who shall be responsible for all work involving asbestos/roof abatement as described in the specifications and defined in applicable regulations, and have full time daily supervision of the same. The Supervisor shall be the competent person as defined by OSHA regulations.

B. The Contractor shall allow the work of this contract to be inspected if required by local, state, federal, and any other authorities having jurisdiction over such work. The Contractor shall immediately notify the Owner and Consultant and shall maintain written evidence of such inspection for review by the Owner and Consultant.

C. The Contractor shall incur the cost of all fines resulting from regulatory non-compliance as issued by federal, state, and local agencies. The Contractor shall incur the cost of all work requirements mandated by federal, state, and local agencies as a result of regulatory non-compliance, negligence or contamination of the building from exterior roof removal activities/abatement.

D. The Contractor shall immediately notify the Owner and Consultant of the delivery of all permits, licenses, certificates of inspection, of approval, or occupancy, etc., and any other such instruments required under codes by authorities having jurisdiction,

regardless of who issued, and shall cause them to be displayed to the Owner and Consultant for verification and recording. The contractor shall include CT DPH notification requirements for the work if exterior materials become friable during removal operations. It shall be incumbent upon the contractor performing the asbestos/roof/window removal to determine if the removal methods shall render the asbestos containing exterior roofing materials friable.

1.08 SCOPE OF WORK

A. This specification and drawing HBM - 01 cover the proper and legal removal and disposal of asbestos-containing materials (ACM) and asbestos contaminated waste from the UCONN Avery Point Campus Academic Building Site at 1084 Shennecossett Road in Groton, Connecticut.. The abatement activities shall comply with all aspects of the contract documents and Federal, State and local requirements. There is exterior non-friable asbestos containing roofing materials (miscellaneous materials) and assumed sealant compounds and paint identified on the site. Suspect asbestos containing roof drain insulation may also exist and could be impacted by the work.

1.09 PROJECT DESCRIPTION

A. The site is an occupied school. Work includes materials to be impacted by the partial roof replacement/renovation project that will encompass the roofing flashing (all layers) - perimeter, penetration, walls, mechanical equipment and main roofing areas with elevation/height changes throughout as well as assumed sealant compounds and wood wall paint.

B. The base bid includes the removal and disposal of all asbestos containing materials as identified herein, and on the architects drawings by workers meeting requirements of OSHA 1926.1101 for Class 1 (possibly) and 2 work. The base bid will include the cost for removal and disposal of asbestos containing roof flashing materials (perimeter, penetration, walls, mechanical equipment and main roofing areas with elevation/height changes) and possibly roof drain insulation as well as sealant compounds and wood wall paint. Work includes all layers of flashing materials (black and contaminated layers). Exterior non-friable roofing materials can be removed by a contractor with proper OSHA training and personal protective equipment using proper engineering controls/training or by an abatement contractor. Work includes filing and permitting all necessary applications, notifications, requirements and fees; insurance; necessary design services; providing skilled, licensed and certified labor; materials; and equipment necessary for proper preparation, handling, removal and legal disposal of all asbestos-containing materials and asbestos contaminated waste from the subject building in accordance with all requirements of applicable Federal, State and local regulations, these specifications and the contract drawings. The following materials and amounts are included in the base bid work.

Base Bid

Material	Location	Estimated Quantity of ACM to be abated
Perimeter/Penetration/Wall/ Mechanical Equipment/ Main Roofing Areas with Elevation/ Height Changes - Roof Flashing (All layers/materials disposed of as contaminated)	Flat Roofs Including Stair Tower Lower Roofs	All (Includes Cleaning Roof Deck at Flashing Locations and Wall Substrates – Coordinate with Owner)
Roof Deck Tar on Bottom Layer	Stairwell Penthouse Tower Roof	All (Includes Cleaning Roof Deck Substrate)
Roof Gutter Flashing on Gutters and Adjacent Surfaces	Pitched Lecture Hall Roof	All
Window/Wall System Caulking, Glazing, Sealant Compounds and Wood Wall Paint (mixed asbestos, lead-based paint and assumed > 50 ppm PCB waste)	Lecture Hall Roof Wall Adjacent Mechanical Systems Elevated on Metal Beams, Stairwell Penthouse Tower	All
Roof Caulking Compounds (mixed asbestos and assumed > 50 ppm PCB waste)	Pitched Lecture Hall Roof, Main Flat Roof Areas, Stair Tower and Stairwell Penthouse Roof	All

The abatement/roofing contractor(s) is/are responsible for cleaning/ decontaminating/ abating the interiors of the building should their removal/abatement techniques result in asbestos containing roofing/other materials/waste enter/disturbed in the building. This work will include pre-cleaning areas, moveable and non-moveable objects, constructing containments, etc. The owners consultant will perform visual inspections and re-occupancy air testing. This contractors/roofers work will all be performed at no additional cost to the owner.

ALL HVAC OPENINGS (EXHAUSTS AND FRESH AIR INTAKES) AND WINDOWS SHALL HAVE CRITICAL BARRIERS INSTALLED ON THEM DURING ALL ABATEMENT ACTIVITIES TO AVOID POSSIBLE CONTAMINATION OF INTERIOR AREAS OF THE HVAC SYSTEM AND BUILDING INTERIOR.

Roof drain insulation may contain asbestos (possible hidden above fixed ceilings) If work involves the disturbance of these types of materials, samples should be obtained for possible asbestos content or they should be assumed to contain asbestos. Abatement, if required, should be performed using a minimum (depending on the amount of material) of glove bag technique with a containment surrounding the work area. This work will be covered by unit pricing if needed.

The window waste (lecture hall area and stairwell – painted wood, caulking/glazing/sealant compounds) and roof caulking compounds must be disposed of as mixed asbestos and assumed PCB > 50 ppm hazardous waste. The contractor should assume painted wood waste will contain lead-based paint and pricing should include disposal as lead hazardous waste unless TCLP sampling proves otherwise and then a credit will be issued to the owner for disposal as non-lead-hazardous containing waste.

C. Additional materials as discovered outside of those listed will be covered by unit prices if all is not listed as the quantity. Quantities are estimates only and should be verified by the Contractor. Some of the work will be performed in multiple mobilizations at different periods of time in conjunction with other trades (i.e., other trades work, demolition work, etc.). MSD sheets for chemicals to be used during the project must be submitted to the Owner's Representative prior to site delivery. The contractor is responsible for providing temporary water, power, and heat as needed at the Site. Temporary lighting within the work areas must be connected to Ground Fault Circuit Interrupter (GFCI) Power Panels installed by a State of Connecticut licensed electrician and located outside of the work areas. The contractor shall be responsible for paying for the use of power and water. It shall also be the contractor's responsibility to provide all fixed and temporary connections and hook-ups as well as obtaining permits and paying all fees for making such services available for his work as is necessary. The Contractor shall provide services as specified herein, and as required or as necessary to carry out the work. This will include such items as temporary hard line installation, portable generators for short term work, water tank trucks, pumps and necessary accessories or the means and equipment and services necessary to temporarily connect to and maintain such services from adjacent utility systems. The contractor is responsible for contacting all utility services and getting power connections from the electrical lines located on or adjacent to the properties.

D. The general/abatement contractors shall only use heavy equipment operators that have proper asbestos and/or hazwoper training when disturbing/removing/moving and packing asbestos, lead and PCB containing materials. Acceptable training for asbestos can be 32 hour asbestos worker training or 8 hours for non-friable roofing work with annual refresher training. 40 hour hazwoper training and annual refresher training is required for operators handling lead and/or PCB containing/contaminated

materials. All operators must also have current medicals, fit test data and wear respirators during work.

E. The remediation/asbestos abatement contractor, their subcontractors, waste transporters and/or landfill(s) do not have permission to take/analyze building materials for PCB content/ concentrations without written permission from the building owner prior to such sampling. Should the contractor or other parties listed above take/analyze PCB samples without the owner's permission and PCB's are found to be >1 ppm, the hazardous materials/remediation contractor will be responsible for **all costs** associated with the abatement/ remediation/replacement of all the interior/exterior building materials and adjacent surfaces, including soil/asphalt/concrete/etc. as well as all costs associated with project delays, attorney fees for all parties affected and all costs resulting from CTDEEP/EPA requirements that may occur as a result.

F. The Owner shall retain a Consultant for the purposes of project management and monitoring during Asbestos Abatement. The Consultant will represent the Owner in all phases of the abatement project at the discretion of the Owner. The Asbestos Abatement Contractor will regard the Consultant's direction as authoritative and binding as provided herein, in matters particularly but not limited to approval of work areas, review of monitoring results, completion of the various segments of work, final completion of the abatement, submission of data, and daily field punch list items. The State of Connecticut licensed Asbestos Consultant — Project Designer is Matthew Myers (license no. 000058).

1.10 DEFINITIONS

A. The following definitions relative to asbestos abatement apply:

1. Abatement - Procedures to control fiber release from asbestos-containing materials; includes removal, encapsulation, and enclosure.

2. Air Monitoring - The process of measuring the fiber concentration of an area or of a person.

3. Amended Water - Water to which a surfactant has been added.

4. Asbestos - The name given to a number of naturally occurring fibrous silicates. This includes the serpentine forms and the amphiboles and includes chrysotile, amosite, crocidolite, tremolite, anthophyllite, and actinolite, or any of these forms, which have been chemically altered.

5. Asbestos Felt - a product made by saturating felted asbestos with asphalt or other suitable bindery, such as a synthetic elastomer.

6. Asbestos Fibers - Those particles with a length greater than five (5) microns and a length to diameter ratio of 3:1 or greater.

7. Asbestos Work Area - a regulated area as defined by OSHA 29 CFR 1926.1101 where asbestos abatement operations are performed which is

isolated by physical barriers to prevent the spread of asbestos dust, fibers, or debris. The regulated area shall comply with requirements of regulated area for demarcation, access, respirators, prohibited activities, competent persons and exposure assessments and monitoring.

8. Asphalt Shingles, Composition Shingles or Strip Slates: (Pitched Roof Shingle) - a roofing material manufactured by saturating a dry felt with asphalt then coating the saturated felt with a harder asphalt mixed with a fine mineral, glass fiber, asbestos or organic stabilizer. All or part of the weather side may be covered with mineral granules, or with powdered talc or mica.

9. Base Flashing (roof) - the flashing provided by upturned edges of a water tight membrane on a roof. May contain metal and associated waterproofing material or combination of roofing felts and waterproofing at the joint between a roofing surface and a vertical surface such as a wall or parapet. Also base flashing may be present at perimeter of completely flat roof.

10. Built-Up Roofing (Composition Roofing, Felt and Gravel Roofing, Gravel Roofing) - a continuous roof covering made up of laminations or plies of saturated or coated roofing felts, alternated with layers of asphalt or coal-tar pitch and surfaced with gravel, paint or finish coat.

11. Caulking - resilient mastic compound often having a silicone bituminous or rubber base; used to seal cracks, fill joints, and prevent leakage. Typical applications: around windows, and doors. Caulking is at joints between two dissimilar materials. (i.e. masonry to wood, masonry to steel)

12. Clean Room - An uncontaminated area or room, which is a part of the worker decontamination enclosure with provisions for storage of workers' street clothes and protective equipment.

13. Clearance Sampling - Final air sampling performed aggressively after the completion of the abatement project in a regulated area.

    Air samples collected by the air sampling professional having a fiber concentration of less than 0.01 fibers/cc of air in each of five (5) samples collected inside the containment will denote acceptable clearance sampling by Phase Contrast Microscopy.
    or
    Five air samples collected inside the containment by the air sampling professional having an average asbestos concentration of less than 70 structures per square millimeter of air will denote acceptable clearance sampling for Transmission Electron Microscopy.

14. Competent Person - As defined by 29 CFR 1926.1101, a representative of the Abatement Contractor who is capable of identifying existing asbestos hazards in the workplace and selecting the appropriate control strategy for asbestos exposure. Who has authority to take prompt corrective measures to

eliminate such hazards during asbestos removal. Competent person shall be properly trained in accordance with EPA's Model Accreditation Plan.

15. Curtained Doorway - A device to allow ingress and egress from one area to another while permitting minimal air movement between the areas. Two curtained doorways spaced a minimum of six feet apart can form an airlock.

16. Damp Proofing - application of a water impervious material to surface such as wall to prevent penetration of moisture, typically at foundation or below grade surface.

17. Decontamination Enclosure System - A series of connected areas, with curtained doorways between any two adjacent areas, for the decontamination of workers and equipment. A decontamination enclosure system always contains at least one airlock and is adjacent and connected to the regulated area, where possible.

18. Encapsulant - A liquid material which can be applied to asbestos-containing materials which controls the possible release of asbestos fibers from the materials either by creating a membrane over the surface (bridging encapsulant) or penetrating the material and binding its components together (penetrating encapsulant).

19. Equipment Room - Any contaminated area or a room that is part of the worker decontamination enclosure with provisions for storage of contaminated clothing and equipment.

20. Fixed Object - Unit of equipment or furniture in the work areas that cannot be removed from the work area.

21. Friable Asbestos Materials - Any material that contains more than 1% asbestos by weight, that can be crumbled, pulverized or reduced to powder by hand pressure.

22. Glazing Compound - any compound used to hold window glass in place, also referred to as putty, or glazier's putty, is not field applied, usually installed during manufacture of windows.

23. Hepa Filter - High Efficiency Particulate Air (HEPA) filter in compliance with ANSI Z9.2-1979.

24. Hepa Vacuum Equipment - Vacuum equipment equipped with an I IEPA filter system for filtering the effluent air from the unit.

25. Movable Object - Unit of equipment of furniture in the work area that can be removed from the work area.

26. Negative Air Pressure Equipment - A portable local exhaust system equipped with HEPA filtration used to create negative pressure in a regulated area (negative with respect to adjacent unregulated areas) and capable of

maintaining a constant, low velocity air flow into regulated areas from adjacent unregulated areas.

27. NESHAPS - National Emissions Standard for Hazardous Air Pollutants regulations enforced by the EPA.

28. Permissible Exposure Level (PEL) - The maximum airborne concentration of asbestos fibers to which an employee is allowed to be exposed. The new level established by OSHA 29 CFR 1926.1101 is 0.1 fibers per cubic centimeter of air as an eight (8) hour time weighted average and 1.0 fibers /cc averaged over a sampling period of 30 minutes as an Excursion Limit. The Contractor is responsible for maintaining work areas in a manner that this standard is not exceeded.

29. Project Monitor - A professional capable of conducting air monitoring and analysis of schemes. This individual should be an industrial hygienist, an environmental scientist, or an engineer with experience in asbestos air monitoring and worker protection equipment and procedures. This individual should have demonstrated proficiency in conducting air sample collection in accordance with 29 CFR 1910.1001 and 29 CFR 1926.1101.

30. Regulated Area - An area established by the employer to demarcate where Class I, II, and III asbestos work is conducted and any adjoining area where debris and waste from such asbestos work accumulate, and a work area within which airborne concentrations of asbestos exceed or there is a reasonable possibility that they may exceed the PEL.

31. Shower Room - A room between the clean room and the equipment room in the work decontamination enclosure with hot and cold running water and suitably arranged for employee showering during decontamination. The shower room is located in an airlock between the contaminated area and the clean area.

32. Waterproofing - material, usually a membrane or applied compound (tar/mastic), used to make a surface impervious to water, includes concealed conditions (applications around doors, windows, and in wall cavities). Sometimes combined with felts.

1.11 SUBMITTALS

A. Pre-Work Submittals: Within 7 days prior to the pre-construction conference, the Contractor shall submit 3 copies of the documents listed below to the Owner and Engineer for review:

1. Valid Contractor's Asbestos Removal license issued by the Connecticut Department of Public Health (CTDPH) for friable and interior abatement. Applicable roofing training documentation for exterior non-friable roofing workers/supervisor.

2. Certificate of insurance covering work of this Contract.

3. Name, experience of supervisors, and copies of valid Asbestos Supervisor permits issued by the CTDPH if applicable.

4. Citations/Violations/Legal Proceedings: Submit a statement describing:

   a. Any citations, violations, criminal charges, or legal proceedings undertaken or issued within the past two years by any law enforcement, regulatory agency, or consultant concerning performance on previous abatement contracts. Briefly describe the circumstances citing the Project and involved persons and agencies as well as the outcome of any actions.

   b. Any litigation or arbitration proceedings arising out of performance on past Projects.

5. Work Schedule:

   a. Show the complete sequence of abatement activities and the sequencing of Work within each building section.

   b. Show the dates for the beginning and completion of each major element of Work including substantial completion dates for each Work Area, building, or phase.

   c. Show projected percentage of completion for each item, as of the first day of each month.

   d. Show final inspection dates.

6. Project Notifications: As required by Federal, State, and local regulatory agencies together with proof of transmittal (i.e. certified mail return receipt). The contractor shall notify the Connecticut Department of Public Health at least ten (10) days prior to the start of asbestos abatement, as required by the Regulations of Connecticut State Agencies, Section 19a-332a-3 if work will include any friable and/or interior asbestos abatement.

7. Abatement Work Plan: The Contractor shall design, prepare and submit to the Authority for review and approval, a detailed asbestos removal plan for the project in accordance with the applicable regulations and these specifications. The plan shall, at minimum, show limits of containment and work areas, methods of removal, location of decontamination units, number and location of negative air units, waste routes, waste storage location, entrance and exits, emergency exits, and any necessary details. Work shall not commence until the Authority has reviewed, commented and approved the Contractor's asbestos removal plan. Provide plans which clearly indicate the following:

   a. All Work Areas/containments numbered sequentially.

   b. Locations and types of all decontamination enclosures.

c. Entrances and exits to the Work Areas/containment.

d. Type of abatement activity/technique for each Work Area/containment.

e. Number and location of negative air units and exhaust if applicable. Also provide calculations for determining number of negative air pressure units.

f. Proposed location and construction of storage facilities and field office.

g. Location of water and electrical connections to building services.

h. Waste transport routes through the building to the waste storage container.

i. Contingency plan.

8. Name, location, and applicable licenses for primary and secondary landfill for disposal of asbestos-containing material and asbestos contaminated waste.

9. Summary of proposed materials, and equipment to be used.

10. Certification that vacuums, temporary ventilation equipment, and other equipment to be used meet the ANSI 29.2-79 requirement for airborne fiber filtration.

11. If rental equipment is to be used in work area or to transport asbestos contaminated waste, provide notice to rental agency stating intended use of equipment, with copy to the Authority.

12. Summary of the Contractor's workforce by disciplines. Include a notarized statement signed by the Contractor documenting that all proposed workers, by name, have received all required medical examinations and have been properly trained and certified in asbestos removal work, respirator use, to appropriate EPA and OSHA standards for asbestos removal. Include on statement Contractor's compliance with OSHA medical surveillance requirements.

13. The Contractor shall submit his/her Health and Safety Plan and Standard Operating Procedures for this project for use in complying with the requirements of these Specifications and applicable regulations. The Plan shall include, but shall not be limited to: distribution and use of amended water, the sequencing of asbestos work, detailed schedules and dates, shift times, and work activities during that shift, the interface of other trades involved in the performance of work, methods to be used to assure the safety of building occupants and visitors to the Site, security of the work areas, and a detailed description of the methods to be employed to control airborne fiber concentrations.

14. Written description of emergency procedures to be followed in case of injury or fire. This section must also include evacuation procedures, sources of medical assistance and procedures for access by medical personnel.

15. Level of respiratory protection intended for each operation for the project.

B. Project Closeout Submittals: Submit the following to Owner and Consultant at the close out of the Project (no later than 15 days subsequent to site demobilization):

1. Originals of all waste disposal manifests, seals, and disposal logs.

2. OSHA compliance air monitoring records conducted during the Work.

3. Daily progress log.

a. A list of all Workers used in the performance of the Project, including name, social security number, and CTDPH certification number if applicable.

b. For each Worker used in the performance of the Project, submit required employee statements including Medical Examination Statement, Worker's Acknowledgment Statement, Respirator Fit Test, and Employee Training Statement.

c. Certification for the laboratory that analyzed the OSHA personnel air samples.

d. A notarized “Release of Liens” in a form acceptable to the owner. Such notarized release of liens shall certify that all sub-Contractors, labor suppliers, etc. have been paid their pro rate share of all payments to date for the project, that the Contractor has no basis for further claims, and will not make further claims for payment in any account after the first payment is made to him.

1.12 MEDICAL REQUIREMENTS

A. Prior to potential exposure to airborne asbestos fibers, provide workers with a comprehensive medical examination as required by 29 CFR 1910.1001, and 29 CFR 1926.1101.

1. This examination is not required if adequate records show the employee has been examined as required by 29 CFR 1910.1001, and 29 CFR 1926.1101 within the past year.

2. The same medical examination shall be given on an annual basis to employees engaged in an occupation involving asbestos fibers and within thirty (30) calendar days before or after the termination of employment in such occupations.

B. As required by 29 CFR 1910.1001, and 29 CFR 1926.1101 maintain complete and accurate records of employees' medical examinations for a period of thirty (30) years after termination of employment and make records of the required medical examinations available for inspection and copying to: The Assistant Secretary of Labor for Occupational Safety and Health, the Director of the National Institute for Occupational Safety and Health (NIOSH), authorized representatives of either of them, and an employee's physician upon the request of the employee or former employee.

C. The Contractor shall furnish the Owner evidence of its firm's medical surveillance program required under 29 CFR 1910.1001, and 29 CFR 1926.1101.

1.13 REGULATIONS AND STANDARDS

Regulatory compliance includes but is not necessarily limited to applicable requirements set forth by:

A. Federal Regulations:

1. 29 CFR 1910 and 1926 – Construction and General Industry Standards
2. 29 CFR 1910.1001, "Asbestos" (OSHA)
3. 29 CFR 1910.1200, "Hazard Communication" (OSHA)
4. 29 CFR 1910.134, "Respiratory Protection" (OSHA)
5. 29 CFR 1910.145, "Specification for Accident Prevention Signs and Tags" (OSHA)
6. 29 CFR 1910.146, "Permit Required Confined Spaces" (OSHA)
7. 29 CFR 1926, "Construction Industry" (OSHA)
8. 29 CFR 1926.1101, "Asbestos, Tremolite, Anthophyllite, and Actinolite" (OSHA)
9. 29 CFR 1926.500 "Guardrails, Handrails and Covers" (OSHA)
10. 29 CFR 1926.501 "Fall Protection" (OSHA)
11. 40 CFR 61, Subpart A, "General Provisions" (EPA)
12. 40 CFR 61, Subpart M, "National Emission Standards for Hazardous Air Pollutants (NESHAP)" (EPA)
13. 40 CFR 763 Subpart E, "Asbestos in Schools Regulations" (EPA)
14. 49 CFR 171-172, Transportation Standards (DOT)

B. Connecticut Regulations:

State requirements which govern asbestos abatement work and hauling and disposal of asbestos waste materials include but are not necessarily limited to the following:

1. Connecticut Department of Environmental Protection (Solid Waste Management Regulations).

2. Connecticut Department of Public Health (CT-DPH) regulations outlined in Section 19a-332a-1 through 19a-332a-16 “Standards for Asbestos Abatement”

3. CT-DPH regulations outlined in Section 20-440-1 through 20-440-9 and 20-441 “Licensure and Training Requirements for Persons Engaged in Asbestos Abatement and Consulting Services”

4. Connecticut Department of Labor (CT-DOL)

5. Connecticut Department of Transportation (DOT)

C. Local Regulations:

Local agencies which may govern or have certain requirements regarding asbestos abatement work or hauling and disposal of asbestos waste materials include but are not necessarily limited to the following:

1. Building Department

2. Health Department

3. Fire Department

D. Standards and Guidance Documents:

1. American National Standard Institute (ANSI) Z88.2-80, Practices for Respiratory Protection

2. ANSI Z9.2-79, Fundamentals Governing the Design and Operation of Local Exhaust Systems

3. EPA 560/585-024, Guidance for Controlling Asbestos Containing Materials in Buildings (Purple Book)

4. EPA 530-SW-85-007, Asbestos Waste Management Guidance

1.14 EXEMPTIONS

A. Any deviations from these specifications require the written approval and authorization from the Owner and Consultant.

B. Any modifications from the standard work practices identified in the CTDPH Standards for Asbestos Abatement, Sections 19a-332a-1 to 19a-332a-16, must be requested in writing, and approved in writing from the CTDPH.

1.15 FINAL AIR CLEARANCE

A. Following the completion of the encapsulation phase of the work, the Consultant shall collect final air clearance samples inside the work area per AHERA regulation 40 CFR Part 763, and in compliance with CTDPH regulations. The Owner of the facility shall be responsible for payment of the sampling and analysis of the initial final air clearance samples only. The Contractor shall be responsible for payment of all costs associated with the collection and analysis of additional final air clearance samples if the first set of samples fail to satisfy the clearance criteria. Exterior non-friable roofing abatement does not require clearance re-occupancy air sampling however the consultant may perform air sampling during removal activities.

1.16 NOTIFICATIONS, POSTINGS, SUBMITTALS, AND PERMITS

A. The Contractor shall make the following notifications, and provide the submittals to the following agencies prior to the commencement of removal work. This notification is required ten (10) calendar days prior to the start of the abatement project if the work is going to render the exterior non-friable roofing/other materials, friable and/or interior abatement is to occur:

1. Connecticut Department of Public Health
410 Capital Avenue MS #12 AIR
P.O. Box 340308
Hartford, CT 06134

2. US EPA Region 1
5 Post Office Square, Suite 100 (OES05-4)
Boston, MA 02109-3912

B. The minimum information included in the notification to these agencies includes:

1. Name and address of building Owner/Operator

2. Building location

3. Building size, age, and use

4. Amount of friable asbestos

5. Work schedule, including proposed start and completion date

6. Asbestos removal procedures to be used

7. Name and location of disposal site for generated asbestos waste, residue, and debris

8. If landfill opens in Connecticut to accept ACM waste, Consultant will notify CTDEEP prior to utilizing said landfill.

1.17 WORK SITE SAFETY PLAN

A. The Contractor shall establish a set of emergency procedures and shall post them in a conspicuous place at the work site. The safety plan should include provisions for the following:

1. Evacuation of injured workers.

2. Emergency and fire exit routes from all work areas including roofing.

3. Emergency first aid treatment

4. Local telephone numbers for emergency services including ambulance, fire, and police.

5. A method to notify occupants of the building in the event of a fire or other emergency requiring evacuation of the building.

B. The Contractor is responsible for training all workers in these procedures.

1.18 INDEPENDENT AIR SAMPLING AND ASBESTOS ABATEMENT MONITORING

A. This section describes independent air sampling work being performed on behalf of the Owner. This work is not in the Contract Sum. This section describes air monitoring carried out by the Owner's Consultant to verify that the building beyond the work area and the outside environment remains uncontaminated. (Personal air monitoring required by OSHA is work to be performed by the Contractor and is within the Contract Sum.)

B. The purpose of the Owner's Consultant's air monitoring is to detect faults in the work are isolation such as:

1. Contamination of the building outside of the work area by airborne asbestos fibers

2. Failure of filtration or rupture in the differential pressure system (interior/friable materials)

3. Contamination of air outside the building envelope by airborne asbestos fibers.

4. Should any of the above occur the Contractor shall immediately cease asbestos abatement activities until the fault is corrected. Do not recommence work until authorized by the Owner's Consultant.

C. The Owner's Consultant will monitor airborne fiber counts in the Work Area. The purpose of this air monitoring will be to detect airborne asbestos concentrations,

which may challenge the ability of the Work Area isolation procedures to protect the balance of the building or outside of the building from contamination by airborne fibers.

D. To determine if the elevated airborne fiber counts encountered during abatement operations have been reduced to an acceptable level, the Consultant will sample and analyze air in accordance with clearance air sampling requirements.

E. The Owner's Consultant will perform on-site monitoring throughout the course of the project, as follows:

1. All work procedures shall be continuously monitored by the Consultant to assure that areas outside the designated work locations in/on the buildings will not be contaminated.

2. Prior to work on any given day, the Contractor's designated "competent person" shall discuss the day's work schedule with the Consultant to evaluate job tasks with respect to safety procedures and requirements specified to prevent contamination of the building or the employees. This includes a visual survey of the work area and the decontamination of the building or the employees. This includes a visual survey of the work area and the decontamination enclosure systems.

1.19 CONTRACTOR’S AIR SAMPLING RESPONSIBILITY

A. The Contractor shall independently retain an air sampling professional to monitor airborne asbestos concentrations in the workers' breathing zone and to establish conditions and work procedures for maintaining compliance with OSHA Regulations 29 CFR 1910.1001 and 1926.1101.

B. The Contractor's air sampling professional shall document all air sampling results and provide a report to the Consultant within 48 hours after sample collection. Exterior non-friable roofing removal activities must have a minimum of 5 days air sampling data or for the length of the project.

C. All air sampling shall be conducted in accordance with methods described in OSHA Standards 29 CFR 1910.1001 and 1926.1101 and the OSHA Respiratory Protection Standard 29 CFR 1910.134.

D. A minimum of 20% of all workers in each working category (i.e., gross removal, final clearance, etc.) must be monitored each day of asbestos removal activities.

E. Phase Contrast Microscopy may be used to analyze personal air samples. The Contractor shall arrange and pay for all costs of the testing. Laboratories used shall be currently enrolled in the American Industrial Hygiene Association Proficiency Analytical Testing Program or an equivalent recognized program and approved by CTDPH.

1.20 PROPER WORKER PROTECTION

A. This section describes the equipment and procedures required for protecting workers against asbestos contamination and other workplace hazards except for respiratory protection.

B. All workers are to be accredited as Abatement Workers as required by the AHERA regulation 40 CFR 763 Appendix C to Subpart E if the materials to be removed become regulated. Appropriate OSHA training is required of all workers and roofing personnel performing asbestos removal.

C. The Contractor is required to be certified and accredited as required by the State of Connecticut Department of Public Health Services if materials being removed become friable (RACM).

D. In accordance with 29 CFR 1926 and 2-440-7 of RCSA, all workers shall receive a training course covering the dangers inherent in handling asbestos, the dangers of breathing asbestos dust, proper work procedures, and proper worker protective measures. This course must include but is not limited to the following:

1. Methods of recognizing asbestos

2. Health effects associated with asbestos

3. Relationship between smoking and asbestos in producing lung cancer

4. Nature of operations that could result in exposure to asbestos

5. Importance of and instruction in the use of necessary protective controls, practices and procedures to minimize exposure including:

    a. Engineering controls

    b. Work Practices

    c. Respirators

    d. Housekeeping procedures

    e. Hygiene facilities

    f. Protective clothing

    g. Decontamination procedures

    h. Emergency procedures

    i. Waste disposal procedures

6. Purpose, proper use, fitting, instructions, and limitations of respirators as required by 29 CFR 1910.134

7. Appropriate work practices for the work

8. Requirements of medical surveillance program

9. Review of 29 CFR 1926

10. Pressure Differential Systems

11. Work practices including hands on or on-job training

12. Personal Decontamination procedures

13. Air monitoring, personal and area

E. The Contractor shall provide medical examinations for all workers who may encounter an airborne fiber level of 0.1 f/cc or greater for an 8 hour Time Weighted Average. Examination shall, at a minimum, meet OSHA requirements as set forth in 29 CFR 1926 In addition, provide an evaluation of the individual's ability to work in environments capable of producing heat stress in the worker.

F. Submit the following to the Consultant for review. The Contractor shall not start work until these submittals are returned with Consultant action stamp indicating that they are approved.

1. Submit copies of certificates from an EPA-approved AHERA Abatement Workers course for each worker as evidence that each asbestos Abatement Worker is accredited as required by the AHERA Regulation 40 CFR 763 Appendix C to Subpart E, February 3, 1994 or evidence of OSHA compliant roofing abatement training if work only pertains to exterior non-friable roofing materials.

2. Submit evidence that the Contractor is certified to perform asbestos abatement work by the State of Connecticut Department of Public Health services if exterior friable or interior abatement is to occur.

3. Submit an original signed copy of the Certificate of Worker's Acknowledgment found at the end of this section, for each worker who is to be at the job site or enter the Work Area.

4. Submit documents verifying that each worker has had a medical examination within the last 12 months as part of compliance with OSHA medical surveillance requirements. Submit, at a minimum, for each worker the following:

   a. Name and Social Security Number

   b. Physicians Written Opinion from examining physician including at a minimum the following:

5. Whether worker has any detected medical conditions that would place the worker at an increased risk of material health impairment from exposure to asbestos.

6. Any recommended limitations on the worker or on the use of personal protective equipment such as respirators.

7. Statement that the worker has been informed by the physician of the results of the medical examination and of any medical conditions that may result from asbestos exposure.

8. Copy of information that was provided to physician in compliance with 29 CFR 1926

9. Statement that worker is able to wear and use the type of respiratory protection proposed for the project, and is able to work safely in an environment capable of producing heat stress in the worker.

G. Submit certification signed by an officer of the abatement-contracting firm and notarized that exposure measurements, medical surveillance, and worker training records are being kept in conformance with 29 CFR 1926.

H. The Contractor shall maintain control of and be responsible for access to all work areas to ensure the following requirements:

1. Non-essential personnel are prohibited from entering the area

2. All authorized personnel entering the work area shall read the "Worker Protection Procedures" which are posted at the entry points to the enclosure system, and shall be equipped with properly fitted respirators and protective clothing

3. All personnel who are exiting from the decontamination enclosure system/work area shall be properly decontaminated

4. Asbestos waste that is taken out of the work area must be properly bagged and labeled in accordance with these specifications. The surface of the bags shall be decontaminated. Asbestos leaving the enclosure system must be immediately transported off-site or immediately placed in locked, posted temporary storage on-site, and removed within 24 hours of the project conclusion.

5. Any material, equipment, or supplies that are brought out of the decontamination enclosure system/work area shall be cleaned and decontaminated by wet cleaning and/or HEPA vacuuming of all surfaces.

1.21 POST-PROJECT CLOSEOUT

A. The Contractor shall provide all required documentation as required by this specification once his/her work is complete, final clearances passed (if applicable)

and asbestos waste disposed of. This should include but not be limited to: bound copy of the daily log containing log of daily work activities, all supervisor and worker certificates of training and Connecticut licenses, certificates of insurance, daily sign in sheets, containment entry/exit logs, copy of recording manometer charts, waste shipment records, personal air monitoring laboratory reports and chain-of-custody documentation, and project completion certificate. Final payment shall not be made to the Contractor until all required documentation is submitted and verified.

PART 2 - PRODUCTS

NOT USED.

2.01 MATERIALS

A. Deliver all materials in the original packages, containers, or bundles bearing the name of the manufacturer and the brand name and product technical description.

B. Damaged or deteriorating materials shall not be used and shall be removed from the premises. Material that becomes contaminated with asbestos shall be decontaminated or disposed of as asbestos waste.

C. Polyethylene sheet in a roll size to minimize the frequency of joints shall be delivered to the job site with factory label indicating 4 or 6 mil.

D. Polyethylene disposable bags shall be six (6) mil with pertinent pre-printed label. Tie wraps for bags shall be plastic, five (5) inches long (minimum), pointed and looped to secure filled plastic bags.

E. Tape or adhesive spray will be capable of sealing joints in adjacent polyethylene sheets and for attachment of polyethylene sheet to finished or unfinished surfaces of dissimilar materials and capable of adhering under both dry and wet conditions, including use of amended water.

F. Surfactant (wetting agent), shall consist of fifty (50) percent polyoxyethylene ether and fifty (50) percent polyoxyethylene ester, or equivalent, and shall be mixed with water to provide a concentration of one (1) ounce surfactant to five (5) gallons of water or as directed by manufacturer.

G. Removal encapsulant shall be non-flammable factory prepared penetrating chemical encapsulant found acceptable to Consultant. Usage shall be in accordance with manufacturer's printed technical data.

H. The Contractor shall have available spray equipment capable of mixing wetting agent with water and capable of generating sufficient pressure and volume and having sufficient hose length to reach all areas with asbestos.

I. Impermeable containers are to be used to received and retain any asbestos-containing or contaminated materials until disposal at an acceptable disposal site.

The containers shall be labeled in accordance with OSHA Standard 29 CFR 1926.1101. Containers must be both air and watertight.

J. Labels and signs, as required by OSHA Standard 29 CFR 1926.1101, will be used.

K. Encapsulant shall be bridging or penetrating type which has been found acceptable to the Consultant. Usage shall be in accordance with manufacturer's printed technical data.

L. HEPA filtered local exhaust ventilation shall be utilized during the installation of enclosures and supports where asbestos-containing materials may be disturbed.

2.02 TOOLS AND EQUIPMENT

A. The Contractor shall provide all tools and equipment necessary for asbestos removal, encapsulation and enclosure.

B. The Contractor's air monitoring professional shall have air-monitoring equipment of type and quantity to monitor operations and conduct personnel exposure surveillance per OSHA requirements.

C. The Contractor shall have available sufficient inventory or dated purchase orders for materials necessary for the job including protective clothing, respirators, filter cartridges, polyethylene sheeting of proper size and thickness, tape and air filters.

D. The Contractor shall provide (as needed) temporary electrical power panels, electrical power cables, and electrical power sources (such as generators). Any electrical connection work affecting the building electrical power system shall be performed by a State of Connecticut licensed electrician.

E. The Contractor shall have available shower stalls and plumbing to support same to include sufficient hose length and drain system or an acceptable alternate.

F. Exhaust air filtration system units shall contain HEPA filter(s) capable of sufficient air exhaust to create negative pressure of -0.02 inches of water within enclosure with respect to outside area. Equipment shall be checked for proper operation by smoke tubes or differential pressure gauge before the start of each shift and at least twice during the shift. Adequate exhaust air shall be provided for a minimum of four (4) air changes per hour within the enclosure. No air movement system or air filtering equipment shall discharge unfiltered air outside. This is required for interior abatement areas/containment.

G. Vacuum units, of suitable size and capacities for the project, shall have HEPA filter(s) capable of trapping and retaining at least 99.97 percent of all monodispersed particles of 0.3 micrometers in diameter or larger.

H. The Contractor will have reserve units so that the station system will operate continuously.

2.03 RESPIRATORY PROTECTION

A. Select respirators from those approved by the Mine Safety and Health Administration (MSHA), and the National Institute for Occupational Safety and Health (NIOSH), Department of Health and Human Services.

B. Respirators shall be individually fit-tested to personnel under the direction of an Industrial Hygienist on a yearly basis. Fit-tested respirators shall be permanently marked to identify the individual fitted, and use shall be limited to that individual. Fit-test records shall be maintained on-site for each employee.

C. Where fiber levels permit, and in compliance with regulatory requirements, Powered Air Purifying Respirators (PAPR) are the minimum allowable respiratory protection permitted to be utilized during gross removal operations. The Contractor shall use supplied air respirator for confined space requirements. PAPR's are the minimal respiratory protection required for all thermal system insulation and surfacing asbestos abatement.

D. No respirators shall be issued to personnel without such personnel participating in a respirator training program.

E. High Efficiency Particulate Air (HEPA) respirator filters shall be approved by NIOSH and shall conform to the OSHA requirements in 29 CFR 1910.134 and 29 CFR 1926.1101.

F. A storage area for respirators shall be provided by the Contractor in the clean room side of the personnel decontamination enclosure where they will be kept in a clean environment.

G. The Contractor shall provide and make available a sufficient quantity of respirator filters so that filter changes can be made as necessary during the Work day. Filters will be removed and discarded during the decontamination process. Filters cannot be reused. Filters must be changed if breathing becomes difficult.

H. Filters used with negative pressure air purifying respirators shall not be used any longer than one eight (8) hour work day.

I. Any authorized visitor, worker, or supervisor found in the Work Area not wearing the required respiratory protection shall be removed from the project site and not be permitted to return.

J. The Contractor shall have at least two (2) Powered Air Purifying Respirators stored on-site designated for authorized visitors use. Appropriate respirator filters for authorized visitors shall be made available by the Contractor.

K. Establish a respirator program as required by ANSI Z88.2 and 29 CFR 1910.134, and 29 CFR 1926.1101. Provide respirator training and fit-testing.

2.04 PROTECTIVE CLOTHING

A. Provide personnel utilized during the Project with disposable protective whole body clothing, head coverings, gloves and foot coverings. Provide disposable plastic or

rubber gloves to protect hands. Cloth gloves may be worn inside the plastic or rubber for comfort, but shall not be used alone. Make sleeves secure at the wrists and make foot coverings secure at the ankles by the use of tape, or provide disposable coverings with elastic wrists or tops.

B. Provide sufficient quantities of protective clothing to assure a minimum of four (4) complete disposable outfits per day for each individual performing abatement Work.

C. Eye protection and hard hats shall be provided and made available for all personnel entering any Work Area.

D. Authorized visitors shall be provided with suitable protective clothing, headgear, eye protection, and footwear whenever they enter the Work Area.

PART 3 - EXECUTION

3.01 PRE-ABATEMENT MEETING

A. At least one week prior to the start of work a Pre-Construction Meeting will be scheduled and must be attended by the Contractor and any Sub-Contractors. The assigned Contractor Site Supervisor is also required to attend this meeting.

B. The Contractor shall present a detailed project schedule and project submittals at the Pre-Construction Meeting. Variations, amendments, and corrections to the presented schedule will be discussed, and the Owner and Consultant will inform the Contractor of any scheduling adjustments for this project.

C. Following the Pre-Construction Meeting, the Contractor shall submit a revised schedule (if needed) no later than one week after the meeting.

3.02 WORK AREA PREPARATION

A. Where necessary, shut down electrical power, including receptacles, equipment and light fixtures. Under no circumstances during the decontamination procedures will lighting fixtures be permitted to be operating when the spraying of amended water may contact the fixture (interior abatement). Provide GFCI devices, temporary power, and temporary lighting installed in compliance with the applicable electrical codes. All installations are to be made by a State of Connecticut licensed electrician.

B. Shut down and/or isolate heating, cooling, and ventilation air systems or zones to prevent contamination and fiber dispersal to areas of the structure. During the work, vents within the work area (including exterior) shall be "criticalled" with duct tape and polyethylene sheeting.

C. The Contractor shall be responsible for removing furniture from the work areas. The Contractor shall pre-clean moveable objects within the proposed work areas using HEPA vacuum equipment and/or wet cleaning methods as appropriate and

remove such objects from work areas to a temporary location. For example, ceiling tiles to gain access to materials.

D. Seal off all openings, including, but not limited to, windows, corridors, doorways, skylights, ducts, grills, diffusers, and any other penetration of the work areas, with polyethylene sheeting a minimum of six (6) mils thick, sealed with duct tape. This includes doorways, vents, windows and corridors that will not be used for passage during work areas and occupied areas. These are required for all openings/materials on roofs as well during abatement (ducts, ventilation systems, doors, windows, skylights, etc.).

E. Pre-clean fixed objects within the work areas, using HEPA vacuum equipment and/or wet cleaning methods as appropriate, and enclose with a minimum six (6) mil plastic sheeting sealed with duct tape.

F. Clean the proposed work areas using HEPA vacuum equipment or wet cleaning methods as appropriate. Do not use methods that raise dust, such as dry sweeping or vacuuming with equipment not equipped with HEPA filters.

G. After HEPA vacuum cleaning, cover fixed walls with two (2) layers of four (4) mil polyethylene sheeting to the floor level. Where fixed walls are not used, two layers of six (6) mil polyethylene sheeting will be applied to a rigid framework of wood, metal, or PVC. Where floor tile/mastic is not being abated, cover the floor with two (2) layers of six-mil polyethylene sheeting. All overlaps shall be sealed with tape or spray adhesive.

H. Maintain emergency and fire exits from the work areas, or establish alternate exits satisfactory to fire officials.

I. Clean and remove ceiling mounted objects, such as lights and other items not sealed off, which interfere with asbestos abatement. Use hand-held amended water spraying or HEPA vacuuming equipment during fixture removal to reduce settled fiber dispersal.

J. Create pressure differential between work areas and uncontaminated areas by the use of acceptable negative air pressure equipment sufficient to provide four (4) air changes per hour and create negative pressure of -0.02 inches of water within enclosure with respect to outside area as measured on a water gauge for interior containments.

3.03 DECONTAMINATION SYSTEM

A. The following requirements shall be followed for the worker decontamination unit:

1. At all asbestos abatement projects, work areas shall be equipped with decontamination facilities consisting of: a clean room, a shower room, and an equipment room attached to each containment. Decontamination facilities are required for all abatement work, friable or non-friable, interior or exterior.

2. The decontamination enclosure system chambers shall be constructed to meet the criteria of the Specification. The decontamination enclosure shall be installed watertight to prevent water leaks. The interior shall be lined with two layers of 6-mil fire-retardant plastic sheeting, with a minimum overlap of 16 inches at seams and sealed (airtight) by tape and adhesive. The interior floor shall be sheathed with (2) layers of reinforced fire retardant plastic sheeting with a minimum overlap on the wall of sixteen (16) inches. The contractor shall ensure compliance with local building codes and other regulations governing temporary structures.

3. Curtained Doorways: Three overlapping sheets of 6-mil polyethylene shall be placed over a framed doorway and secured along the top of the doorway. Secure the vertical edge of the outer sheets along one vertical side of the doorway and the vertical edge of the center sheet along the opposite vertical side of the doorway. The sheets shall be weighted so that they close quickly after being released.

4. Air Locks: Air locks shall consist of two curtained doorways placed a minimum of three feet apart.

    a. Clean Room: In this room, persons remove and leave all street clothes and put on clean disposable coveralls. Approved respiratory protection equipment is stored in this area. The floor of the clean room must be kept dry at all times. At the end of each shift, the room must be cleaned using wet rags. Also, a lockable door may be installed. No asbestos-containing materials are allowed in this room. The clean room shall be equipped with suitable hooks, lockers, shelves, etc. for workers to store personal articles and clothing. THIS IS NOT A CONTAMINATED AREA.

    b. Shower Room: Provide a completely watertight operational shower to be used by cleanly dressed workers heading for the Work area from the clean room or for showering workers headed out of the Work Area after dressing in the Equipment Room. Shower must be constructed so that water leakage is minimized. The shower shall have one shower per six full shift abatement people, calculated on the basis of the largest shift. Any leaking water must be cleaned immediately. Showers must be equipped with hot and cold running water, soap and sufficient disposable towels for the number of workers at the job site. Arrange water shut off and drain pump operation controls, so that a single individual can shower without assistance from either inside or outside the Work Area. THIS IS A CONTAMINATED AREA.

        Pump wastewater into a polyethylene lined 55-gallon drum located in the Work Area to be added to the asbestos waste. If the water is allowed by the work treatment workers to be pumped into a drain, provide 20 micron and 5 micron waste water filters in line to drain. Change filters at a minimum of once a day. Locate filters inside the

shower unit, so that the shower pan catches the water lost during filter change.

c. Equipment Room: Work equipment, footwear, and all other contaminated work clothing are to be left here upon exiting Work Area. A walk-off pan filled with water shall be located in the work area just outside the equipment room for workers to clean foot coverings while exiting the work area. This is a change and transit area for workers. Provide a drop cloth layer of sheet plastic on the floor of the Equipment Room for every shift change. Roll drop cloth layer in upon itself at the end of each shift and dispose of as contaminated waste. THIS IS A CONTAMINATED AREA.

Each room shall be separated from the other and from the work area by airlocks such as will prevent the free passage of air or asbestos fibers and shall be accessible through doorways protected with three (3) overlapping 6 mil polyethylene sheets which shall be weighed, so as to fall into place when people pass through the area. The shower room shall be contiguous to the clean room and equipment room. All personnel entering or leaving the work area shall pass through the shower room. The number of showers provided shall satisfy the requirements of OSHA 29 CFR 1910.141. Hot and cold water shall be supplied to the showers. The equipment room (dirty room) shall be situated between the shower room and the work area and separated from both by means of suitable barriers or overlapping flaps such as will prevent the free passage of air or asbestos fibers.
Decontamination chamber doors shall be of sufficient height and width to enable replacement of equipment, which may fall, and to safely stretcher or carry an injured worker from the Site without destruction of the chamber or unnecessary risk to the integrity of the work area. Such doors must be at least four (4) feet wide, and the distance between sets of doors must be at least four (4) feet.

5. No person or equipment shall leave the asbestos abatement project work area unless first decontaminated by showering, wet washing or HEPA vacuuming to remove all asbestos debris. No asbestos contaminated materials or persons shall enter the clean room.

6. Where feasible, decontamination systems shall abut the work area. In situations where it is not possible, due to unusual conditions, to establish decontamination systems contiguous to the work area, personnel shall be directed to remove visible asbestos debris from their persons by HEPA-filtered vacuuming prior to donning clean disposable coveralls while still in the work area, and proceeding directly to a remote decontamination system to shower and change clothes to follow work area exit procedures.

7. In specific situations where the asbestos contractor determines that it is not feasible to establish a contiguous decontamination system at a work site, the asbestos contractor shall utilize a remote decontamination system if

approved by Langan. Such systems must be operated in conformance with 29 CFR 1926.1101, Appendix F.

B. Remote Decontamination Facility:

For exterior work on the roof, glove bag or tent procedures, when full containment enclosure is not feasible, the Contractor shall provide remote personnel decontamination enclosure system if approved by the Consultant - Langan.

C. Occupied areas and/or building space not within the work areas shall be separated from asbestos abatement work areas by means of airtight barriers.

D. Construct the decontamination system with wood or metal framing, 3/8" sheathing and cover both sides with a double layer of six (6) mil polyethylene sheeting, spray glued or taped at the joints. Caulk joints watertight at floor, walls, and ceiling.

E. The Contractor and the Consultant shall visually inspect barrier several times daily to assure effective seal and the Contractor shall repair defects immediately

F. Waste/Equipment Decontamination Enclosure System:

This system is located adjacent to the work area. The equipment decontamination enclosure system, consisting of two totally enclosed spaces, shall be constructed as follows:

1. Equipment Washroom: An equipment washroom shall have two air locks: one adjacent to the work area and one common air lock which separate it from the holding area. The washroom shall have facilities for washing material containers and equipment. Gross removal of dust and debris from contaminated material containers and equipment shall be accomplished in the work area, prior to moving to the washroom.

2. Holding Area: A holding area shall share a common air lock with the equipment washroom and shall have a curtained doorway to outside areas. A hinged, lockable door shall be placed at the holding area entrance to prevent unauthorized access into the work area.

3. Remote Decontamination Facility: For exterior work on the roof, glove bag or tent procedures, when full containment enclosure is not required, the Contractor shall provide remote Waste/Equipment decontamination enclosure system as specified.

3.04 ABATEMENT REMOVAL PROCEDURES

A. Regulatory compliance will include, but is not necessarily limited to, applicable requirements set forth by the Federal Environmental Protection Agency (EPA), Connecticut Departments of Public Health (CTDPH), Connecticut Department of Environmental Protection, and Andover/Local Health and Building Departments.

B. The following procedures shall be followed while performing the abatement activities:

1. No asbestos abatement work, including preparation, shall be performed or continued without having proper notification and a certified supervisor at the work area. The Contractor shall have a designated "competent person" on the job at all times to ensure establishment of a proper enclosure system and proper work practices throughout the project.

2. Abatement work will not commence until authorized by the Consultant.

3. Provide and display danger signs at every entrance to the work areas in clearly visible locations indicating that asbestos removal work is being conducted and unauthorized and not protected persons should not enter.

   Signs must use the following legend:

   DANGER
   ASBESTOS
   CANCER AND LUNG DISEASE HAZARD
   RESPIRATORS AND PROTECTIVE CLOTHINGS
   ARE REQUIRED IN THIS AREA

   Signs shall be posted which meet the specifications set forth in 29 CFR 1926.1101 at all approaches to the work area. Signs shall be posted a sufficient distance from the work area to permit a person to read the sign and take precautionary measures to avoid exposure to asbestos.

4. The worker decontamination enclosure system shall be installed or constructed prior to plasticizing the work area or before disturbing ACM. The waste decontamination enclosure system shall be installed or constructed prior to commencement of gross removal work.

5. Following a federal court of appeals decision, the Occupational Safety and Health Administration has issued a final rule on June 29, 1988 removing regulation of asbestos containing asphalt roof cements, mastics and coatings from the OSHA standards for occupational exposure to asbestos in construction and shipyard work. However, friable materials (felts, papers, etc.) continue to be regulated by OSHA, federal (no visible emissions) and state entities. OSHA 8 hour asbestos roof training is required for this project at a minimum.

6. Exterior non-friable materials which are not RACM as defined by EPA and CTDPH are not required to be removed by a licensed asbestos abatement contractor in the State of Connecticut. This is applicable as long as methods of removal will not render the Category I non-friable roofing materials into RACM during the removal operations. No visible emissions are permitted during any time.

7. All asbestos handlers shall wear disposable suits, including gloves, hood and footwear, and appropriate respiratory equipment, after removing street clothes in the clean room.

8. Abatement of asbestos-containing materials shall be done by wet methods only.

9. ACM shall be sprayed with amended water in sufficient frequency and quantity for enhanced penetration. Sufficient time shall be allowed for penetration to occur prior to removal action or other disturbance-taking place. Dry removal of asbestos materials is prohibited.

10. In order to maintain indoor asbestos concentrations to the minimum, the wet asbestos must be removed in manageable sections. Material drop shall not exceed eight (8) feet. For heights up to 15 feet, provide inclined chutes or scaffolding to intercept drop. For heights exceeding 15 feet, the contractor shall provide an enclosed dust-proof chute.

11. Remove asbestos containing materials as appropriate by standard methods. Fill disposal containers as removal proceeds; seal filled containers and clean containers before removal to equipment decontamination system. Wet clean each container thoroughly, double bag and apply caution label. Ensure that workers do not exit the work area thorough the equipment decontamination enclosure.

12. After completion of stripping work, all surfaces from which asbestos has been removed shall be wet brushed, using a nylon brush, wet wiped, and sponged or cleaned by an equivalent method to remove all visible material (wire brushes are not permitted). During this work, the surfaces being cleaned shall be kept wet.

13. Remove and containerize all visible accumulations of asbestos-containing and/or asbestos-contaminated debris. During cleanup, utilize brooms, rubber dustpan, and rubber squeegees to minimize damage to floor covering.

14. Retrieve all free water in contaminated areas and place in plastic lined leak-tight drums.

15. Sealed disposal containers, and all equipment used in the work area, shall be included in the cleanup and shall be removed from work areas via the equipment decontamination enclosure at an appropriate time in the cleaning sequence. All asbestos waste in 6-mil polyethylene disposal bags shall be double bagged in the equipment decontamination enclosure before removal from the Site and properly labeled, including waste origination location.

16. At any time during asbestos removal, should the Consultant suspect contamination of areas outside the work area(s), he shall cause all abatement work to stop until the Contractor takes steps to decontaminate these areas and eliminate the causes of such contamination. Unprotected individuals shall be prohibited from entering suspected contaminated areas until air sampling and visual inspections certify decontamination.

17. If abatement includes containments, after completion of the initial final cleaning procedure including removal of the inner layers of polyethylene sheeting, but prior to encapsulation, a pre-sealant inspection shall be conducted by the Consultant. The pre-sealant inspection shall verify that ACM and residual dust has been removed from the work area.

18. After the work area has been inspected by the Engineer and rendered free of visible debris, a thin coat of a pigmented (non-transparent) encapsulating agent shall be applied to all surfaces in the work area from which ACM was removed, to lockdown nonvisible fibers.

19. Removal of asbestos containing materials shall be done under negative pressure containment (interior abatement and friable materials). All OSHA Class I, Class III, and interior Class II asbestos abatement projects shall employ HEPA negative air pressure equipment ventilation. The negative air pressure equipment shall operate continuously, twenty-four (24) hours a day, from startup of negative air pressure equipment, through the cleanup operations. A negative air pressure, relative to areas outside of the enclosure, shall be maintained at all times in the regulated abatement work area during the asbestos abatement project to ensure that contaminated air in the regulated abatement work area does not escape back to an uncontaminated area. A manometer shall be used to document the pressure differential for all OSHA Class I Large and Small size asbestos project regulated abatement work areas. A minimum of –0.02 column inches of water pressure differential, relative to pressure outside the regulated abatement work area, shall be maintained within the regulated abatement work area, as evidenced by manometric measurements. Exterior non-friable roofing abatement typically will not require containments.

3.05 CONSULTANT

A. The Owner has retained Langan Engineering (Langan) as the Hazardous Materials Consultant for the purpose of project design, construction administration, and project monitoring during Asbestos Abatement. Mr. Matthew Myers (License #000058) of Langan is the DPH-approved Asbestos Project Designer for this project. The Consultant will represent the Owner in all tasks of the abatement project at the discretion of the Owner. The Asbestos Abatement Contractor will regard the Consultant's direction as authoritative and binding as provided herein, in matters particularly but not limited to approval of work areas, review of monitoring results, completion of the various segments of work, final completion of the abatement, submission of data, and daily field punch list items.

3.06 CONSULTANT'S RESPONSIBILITIES

A. Air sampling shall be conducted by the Consultant to ascertain the integrity of controls that protect the building from asbestos contamination. Independently, the Contractor shall monitor air quality within the work area to ascertain the protection of employees and to comply with OSHA regulations.

B. The Consultant's project monitor shall collect and analyze air samples during two time periods:

1. Abatement Period: If required, the Consultant's project monitor shall collect samples on a daily basis during the work period. A sufficient number of area samples shall be taken outside of the work area, at the exhaust of the negative pressure system, and outside of the building to judge the degree of cleanliness or contamination of the building during removal. Additional samples may be taken inside the work area and decontamination enclosure system, at the discretion of the project monitor.

2. Post-Abatement Period (if abatement includes containments): The Consultant's project monitor shall conduct air sampling following the final cleanup phase of the project, once the "no visible residue" criterion, as established by the project monitor, has been met. Five (5) samples shall be collected inside the work area utilizing aggressive methods to comply with the State of Connecticut Department of Public Health Standards for Asbestos Abatement, sections 19a-332a-12. Analysis of the samples to determine airborne concentrations of asbestos shall be conducted by Transmission Electron Microscopy (TEM) method with an average limit of 70.0 structures per square millimeter of filter surface or by Phase Contrast Microscopy (PCM) with a limit of 0.01 fibers per cubic centimeters of air in accordance with the above Connecticut regulation sections.

C. The Consultant's project monitor shall provide continual evaluation of the air quality of the building during removal, using his/her best professional judgment in respect to the State of Connecticut Department of Public Health guideline of 0.010 fibers/cc and the background air quality established during the pre-abatement period.

D. If the project monitor determines that the building air quality has become contaminated from the project, he/she shall immediately inform the Contractor to cease all removal operations and implement a work stoppage clean up procedure. The Contractor shall conduct a thorough cleanup of the areas of the building designated by the Consultant. No further removal work can take place until the project monitor has assessed that the building air has been decontaminated.

E. Pre-abatement and abatement air samples shall be collected as required to obtain a minimum volume of 1,200 liters. Samples shall be analyzed by Phase Contrast Microscopy (PCM) methodology using the NIOSH 7400 protocol.

3.07 CONSULTANT'S INSPECTION RESPONSIBILITIES

A. The Consultant shall conduct inspection throughout the progress of the abatement project. Inspections shall be conducted in order to document the progress of the abatement work as well as the procedures and practices employed by the abatement Contractor.

B. The Consultant shall perform the following inspections during the course of abatement activities:

1. Pre-commencement Inspection: Pre-commencement inspections shall be performed at the time requested by the abatement Contractor. The Consultant shall be informed 12 hours prior to the time the inspection is needed. If, during the course of the pre-commencement inspection, deficiencies are found, the Contractor shall perform the necessary adjustments in order to obtain compliance.

2. Work Area Inspections: Work area inspections shall be conducted on a daily basis at the discretion of the Consultant. During the course of the work inspections, the Consultant shall observe the Contractor's removal procedures, verify barrier integrity, monitor negative air filtration devices (if applicable), assess project progress, and inform the abatement Contractor of specific remedial activities if deficiencies are noted.

3. Final Visual Inspection: The Consultant, upon request of the abatement Contractor, shall conduct a final visual inspection. Following the removal of the inner layer of polyethylene sheeting and prior to final air clearance, the Consultant shall conduct a final visual inspection inside the work area (if applicable). If residual dust or debris is identified during the course of the final inspection, the Contractor shall comply with the request of the Consultant in order to render the area "dust free." Once this visual inspection has passed the contractor will encapsulate the work area and all surfaces within.

3.08 CLEARANCE AIR TESTING

A. After the visual inspection is completed and all surfaces in the abatement area have dried, final air clearance sampling shall be performed by the Consultant if the abatement requires containment(s). Aggressive air monitoring will be used. Selection of location and samples shall be the responsibility of the Consultant. Air monitoring volumes shall be sufficient to provide a detection limit of 0.010 f/cm' using NIOSH-approved method for PCM analysis. For air clearance by Transmission Electron Microscopy, air-monitoring volumes shall be sufficient to provide a detection limit of 0.005 f/cm3 using the AHERA Level II Yamate Method.

B. Areas which do not comply with the Standard for Cleaning for Initial Clearance shall continue to be cleaned by and at the Contractor's expense until the specified Standard of Cleaning is achieved as evidenced by results of air testing as previously specified.

3.09 ASBESTOS WASTE DISPOSAL

A. The Contractor shall package, label, and remove all asbestos waste from the work area in accordance with Connecticut DEEP regulations, all other applicable regulations, and as specified below. Packaging shall be accomplished in a manner that minimizes waste volume, but insures waste containers shall not tear or break. All waste shall be transported in leak tight containers.

B. Asbestos wastes may include building materials, insulation, disposable clothing and protective equipment, plastic sheeting and tape, exhaust systems or vacuum filters, contractor equipment, or other materials designated by state or local authorities which have been potentially contaminated with asbestos and have not been fully cleaned.

C. Waste Labeling

1. Warning labels, having waterproof print and permanent adhesive in compliance with OSHA, EPA and CTDEEP/DOT/DPH requirements, shall be affixed to or printed on the sides of all waste bags or transfer containers. Warning labels shall be conspicuous and legible, and contain the following words:

DANGER
CONTAINS ASBESTOS FIBERS
AVOID CREATING DUST
CANCER AND LUNG DISEASE HAZARD

2. In compliance with NESHAP, 40 CFR, Part 61.150, all waste containers or bags shall be labeled with the following generator information:

a. Name of waste generator

b. Location of where waste was generated

D. Wetting of Waste: A fine water spray shall be used to keep the top layers of waste in containers thoroughly wet at all times. When a waste bag is full, air within the bags shall be evacuated with a HEPA equipped vacuum and be securely sealed with tape or other secure fastener.

E. Use and Decontamination of Fiber Drums: The Contractor's use and decontamination of fiber drums shall be in accordance with CTDPH, EPA and DOT requirements. The drums shall be lined with a minimum of two layers of 6-mil asbestos waste bags. The waste will be appropriately labeled and sealed. The drums shall be sealed with an airtight lid and shall be decontaminated and/or additionally bagged if the drums are filled inside the containment and visible

debris/contamination is observed on the exterior of the drums. All waste shall be labeled as previously described. The drums and waste will be re-containerized should their integrity be compromised and/or liquid is visibly passing through or staining the container.

F. Waste Container Storage: The container used for the storage of bagged contaminated waste shall be an enclosed dumpster. The dumpster shall have a solid metal roof and a solid metal door with padlock. At a minimum, line the cargo area with two layers of a 6-mil polyethylene sheeting to prevent contamination from damaged or leaking containers. Floor sheeting shall be installed first and shall extend up the sidewalls 24 inches minimum. Wall sheeting shall be overlapped and taped securely into place. No un-bagged contaminated waste or non-asbestos waste shall be stored in these dumpsters. Ensure that bags placed in dumpsters are undamaged. Warning signs shall be posted on the dumpster in accordance with Sections 29 CFR 1926.1101 of the OSHA regulations.

G. Waste Removal Scheduling: All waste containers shall be decontaminated and removed from the Site before final cleanup is started and isolation barriers are taken down.

H. Waste Transportation and Disposal

1. It is the responsibility of the Contractor to determine and insure that the Contractor and his/her subcontractor are complying with: 1) current waste handling regulations; and 2) the current regulations for transporting and disposing waste at the ultimate disposal landfill. The Contractor must comply fully with these regulations, and with all U.S. Department of Transportation, State, local, and EPA requirements.

2. The Contractor's waste hauler and disposal contractor shall maintain a valid hazardous waste transporter's permit and identification number; and obtain complete, and fully comply with any other local hazardous waste manifesting requirements.

3. Exercise care before and during transport to ensure that no unauthorized persons have access to the containerized ACW.

4. Do not transport ACW on open trucks. Treat and dispose of drums that have been contaminated as asbestos-containing waste.

5. A copy of ACW manifest forms shall be sent to the Owner after each disposal is completed and all required data and signatures have been inserted.

6. The Contractor shall return the original Disposal Certificate (landfill receipt) to the Owner within 10 working days of waste shipment from the Site.

END OF SECTION

SECTION 02-8313

LEAD-BASED PAINT AWARENESS

PART 1 - GENERAL

1.01 RELATED DOCUMENTS

A. General Provisions of the Contract, including General and Supplementary Conditions and other Division 1 Specification Sections, apply to this Section.

B. Refer to all drawings and/or other Sections of these specifications to determine the type and extent of work therein affecting the work of this Section, whether or not such work is specifically mentioned herein.

C. Sections containing requirements related to this Section include, but are not limited to:

1. Section 02-8200 – Selective Hazardous Building Materials Abatement Demolition

2. Section 02-8213 – Asbestos Abatement

3. Section 02-8416 – Universal Waste Removal and Recycling

4. Section 02-8432 – PCBs Assumed Greater than 50 PPM Sealant Abatement

5. HBM-01 – Hazardous Building Materials Abatement Drawing

1.02 SUMMARY OF WORK

A. Work of this Section includes, requirements for worker protection and waste disposal related to the limited roof and window replacement, renovation and demolition work involving components and surfaces containing lead at the UCONN Avery Point Campus Academic Building Site in Groton, Connecticut. All materials should be considered to contain lead-based paint. The wood window/wall systems and metal roof flashing were found to contain elevated levels of lead. The window waste (lecture hall area and stairwell – painted wood, caulking/glazing/sealant compounds) and roof caulking compounds must be disposed of as mixed asbestos and assumed PCB > 50 ppm hazardous waste. The contractor should assume painted wood waste will contain lead-based paint and pricing should include disposal as lead hazardous waste unless TCLP sampling proves otherwise and then a credit will be issued to the owner for disposal as non-lead-hazardous containing waste. The metal flashing can also be disposed of as hazardous waste with the window systems or recycled. The contractor is responsible for paying for all proper disposal of waste created from the project (mixed hazardous lead-based paint waste, asbestos, PCBs, etc.).

B. The procedures referenced herein shall be utilized during required renovation/demolition/roof/ window replacement work specified elsewhere in the Architect's Specification that might impact lead.

C. The removal and demolition impacting lead-based paint may result in dust and debris exposing workers to levels of lead above the OSHA Action Level. Worker protection, training, and engineering controls referenced herein shall be strictly adhered to, until completion of exposure assessment with results indicating exposures below the "Action Level". This section does not involve lead abatement, but identified worker protection requirements for trades involved in the demolition and disposal procedures if lead is involved in the waste stream.

1.03 DEFINITIONS

A. The following definitions relative to lead paint as used in this Section are offered:

1. Action Level (AL): The allowable employee exposure, without regard to use of respiratory protection, to an airborne concentration of lead over an eight (8) hour time weighted average (TWA), as defined by OSHA. The current action level is thirty micrograms per cubic meter of air (30 $\mu g/m^3$).

2. Area Monitoring: The sampling of lead concentrations, which is representative of the airborne lead concentrations that may reach the breathing zone of personnel potentially exposed to lead.

3. Biological Monitoring: The analysis of a person's blood and/or urine, to determine the level of lead concentration in the body.

4. Change Room: An area provided with separate facilities for clean protective work clothing and equipment and for street clothes, which prevents cross-contamination.

5. Competent Person: A person employed by the Contractor who is capable of identifying existing and predictable lead hazards in the surroundings or working conditions, and who has authorization to take prompt corrective measures to eliminate them as defined by OSHA.

6. Exposure Assessment: An assessment conducted by an employer to determine if any employee may be exposed to lead at or above the action level.

7. "High Efficiency Particulate Air" (HEPA): A type of filtering system capable of filtering out particles of 0.3 microns diameter from a body of air at 99.97% efficiency or greater.

8. Lead: Refers to metallic lead, inorganic lead compounds and organic lead soaps. Excluded from this definition are other organic lead compounds.

9. Lead Work Area: An area enclosed in a manner to prevent the spread of lead dust, paint chips, or debris resulting from lead-containing paint disturbance.

10. Lead Paint: Refers to paints, glazes and other surface coverings containing a toxic level of lead.

11. Permissible Exposure Limit (PEL): The maximum allowable limit of exposure to an airborne concentration of lead over an eight (8) hour time weighted average (TWA), as defined by OSHA. The current PEL is fifty micrograms per cubic meter of air (50 $\mu g/m^3$). Extended workdays lower the PEL by the formula: PEL equals 400 divided by the number of hours of work.

12. Personal Monitoring: Sampling of lead concentrations within the breathing zone of an employee to determine the 8-hour time weighted average concentration in accordance with 29 CFR 1926.62 and 29 CFR 1910.1025. Samples shall be representative of the employee's work tasks. Breathing zone shall be considered an area within a sphere with a radius of 18 inches and centered at the nose or mouth of an employee.

13. Resource Conservation Recovery Act (RCRA): RCRA establishes regulatory levels of hazardous chemicals. There are eight (8) heavy metals of concern for disposal: arsenic, barium, cadmium, chromium, lead, mercury, selenium, and silver. Six (6) of the metals are typically found in paints, excluding selenium and silver.

14. Toxic Level Of Lead: A level of lead, when present in dried paint or plaster, contains more than 0.50% lead by dry weight as measured by atomic absorption spectrophotometry (AAS) or 1.0 mg/cm' as measured by on-site testing utilizing an x-ray fluorescence analyzer. (Term is specific to State of CT regulations and HUD guidelines only)

15. Toxicity Characteristic Leachate Procedure (TCLP): The U.S. Environmental Protection Agency (US EPA) required sample preparation and analysis for determining the hazard characteristics of a waste material.

1.04 REGULATIONS AND STANDARDS

A. The following regulations, standards, and ordinances of federal, state, and local agencies are applicable and made a part of this specification by reference:

1. American National Standards Institute (ANSI) ANSI 288.2 - 1980 Respiratory Protection

2. Code of Federal Regulation (CFR)

a. 29 CFR 1910.134 - Respiratory Protection

b. 29 CFR 1910.1025 - Lead

c. 29 CFR 1926.62 - Lead in Construction Interim Final Rule

d. 29 CFR 1910.1200 - Hazard Communication

e. 29 CFR 1926.59 - Hazard Communication in Construction

f. 29 CFR 1926.55 - Gases, Vapors, Fumes, Dusts, and Mists

g. 29 CFR 1926.57 - Ventilation

h. 40 CFR 260 - Hazardous Waste Management Systems: General

3. 40 CFR 261 - Identification and Listing of Hazardous Waste

4. 40 CFR 262 - Generators of Hazardous Waste

5. 40 CFR 263 - Transporters of Hazardous Waste

6 40 CFR 264 - Owner and Operators of Hazardous Waste Treatment, Storage, and

7. Disposal Facilities

a. 40 CFR 265 - Interim Statutes for Owner and Operators of Hazardous Waste Treatment, Storage, and Disposal Facilities

b. 40 CFR 268 - Lead Disposal Restrictions

c. 40 CFR 172 - Hazardous Materials Tables and Communication Regulations

d. 40 CFR 178 - Shipping Container Specifications

e. 40 CFR 270 and 124 - Hazardous Waste Permits

8. Underwriters Laboratories, Inc. (UL) UL586 - 1990 High Efficiency Particulate Air Filter Units

1.05 QUALITY ASSURANCE

A. Hazard Communication Program

The Contractor shall establish and implement a Hazard Communication Program as required by 29 CFR 1926.59.

B. Compliance Plan (Site Specific)

The contractor shall establish a written compliance plan, which is specific to the project site, to include the following:

1. A description of work activity involving lead including equipment used, material included, controls in place, crew size, employee job responsibilities, operating procedures, and maintenance practices.

2. Methods of engineering controls to be used to control lead exposure.

3. The proposed technology the Contractor will implement in meeting the PEL.

4. Air monitoring data documenting the source of lead emissions.

5. A detailed schedule for implementing the program, including documentation of appropriate supply of equipment, etc.

6. Proposed work practice which establishes proper protective work clothing, housekeeping methods, hygiene facilities, and practices.

7. Worker rotation schedule, if proposed, to reduce TWA.

8 A description of methods for informing workers of potential lead exposure.

C. Hazardous Waste Management

The Contractor shall establish a Hazardous Waste Management Plan, which shall comply with applicable regulations and address the following:

1. Identification of hazardous wastes

2. Estimated quantity of waste to be disposed of

3. Names and qualifications of each sub-contractor that will be transporting, storing, treating, and disposing of wastes

4. Disposal facility location and 24 hour point of contact

5. Establish EPA state hazardous waste and identification numbers if applicable

6. Names and qualifications (experience and training) of personnel who will be working on-site with hazardous wastes

7. List of waste handling equipment to be used in performing the work to include cleaning, volume reduction, if applicable, and transport equipment

8. Qualifications of laboratory to be utilized for TCLP sampling and analysis

9. Spill prevention, containment, and cleanup contingency measures

10. Work plan and schedule for waste containment, removal, treatment, and disposal

D. Medical Examinations

1. Before exposure to lead contaminated dust, provide workers with a comprehensive medical examination as required by 29 CFR 1910.1025 and 29 CFR 1926.62.

2. The examination shall not be required if adequate records show that employees have been examined as required by 29 CFR 1926.62 within the last year.

3. Medical examination shall include, at a minimum, approval to wear respiratory protection and biological monitoring.

E. Training

1. The Contractor shall ensure that workers are trained to perform lead paint disturbing activities and disposal operations prior to the start of work in accordance with 29 CFR 1926.62.

F. Respiratory Protection Program

1. The Contractor shall furnish each employee required to wear a negative pressure respirator with a respirator fit test at the time of initial fitting and at least once every six (6) months thereafter as required by 29 CFR 1926.62.

2. The Contractor shall establish a Respiratory Protection Program in accordance with ANSI Z88.2, 29 CFR 1910.134, and 29 CFR 1926.62.

1.06 SUBMITTALS

A. The Contractor shall submit to the Owner the following submittals prior to start of work:

1. Copies of medical records for each employee to be used on the project, including results of biological monitoring and a notarized statement by the examining physician that such an examination took place.

2. Copies of workers' training certificates.

3. Submit record of successful respirator fit testing performed by a qualified individual within the previous six (6) months, for each employee to be used on this project with the employee's name and social security number with each record.

4. The name and address of Contractor's blood lead testing lab, OSHA-CDC listing, and Certification in the State of Connecticut.

5. The name and address of Contractor's personal air monitoring and waste disposal lead testing laboratory/ies.

6. Name, address, and ID number of the hazardous waste hauler, waste transfer route, and proposed disposal site.

B. The Contractor shall submit to the Owner the following submittals during the job:

1. Results from personal air samples.

2. Medicals, certificates, and fit test 24 hours in advance of any new employee starting on the project.

C. The Contractor shall submit to the Owner the following submittals upon completion of the work:

1. Copies of manifests and receipts acknowledging disposal of all hazardous waste material from the project showing delivery date, quantity, and appropriate signature of landfill's authorized representative.

1.07 PERSONAL PROTECTION

A. Exposure Assessment

1. The Contractor shall determine if any worker will be exposed to lead at or above the action level.

2. The exposure assessment shall identify the level of exposure a worker would be subjected to without respiratory protection.

3. The exposure assessment shall be achieved by obtaining personal monitoring samples representative of a full shift at least (8-hour TWA).

4. During the period of the exposure assessment, the Contractor shall institute the following procedures for protection of workers.

a. Protective clothing shall be utilized

b. Respiratory protection

c. Change areas shall be provided

d. Hand washing facilities and shower

e. Biological monitoring

f. Training of workers

B. Respiratory Protection

1. The Contractor shall furnish appropriate respirators approved by NIOSH/MSHA for use in atmospheres containing lead dust.

2. Respirators shall comply with the requirements of 29 CFR 1926.62.

3. Workers shall be instructed in all aspects of respiratory protection.

4. The Contractor shall have an adequate supply of HEPA filter elements and spare parts on site for all types of respirators in use.

5. The following minimum respirator protection for use during paint removal or demolition of components and surfaces with lead paint shall be the 1/2 mask air purifying respirator with high efficiency filters for exposures (not in excess of 500 µg/m^3 or 10 x PEL).

C. Protective Clothing

1. Personal protective clothing shall be provided for all workers, supervisors, and authorized visitors entering the work area.

2. Each worker shall be provided with a minimum of two (2) complete disposable coverall suits.

3. Removal workers shall not be limited to two (2) suits, and the Contractor shall supply additional suits as necessary.

4. Under no circumstances shall anyone entering the abatement area be allowed to re-use a contaminated disposable suit.

5. Disposable suits, such as TYVEK suits, and other personal protective equipment (PPE) shall be donned prior to entering the lead control area. A change room shall be provided for workers to put on suits and other personal protective equipment with separate areas to store their street clothes.

6. Eye protection for personnel engaged in lead operations shall be furnished when the use of a full-face respirator is not required.

7. Goggles with side shields shall be worn when working with power tools or a material that may splash or fragment, or if protective eye wear is specified on the Material Safety Data Sheet (MSDS) for a particular product to be used on the project.

1.08 PERSONAL MONITORING

A. General: The Contractor is required to perform the personal air sampling activities during lead paint disturbing work. The results of such sampling shall be posted, provided to individual workers and submitted to the Owner as described herein.

B. Sampling: Samples shall be taken for the duration of the work shift or for eight hours, whichever is less. Personal samples need not be taken every day after the first day if working conditions remain unchanged, but must be taken every time there is a change in removal operations, either in terms of the location or the type of work. Sampling will be used to determine eight-hour Time-weighted averages (TWA). The Contractor is responsible for personal sampling as outlined in OSHA Standard 29 CFR 1926.62 and 29 CFR 1910.1025.

C. Sampling Results: Air sampling results shall be reported to individual workers in written form no more than forty-eight (48) hours after the completion of a sampling cycle. The reporting document shall list each sample's result, sampling time and date, personnel monitored and their social security numbers, flow rate, sample

duration, sample yield, cassette size, and analysts' name and company, and shall include an interpretation of the results. Air sample analysis results will be reported in micrograms/cubic meter (µg/m').

D. Testing Laboratory: The Contractor's testing lab shall be participating in AIHA's Environmental Lead Laboratory Accreditation Program (ELLAP). The Contractor shall submit to the Consultant for review and acceptance, the name and address of the laboratory, certification(s) of AIHA participation, a listing of relevant experience in air lead analysis, and presentation of a documented Quality Assurance and Quality Control Program.

PART 2 - PRODUCTS

2.01 GENERAL

A. Any substitution in materials, equipment, or methods to those specified shall be approved by the Owner prior to use. Any requests for substitution shall be provided in writing to the Owner. The request shall clearly state the rationale for the substitution.

B. Submit to the Owner product data of all materials and equipment and samples of all materials to be considered as an alternate.

C. Product data shall consist of manufacturer; catalog sheets, brochures, diagrams, schedules, performance charts, illustrations, safety data sheets (SDS), and other standard descriptive data. Submittal data shall be clearly marked to identify pertinent materials, products or equipment and show performance characteristics and capacities.

D. Samples shall be of sufficient size and quantity to clearly illustrate the functional characteristics of the product or material with integrally related parts and attachment devices.

2.02 MATERIALS AND PRODUCTS

A. Deliver all materials in the original packages, containers, or bundles bearing the name of the manufacturer and the brand name and product technical description.

B. Damaged or deteriorating materials shall not be used and shall be removed from the premises.

C. The Contractor shall have available sufficient inventory or dated purchase orders for materials necessary for the job including protective clothing, respirators, filter cartridges, polyethylene sheeting of proper size and thickness, tape, and air filters.

D. Materials:

1. Polyethylene sheet in a roll size to minimize the frequency of joints shall be delivered to job site with factory label indicating 6 mil.

2. Polyethylene disposable bags shall be six (6) mil. Tie wraps for bags shall be plastic, five (5) inches long (minimum), pointed and looped to secure filled plastic bags.

3. Tape or adhesive spray will be capable of sealing joints in adjacent polyethylene sheets and for attachment of polyethylene sheet to finished or unfinished surfaces of dissimilar materials and capable of adhering under both dry and wet conditions, including use of amended water.

4. Impermeable containers are to be used to receive and retain any lead containing or contaminated materials until disposal at an acceptable disposal site. (The containers shall be labeled in accordance with EPA and DOT standards.)

5 HEPA filtered exhaust systems shall be used during powered dust generating abatement operations. The use of powered equipment without HEPA exhausts is prohibited.

2.03 TOOLS AND EQUIPMENT

A. Provide suitable tools for all lead disturbing operations.

B. The Contractor shall have available power cables or sources such as generators (where required).

C. Vacuum units, of suitable size and capacities for the project, shall have HEPA filter(s) capable of trapping and retaining 99.97% of all mono-dispersed particles of 0.3 micrometers in diameter.

PART 3 - EXECUTION

3.01 WORKER PROTECTION/TRAINING

A. The Contractor shall provide appropriate training, respiratory and other personal protection, and biological monitoring for each worker and ensure proper usage during potential lead exposure and the initial exposure assessment.

B. Workers who will perform procedures must have completed one or more of the following training courses:

1. EPA Lead Abatement Supervisor (40 hours)

2. EPA Lead Abatement Worker (32 hours)

3. HUD/EPA course "Work Smart, Work Wet, and Work Clean to Work Lead Safe" (8 hours)

4. HUD/NARI course "The Remodeler's and Renovator's Lead Based Paint Training Program" (8 hours).

5. HUD "Lead Safe Work Practices" (8 hours)

6. EPA Lead Renovation, Repair and Painting Program Course

3.02 CONTRACTOR'S RESPONSIBILITIES

A. The Contractor is responsible for establishing and maintaining controls referenced herein to prevent dispersal of lead contamination from the lead work area.

B. The Contractor is also responsible for conducting work with applicable federal, state, and local regulations as referenced herein.

3.03 WORKER HYGIENE PRACTICES (REQUIRED DURING INITIAL EXPOSURE ASSESSMENT AND IF RESULTS OF AIR SAMPLING ARE ABOVE OSHA ACTION LEVEL)

A. Work Area Entry: Workers shall don personal protective equipment prior to entering work area, including respiratory protection, disposable coveralls, gloves, headgear, and footwear.

B. Work Area Departure: While leaving respirators on, workers shall remove all gross contamination, debris, and dust from disposable coveralls and proceed to change room and remove coveralls and footwear and place in hazardous waste disposal container.

C. Hand washing Facilities: All workers must wash their hands and faces upon leaving the work area.

D. Equipment: All equipment used by workers inside the work area shall be wet wiped or bagged for later decontamination before removal from the work area.

E. Prohibited Activities: Under no circumstances shall workers eat, drink, smoke, chew gum, or tobacco, or remove their respirators in the work area.

F. Shock Hazards: The Contractor is responsible for using safe procedures to avoid electrical hazards. All temporary electrical wiring will be protected by ground fault circuit interrupters (GFI).

3.04 LEAD WORK AREA (REQUIRED DURING INITIAL EXPOSURE ASSESSMENT AND IF RESULTS OF AIR SAMPLING ARE ABOVE OSHA ACTION LEVEL)

A. The Contractor shall place warning signs at all entrances and exits from the work area. Signage shall be a minimum of 20" x 14" and shall state the following:

WARNING
LEAD WORK AREA
POISON
NO SMOKING OR EATING OR DRINKING
UNAUTHORIZED ENTRY PROHIBITED

B. The Contractor shall designate a change room as specified in this Section. The change room shall consist of two (2) layers of sheeting on the floor surface adjacent to the lead work area. The change room shall have separate storage facilities for street clothes to avoid cross contamination.

C. The Contractor shall provide potable water for hand and face washing and provide a portable shower unit.

D. The Contractor shall place six-mil polyethylene drop cloths on floor/ ground surfaces prior to beginning removal work to facilitate clean-up.

3.05 WORK AREA CLEAN UP

A. The Contractor shall remove all loose chips and debris from floor surfaces and place in hazardous waste disposal bags.

B. The Contractor shall HEPA vacuum adjacent surfaces to remove dust and debris.

C. Polyethylene drop cloths shall be properly disposed of.

3.06 WASTE DISPOSAL

A. The Contractor's contractual liability shall be the proper disposal of all non-hazardous and hazardous wastes generated at the site in accordance with all applicable federal, state, and local regulations as referenced herein. The window waste (lecture hall area and stairwell – painted wood, caulking/glazing/sealant compounds) and roof caulking compounds must be disposed of as mixed asbestos and assumed PCB > 50 ppm hazardous waste. The contractor should assume painted wood waste will contain lead-based paint and pricing should include disposal as lead hazardous waste unless TCLP sampling proves otherwise and then a credit will be issued to the owner for disposal as non-lead-hazardous containing waste. The metal flashing can also be disposed of as hazardous waste with the window systems or recycled. The contractor is responsible for paying for all proper disposal of waste created from the project (construction waste, hazardous lead-based paint waste, asbestos, PCBs, etc.).

END OF SECTION

SECTION 02-8416

UNIVERSAL WASTE REMOVAL AND RECYCLING

PART 1 - GENERAL

1.01 RELATED DOCUMENTS

A. General Provisions of the Contract, including General and Supplementary Conditions and other Division 1 Specification Sections, apply to this Section.

B. Refer to all drawings and/or other Sections of these specifications to determine the type and extent of work therein affecting the work of this Section, whether or not such work is specifically mentioned herein.

C. Sections containing requirements related to this Section include, but are not limited to:

1. Section 02-8200 – Selective Hazardous Building Materials Abatement Demolition

2. Section 02-8213 – Asbestos Abatement

3. Section 02-8313 – Lead-Based Paint Awareness

4. Section 02-8432 – PCBs Assumed Greater than 50 PPM Sealant Abatement

5. HBM-01 – Hazardous Building Materials Abatement Drawing

1.02 SUMMARY OF WORK

A. Work of this Section includes, but is not necessarily limited to, all which is necessary for complete removal and recycling/disposal of any hazardous materials, wastes and special wastes that exist in the interior/exterior of the building structure(s)/additions and that might be impacted by proposed roof and window replacement. The hazardous materials abatement contractor will supply the packaging materials and pay for the proper disposal of these materials. The hazardous materials abatement contractor will provide the labor to put the materials into the proper packaging for disposal. The work will include but is not limited to:

1. Removal, characterization (any testing that may be required by disposal facility) and disposal of hazardous chemicals;

2. Removal, characterization (any testing that may be required by disposal facility) and disposal of fluorescent light ballasts and capacitors;

3. Removal, characterization (any testing that may be required by disposal facility) and disposal of contained gear oils, hydraulic oils and refrigeration liquids, etc. from various pieces of equipment;

4. Removal, characterization (any testing that may be required by disposal facility) and recycling/disposal of batteries, electronic devices, lighting signage, etc;

5. Removal, characterization (any testing that may be required by disposal facility) and recycling/disposal of air conditioning units, HVAC systems and mechanical units, etc;

6. File all necessary notices, obtain all permits and licenses, and pay all governmental taxes, fees, and other costs in connection with the work. Obtain all necessary approvals of all governmental departments having jurisdiction and

7. Comply with Health and Safety Plans.

B. The Contractor, under this Section, shall provide all materials, labor, equipment and appliances as necessary to properly remove and recycle/dispose of materials.

1.03 DESCRIPTION OF WORK

A. This specification covers the proper and legal removal and disposal/recycling of all Universal Waste to be impacted by work from the UCONN Avery Point Campus Academic Building Site in Groton, Connecticut. The removal and disposal activities shall comply with all aspects of the contract documents and Federal, State and local requirements.

B. Universal Wastes shall include, but not be limited to, air conditioning units, fluorescent bulbs, light fixture ballasts containing polychlorinated bi-phenyls (PCBs) or DEHP, mercury lamps, thermostats and switches, batteries, fire extinguishers, Halon fire suppression systems, paint, chemicals, refrigerants, electronic devices (computers and monitors), illuminated signage, emergency lighting, and other compressed gases, mechanical fluids, oils, and lubricants.

C. Whenever there is a conflict or overlap within these specifications and between applicable codes and regulations, the most stringent provision specified shall apply. The three story Academic Building was constructed circa 1940 and is approximately 50,000 square feet.

D. The proposed renovation/improvements consist of removal and replacement of limited areas of roofing and window systems.

E. The Contractor shall independently identify and quantify all Universal Waste Items.

1.04 SUBMITTALS

A. Before Start of Work: Submit the following to the Owner's Representative for review. Do not start work until these submittals are returned with Owner's Representative's approval.

1. Copy of State or local license for hazardous waste hauler;

2. Certification of at least one on-site supervisor which has satisfactorily completed the OSHA 40 Hour Health and Safety Course for Handling Hazardous Materials;

3. Certificates of workers which have successfully completed at least the OSHA 40-Hour Health and Safety Course for Hazardous Materials;

4. Certificates of workers which have successfully completed the required employee training for universal waste or appropriate type of training to the type of wastes being managed;

5. Name and address of the universal waste handler and/or a destination facility where the waste materials is to be treated, deposited or recycled in accordance with all regulatory requirements (include contact person and telephone numbers), if the universal waste meets the definition of hazardous waste, the name and address of the hazardous waste treatment, storage and disposal (TSD) facility;

6. Work Plan: Provide a detailed written work plan that describes the procedures for the removal,

   a. Proposed level of worker training for each type of regulated and/or hazardous material to be removed.

   b. Names and applicable licenses of key personnel.

   c. Proof of appropriate training for workers.

   d. Proof of a current medical surveillance program for all personnel.

   e. Safety Data Sheets (SDS) for any chemicals to be used on the project. All products to be used on this project must have SDS approved by the Owner's Environmental Consultant.

   f. Proposed detailed work schedule.

   g. Following final removal, and disposal or destruction, provide Owner with waste transport and disposal documents (e.g., manifests), as well as certificates of destruction and recycling as appropriate.

1.05 CODES AND REGULATIONS

A. Regulatory compliance includes but is not necessarily limited to applicable requirements set forth by :

1. Federal Regulations:

   a. 29 CFR 1910, "Occupational Safety and Health Standards"(General Industry Standards)

b. 29 CFR 1910.134 “Respiratory Protection”

c. 29 CFR 1910.1200 “Hazard Communication”

d. 29 CFR 1926, “Safety and Health Regulations for Construction” (Construction Industry Standards)

e. 40 CFR 50, “National Primary and Secondary Ambient Air Quality Standards”

f. 40 CFR 60, “Standards of Performance for New Stationary Sources,” Appendix B, “Test Methods”

g. 40 CFR 117, “Determination of Reportable Quantities for Hazardous Substances”

h. 40 CFR 122, “USEPA Administered Permit Program: The National Pollutant Discharge Elimination System”

i. 40 CFR 172, “Hazardous Waste Transportation”

j. 40 FR 261, “Identification and Listing of Hazardous Waste”

k. 40 CFR 262, “Standards Applicable to Generators of Hazardous Waste”

l. 40 CFR 263, “Standards Applicable to Transporters of Hazardous Waste”

m. 40 CFR 268, “Land Disposal Restrictions”

n. 40 CFR 273, “Universal Waste Rule”

o. 40 CFR 300, “National Oil and Hazardous Substances Pollution Contingency Plan”

p. 40 CFR 302, “Designation, Reportable Quantities, and Notification”

q. 40 CFR 112 (oil pollution prevention)

r. 40 CFR 279 (used oil)

s. 40 CFR 273 (Universal Wastes)

t. 40 CFR 761 (PCBs)

u. Toxic Substances Control Act (TSCA), US-EPA

v. Resource Conservation and Recovery Act (RCRA)

w. Comprehensive Environmental Response, Compensation & Liability Act (CERCLA) (Superfund Law)

2. Connecticut Regulations:

State requirements which govern universal waste removal and disposal include but are not necessarily limited to the following:

a. Connecticut Department of Environmental Protection (DEEP) (Hazardous and Universal Waste Management Regulations); Section 22a-454, 456 Waste Facility and Section 22a-449(c)-113 of the Regulations of Connecticut State Agencies (RCSA), respectively.

b. Connecticut DEEP; 310 CMR 40 Connecticut Contingency Plan, 310 CMR 30 Hazardous Waste Regulations, 310 CMR 1-7 Clean Water Act, 310 CMR 16, 19 Solid Waste Regulations, 314 CMR 1-8 Clean Air Act

c. Local Town, City or County Bylaws, rules and regulations.

B. Under TSCA, items that contain more than 500 parts per million (PPM) of PCB's are classified as PCB material, items that contain between 50 ppm and 500 ppm of PCB are classified as PCB-contaminated and items that contain less than 50 ppm of PCBs are classified as non-PCB items (unless an unauthorized use is determined).
Under the Small Capacitor Exemption, TSCA has allowed the disposal of non-leaking, intact "small capacitors", defined as containing less than three pounds of PCB dielectric fluid, in a municipal solid waste landfill. Light ballasts containing a small PCB capacitor are covered under this category. The intent of the "small capacitor" disposal rule is for "random disposal" in a landfill by "householders and other infrequent disposers". When commercial and industrial entities dispose of large quantities of small PCB capacitors, the EPA strongly encourages voluntary collection and disposal of PCB capacitors in chemical waste landfills or high-temperature incinerators.

C. Under the "Superfund" laws, PCBs are specifically listed as a hazardous substance. The "release" of more than one pound of PCBs into the environment triggers a "Superfund" notification and cleanup requirement.
Since twenty-five ballasts collectively contain approximately one pound of PCBs, the disposal of twenty five or more PCB-containing ballast in a landfill would trigger a "Superfund" action.

D. The State of Connecticut General Hazardous Waste Statue 22A 454, 456 requires that PCB ballast must be incinerated or sent to a chemical waste landfill. The statue defines PCB waste, including PCB ballast, as Connecticut Regulated Wastes.

E. Other Regulations: The other relevant regulations affecting disposal of PCB's include the following:

1. Department of Transportation (DOT) regulations – DOT regulation HM-181 regulates transportation of hazardous materials, including PCBs.

2. Occupational Safety and Health Administration (OSHA) – OSHA regulates worker's safety and exposure to a variety of chemicals including PCB's.

3. Resource Conservation and Recovery Act (RCRA) – RCRA regulates wastes, which fail Toxic Characteristic Leachate Procedure (TCLP) and which contain more than 50 ppm of PCBs.

PART 2 - PRODUCTS

2.01 GENERAL

A. 35 or 55-gallon metal, fiber drums or containers with lids that can be secured and sealed, DOT approved.

B. Appropriate waste labels identifying contents as regulated and hazardous wastes as defined by 49 CFR 172.

C. Fluorescent Lamp Disposal (Crusher) units, such as DexTrite Fluorescent® Lamp Disposal equipment, or equivalent. Such equipment must be capable of capturing fugitive mercury vapors during the bulb crushing process, as well as the fractured and broken waste products.

D. HEPA and charcoal filter equipped mercury capture vacuum.

E. Cardboard boxes and sleeves for packaging lamps that will be removed from the site intact or unbroken.

F. Recovery tanks to temporarily hold compressed gasses.

G. Health & Safety equipment complying with health and safety plan.

PART 3 - EXECUTION

3.01 GENERAL

A. Procedures and methods contained herein are to provide guidance to protect from the contamination of the environment, and exposure to workers, while handling hazardous waste and regulated waste-streams for disposal/recycling/destruction.

B. Owner to Stop Work: The Owner's representative and the Owner's Environmental Consultant shall have the authority to stop the work at any time that conditions are not within Specification and/or applicable regulations. The stoppage of work shall continue until conditions have been corrected to the satisfaction of the Owner's representative or Owner's Environmental Consultant. Standby time to resolve the problems shall be at the Contractor's expense.

C. Personal Protective Equipment:

1. Personal protective equipment shall consist of (at a minimum) safety goggles or other protective eye-ware, work shoes with non-slip soles (e.g., neoprene), chemical resistant gloves that cover the hand and an apron that covers the front of the worker's body from shoulder to toes (e.g., neoprene or nitrile gloves).

2. Personal protective equipment contaminated by handling operations should be disposed of as contaminated waste.

3. Hammering or sudden impact methods for removing ballast's from the light fixture shall not be employed, as such methods may cause leakage in an otherwise non-leaking ballast.

4. Throwing and tossing of ballast's into disposal drums shall not be conducted, as such activities may cause leakage in an otherwise non-leaking ballast.

D. Work Procedures

1. Contractor shall obtain a hazardous waste generator number from Region I, US EPA for the Owner.

2. During the light fixture removal stage during demolition, the following procedures (or equivalent alternate but protective measures) shall be followed:

   a. Carefully remove fixtures, and stack them in a designated portion of the work area.

   b. Designate an area where the fixtures can be disassembled, and components removed and segregated (e.g., lamps, ballasts). The area should be remote from other demolition activities, and have adequate ventilation and lighting.

   c. The work area for fixture disassembly shall (at a minimum) have the floor lined with one layer of 6-mil fire-retardant polyethylene plastic to control accidental spills or breakage. The work area should have a table or other solid work platform to facilitate disassembly of the fixtures, and the protective plastic sheeting should cover the work table area and waste drums/lamp crushing/lamp repackaging equipment.

   d. Carefully remove lamps from fixtures and repackage them for disposal.

   e. In the event a lamp breaks, utilize the mercury capture vacuum to remove all debris generated.

3. Carefully remove ballasts, and segregate for disposal in the following manner:

a. Ballasts labeled as "No-PCBs" shall NOT be segregated and shall be treated as PCB waste as potting material may contain PCBs and DEHP. Handle and dispose of in the same manner as ballasts containing PCBs and/or DEHP.

b. Non-leaking ballasts shall be segregated and drummed for disposal as hazardous wastes. These ballasts may be destroyed by high temperature incineration, or land filled at a properly permitted facility.

c. Leaking ballasts shall be segregated and drummed. Punctures or damage to these ballasts exposes an oily or tar-like substance. These ballasts, and all materials it contacts, MUST be incinerated under TSCA; they cannot be landfilled.

E. Miscellaneous Stored Materials In Containers

1. Miscellaneous materials may include antifreeze, cleaning solutions, paints, and other miscellaneous materials.

2. During removing/recycling of materials enclosed in their original container, the Contractor shall package, and label (lab packed) by waste classification in accordance with appropriate RCRA and Connecticut Department of Transportation (ConnDOT). In turn these containers shall be transported, under proper manifesting procedures, to a recycling facility. The facility shall forward a certificate of recycling or disposal to the Contractor, who shall submit this information to the Owner.

F. Universal Waste

1. Universal waste includes, but is not limited to, air conditioning units, fluorescent bulbs, light fixture ballasts containing polychlorinated bi-phenyls (PCBs) or DEHP, mercury lamps and switches, batteries, fire extinguishers, Halon fire suppression systems, paint, refrigerants, electronic devices (computers and monitors), illuminated signage, emergency lighting, and other compressed gases, mechanical fluids, oils, and lubricants, as defined in 40 CFR 273 and Section 22a-449(c)-113 of the Regulations of Connecticut State Agencies (RCSA). Follow procedures for handling, storage, labeling, shipping, recording keeping and other procedures as required in 40 CFR 273 and Section 22a-449(c)-113.

G. Regulated Waste

1. Non-thermostat mercury switches: Handle and dispose of in accordance with State regulation and applicable Federal regulations.

2. Used oil: Handle and dispose of in accordance with State regulations.

3. Refrigerants: Prior to disposal of refrigerant containing equipment, verify that refrigerant has been removed per the requirements of 40 CFR Part 82 (Protection of Stratospheric Ozone).

4. Diesel fuel: If possible, use on site to run equipment. Dispose of or recycle any remaining fuel as per applicable regulations.

5. Fire extinguishers: Contact manufacturer for recycling or donate to local fire department.

6. Halon Fire Suppression System: For recovery and management of Halon, utilize a technician EPA certified in appropriate level for the system. Technician is to use an EPA-certified reclaimer for disposal.

H. Transportation

1. Transport waste materials using properly permitted vehicles operated by drivers with Commercial Drivers Licenses (CDLs) and Hazardous Materials endorsements. Coordinate transportation routes with Connecticut Department of Transportation (ConnDOT). Provide Owner with copies of transporter certifications and EPA ID number a minimum of seven (7) days prior to first use. Chain of custody records shall be maintained which include the date of pickup, number of drums, name of transporter and destination.

I. Waste Disposal Documentation

1. Waste shipment records and manifests for all materials transported from the site as required by regulations and disposal facility are to be provided to the Owner every five (5) business days. Incorporate this information into the close out package to be provided to the Owner. Within thirty (30) days of generation, Contractor shall provide waste manifests/shipment records and Certificates of Recycling and Disposal (CRD) to Owner.

2. Certificates of Discontinuance for all equipment and fixtures.

J. Disposal Facilities

1. Contractor shall use only disposal facilities which have been pre-approved by the Owner and its insurers and with valid regulatory permits for type of waste being handled. Provide Owner with copies of disposal facility regulatory permits and EPA identification number a minimum of seven (7) days prior to shipping to that facility. Provide disposal facility required documentation including additional waste sampling.

END OF SECTION

SECTION 02-8432

PCBS ASSUMED GREATER THAN 50 PPM SEALANT ABATEMENT

PART 1 - GENERAL

1.01 RELATED DOCUMENTS

A. Drawings and General Provisions of Contract, including General Supplementary Conditions apply to this Section.

B. Sections containing requirements related to this Section include, but are not limited to:

1. Section 02-8200 – Selective Hazardous Building Materials Abatement Demolition

2. Section 02-8213 – Asbestos Abatement

3. Section 02-8313 – Lead-Based Paint Awareness

4. Section 02-8416 – Universal Waste Removal and Recycling

5. HBM-01 – Hazardous Building Materials Abatement Drawing

1.02 CONSULTANT

A. Langan CT, Inc. (Langan) has been retained as the Consultant for the purposes of construction administration and project monitoring during abatement of known and assumed hazardous building materials. The Consultant will represent the Owner in all phases of the abatement project at the discretion of the Owner. The Abatement Contractor shall regard the Consultant's direction as authoritative and binding as provided herein, in matters particularly but not limited to approval of work areas, review of monitoring results, completion of the various segments of work, final completion of the abatement, submission of data, and daily field punch list items.

1.03 USE OF THE CONTRACT DOCUMENTS

A. It shall be incumbent upon the Abatement Contractor to visit the Site and determine what exists, its condition, and what will be required to accomplish the Work intended by the Contract Documents. No increase in the Contract Sum will be permitted as a result of the Abatement Contractor's failure to visit the Site and understand the existing conditions.

B. All work shall comply with applicable Codes, laws, regulations, and ordinances wherever applicable. The most stringent of all the foregoing shall govern.

C. It is not intended that the Specifications show every detail of the Work, but the Abatement Contractor shall be required to furnish within the Contract Sum all material and labor necessary for the completion of the Work in accordance with the intent of the Specifications.

D. In case of ambiguity among the Contract Documents, the more stringent requirement as determined by the Consultant shall prevail.

E. The Work of this Contract includes making modifications as necessary, subject to approval by Owner in consultation with the Consultant, to correct any conflicts.

F. All items, not specifically mentioned in the Specifications but implied by trade practices to complete the work, shall be included.

G. The Contractor or Abatement Subcontractor shall be aware of all conditions of the Project and is responsible for verifying quantities and locations of all Work to be performed. Failure to do so shall not relieve the General Contractor or Abatement Subcontractor of its obligation to furnish all labor and materials necessary to perform the Work.

1.04 EXAMINATION OF THE SITE

A. It is understood that the Abatement Contractor has examined the Site and made his/her own estimates of the facilities and difficulties attending the execution of the Work, and has based his price thereon.

B. Except for unforeseeable concealed conditions as determined by the Consultant, the Abatement Contractor shall make no claim for additional cost due to the existing conditions at the Site.

1.05 CONTRACTOR QUALIFICATIONS

A. All bidders shall submit a record of prior experience in PCB abatement projects, specifically including removal of assumed PCB-containing materials, listing no less than three (3) completed jobs in the past year, with all projects being of similar size and scope. The Abatement Contractor shall list the experience and training of the project foremen and all on-site personnel. The information that should be included is as follows:

1. Project Name and Address

2. Owner's Name and Address

3. Architect/Consultant

4. Contract Amount

5. Date of Completion

6. Extras and Changes

B. Submit a written statement regarding whether the Abatement Contractor has ever been found out-of-compliance with federal or state regulations pertaining to worker protection, removal, transport, or disposal of regulated and/or hazardous waste.

1.06 TESTING LABORATORY SERVICES

A. The Abatement Contractor shall submit to the Consultant the name; address and qualifications of proposed laboratories intended to be utilized for sample analysis as required by this section.

1.07 GENERAL REQUIREMENTS

A. The Abatement Contractor shall furnish all labor, materials, facilities, equipment, installation services, employee training, notifications, permits, licenses, certifications, agreements and incidentals necessary to perform the specified work. Work shall be performed in accordance with the contract documents, the latest regulations from the Occupational Safety and Health Administration (OSHA), the United States Environmental Protection Agency (US EPA), and all other applicable federal, state and local agencies. Whenever the requirements of the above references conflict or overlap, the more stringent provision shall apply.

B. All project personnel engaged in the work covered under this section shall be trained in accordance with OSHA Regulations 29 CFR 1910.1000 and 29 CFR 1910.1200. It should also be noted that work associated with removal activities could involve exposure to PCBs during demolition and removal activities specified herein and the Abatement Contractor shall perform required exposure assessment for PCBs.

C. The Abatement Contractor shall provide a Project Health and Safety Officer having a minimum of eight (8) hours of supervisor training in hazardous waste site operations in accordance with the requirements of 29 CFR 1910.1200. The supervisor must be on site at all times during abatement work. This supervisor and other contractor representatives must attend a pre-abatement meeting to be scheduled by the building owner/owners representative.

D. The general/abatement contractors shall only use heavy equipment operators that have proper asbestos and/or hazwoper training when disturbing/removing/moving and packing asbestos, lead and assumed PCB containing materials. Acceptable training for asbestos can be 32-hour asbestos worker training or 40-hour asbestos supervisor training with annual refresher training. 40-hour hazwoper training and annual refresher training is required for operators handling lead and/or assumed PCB containing/contaminated materials. All operators must also have current medicals, fit test data and wear respirators during work. Respirator usage can be suspended if personal air sampling shows appropriate air concentrations complying with OSHA for asbestos containing materials.

E. This section specifies the procedures for removal of existing materials assumed to contain polychlorinated biphenyls (PCB), equal to or greater than (>)50 parts per million (ppm), in the form of interior/exterior window/wall systems caulking/glazing/sealant compounds, painted wood walls and roofing caulking compounds and disposal of removed materials as PCB Bulk Product Waste (EPA

Bulk Product Waste Reinterpretation dated October 24, 2012) (asbestos containing as well). The contractor must dispose of Remediation Waste (segregated adjacent materials and waste from abatement – suits, polyethylene sheeting, towels/rags, respirator cartridges, etc.) in addition to the Bulk Product Waste.

F. Disturbance or removal of assumed PCB containing materials may cause a health hazard to workers and adjacent occupants. The Abatement Contractor shall disclose to all of his workers, supervisory personnel, subcontractors and consultants who will be at job site of the seriousness of the hazard and of proper work procedures which must be followed.

G. When working in the immediate vicinity of assumed PCB containing materials, appropriate, the contractor shall take measures as necessary to protect all workers from the hazard of possible PCB exposure.

H. The Abatement Contractor shall employ a Competent Person (Supervisor) with at least three (3) years' experience on projects of similar scope and magnitude who shall be responsible for all work involving PCB abatement as described in the specifications and defined in applicable regulations, and have full time daily supervision of the same. The Supervisor shall be the Competent Person as defined by OSHA regulations and have experience in the proper removal and disposal of assumed PCB-Containing Materials.

I. The Abatement Contractor shall allow the work of this contract to be inspected, if required, by local, state, federal, and any other authorities having jurisdiction over such work. The Abatement Contractor shall immediately notify the Owner and Consultant and shall maintain written evidence of such inspection for review by the Owner and Consultant.

J. The Abatement Contractor shall incur the cost of all fines resulting from regulatory non-compliance as issued by federal, state, and local agencies. The Abatement Contractor shall incur the cost of all work requirements mandated by federal, state, and local agencies as a result of regulatory non-compliance or negligence. If the contractors actions result in the contamination of the site, the Abatement Contractor shall incur all costs associated with decontaminating the school property and adjacent properties, including but not limited to all possible litigation costs of the owners, consultants and other involved parties.

K. The Abatement Contractor shall immediately notify the Owner and Consultant of the delivery of all permits, licenses, certificates of inspection, of approval, or occupancy, etc., and any other such instruments required under codes by authorities having jurisdiction, regardless of who issued, and shall cause them to be displayed to the Owner and Consultant for verification and recording.

L. The Abatement Contractor shall provide enough labor to guarantee completion of the work within the time frame given and within the normal operating hours of the buildings.

M. The abatement contractor, their subcontractors, waste transporters and/or landfill(s) that work on the project do not have permission to take/analyze building materials for

PCB content/ concentrations without written permission from the building owner prior to such sampling. Should the contractor or other parties listed above take/analyze PCB samples without the owner's permission and PCBs are found to be >1 ppm, the hazardous materials/abatement contractor will be responsible for **all costs** associated with the abatement/ abatement/replacement of all the interior/exterior building materials and adjacent surfaces, including soil/asphalt/concrete/etc. as well as all costs associated with project delays, attorney fees for all parties affected and all costs resulting from CT DEEP/EPA requirements that may occur as a result.

1.08 SCOPE OF WORK

A. Proper and legal removal and disposal of all interior/exterior window/wall systems caulking/glazing/sealant compounds (including glass, panels, wood, metal, support systems, grout, etc), painted wood walls and roof caulking compound materials as assumed PCB Bulk Product Waste (over 50 ppm PCB and asbestos containing) from the UCONN Avery Point Campus Academic Building Site at 1084 Shennecossett Road in Groton, Connecticut. The contractor should assume painted wood waste will contain lead-based paint and pricing should include disposal as lead hazardous waste unless TCLP sampling proves otherwise and then a credit will be issued to the owner for disposal as non-lead-hazardous containing waste. Remove all sealant/caulking compounds and paint (sandblasting or equivalent approved method) from metal lintels and other metal surfaces to remain or to be removed and recycled/disposed of (must pass US EPA visual inspection protocol) if these metal surfaces are to be disturbed by the scope of work and/or other trades and dispose of as Remediation Waste.

B. The abatement activities shall comply with all aspects of the contract documents and Federal, State and local requirements.

C. The Abatement Contractor is responsible for verification of all quantities and/or materials scheduled for removal. The materials/quantities listed are estimates and no extra will be accepted. Locations of work are detailed on the HBM-01 drawing.

The scope of work is summarized as the following:

1. Assumed PCB Sealant Summary

The following materials are assumed to contain PCBs above the EPA threshold of >50 ppm PCB source material:

a. Exterior/Interior window/wall systems caulking/glazing/sealant compounds (including glass, panels, wood, metal, support systems, grout, etc), painted wood walls and roof caulking compound materials:

(1) Window/Wall System along lecture hall roof adjacent mechanical systems on metal beams (entire wall on this side)

(2) Stairwell Window/Wall Systems

(3) Roof caulking compounds on pitched roof to be partially removed, main flat roof areas and stairwell roof.

D. Site preparation and controls to facilitate abatement of assumed PCBs. Containment procedures referenced for the abatement zone must be utilized for assumed PCB Bulk Product Waste removal.

E. Health and Safety in accordance with Occupation Safety and Health Administration (OSHA) requirements.

F. All removal will occur with protection of the interior and exterior areas to avoid possible contamination including critical barriers over window openings and duct intakes. Plywood and several layers of reinforced polyethylene sheeting will be required on the exterior of the building, especially on all vertical/horizontal /roof/ground surfaces. Negative pressure containments (including polyethylene ceilings) will be required if abatement is to occur in the interior of the building. The following will also occur:

1. Cleaning of each work area following complete removal of assumed PCB containing materials.

2. A final visual shall be performed post abatement to verify removal of caulking and glazing compounds.

3. Recordkeeping and distribution as required in accordance with 40 CFR part 761.125 (c)(5).

1.09 REFERENCES

A. The publications listed below form a part of this specification to the extent referenced. The publications are referred to in the text by basic designation only. Where a conflict or overlap among regulations and/or these specifications exist, the most stringent requirements shall apply.

1. American National Standards Institute (ANSI)

a. ANSI.Z89.1 Personnel Protective Equipment - Protective Headwear for Industrial Worker's Requirements (Latest Revision)

b. ANSI.Z87

2. Code of Federal Regulations (CFR)

a. 29 CFR Subpart D- Walking, Working Surfaces

b. 29 CFR 1910.120 - Hazardous Waste Operations and Emergency Response (HAZWOPER).

c. 29 CFR 1910.134 - Respiratory Protection Standard

d. 29 CFR 191 0.146 - Permit-Required Confined Spaces

e. 29 CFR 1910.1000 — Air Contaminants (Table Z-1)

f. 29 CFR 1910.1200 - Hazard Communication

g. 29 CFR 1926.20 - General Health and Safety Provisions

h. 29 CFR 1926.57 – Ventilation

i. 29 CFR 1926.59 - Hazard Communication Program

j. 29 CFR 1926.62 - Lead Exposure in Construction

k. 29 CFR 1926.95 - Criteria for Personal Protective Equipment

l. 29 CFR 1926, Subpart H - Materials Handling, Storage, Use and Disposal

m. 29 CFR 1926, Subpart L - Scaffolding

n. 29 CFR 1926, Subpart M -Fall Protection

o. 29 CFR 1926, Subpart X – Ladders

p. 29 CFR 1926, Subpart Z - Toxic and Hazardous Substances

q. 40 CFR 50.6 - National Primary and Secondary Ambient Air Quality Standards for Particulate Matter

r. 40 CFR 260 - Hazardous Waste Management System: General

s. 40 CFR 261 - Identification and Listing of Hazardous Waste

t. 40 CFR 262 - Standards Applicable to Generators of Hazardous Waste

u. 40 CFR 263 - Standards Applicable to Transporters of Hazardous Waste

v. 40 CFR 264 - Standards for Owners and Operators of Hazardous Waste Treatment, Storage, and Disposal Facilities

w. 40 CFR 265 - Interim Status Standards for Owners and Operators of Hazardous Waste Treatment, Storage, and Disposal Facilities

x. 40 CFR 268 - Land Disposal Restrictions

y. 40 CFR 700 - Toxic Substances Control Act (TSCA)

z. 40 CFR 761 - PCBs Manufacturing, Processing, Distribution in Commerce, and Use Prohibitions

aa. 40 CFR Part 761.50 - Applicability (b) (1-8)

bb. 40 CFR Part 761.61 - PCB Remediation Waste

cc. 40 CFR Part 761.62 - PCB Bulk Product Waste

dd. 40 CFR Part 761.79 – Decontamination

ee. 49 CFR 105 - Hazardous Materials Program Definitions and General Procedures

ff. 49 CFR 171 - General Information, Regulations and Definitions

gg. 49 CFR 172 - Hazardous Material Table, Special Provisions, Hazardous Materials Communications, Emergency Response Information, and Training Requirements

hh. 49 CFR 173 - Shippers-General Requirements for Shipments and Packaging

ii. 49 CFR 177 - Carriage by Public Highway

jj. 49 CFR 176 - Specifications for Packaging

3. National Institute for Occupational Safety and Health (NIOSH)

a. Publication Number 87-106 Respiratory Decision Logic

b. NIOSH /OSHA Booklet 3142 Lead in Construction

c. Occupational Safety and Health Guidance Manual for Hazardous Waste Site Activities (NIOSH Publication 85-115)

4. Center for Disease Control (CDC): Air Pollution and Respiratory Health.

1.10 DEFINITIONS

A. The following definitions as used within this technical specification as well as references to specific sections of the Code of Federal Regulation section 40 CFR Part 761 are provided. Definitions are extracted in part from 40 CFR Part 761.3, for full definitions refer to the specified section of regulations.

1. CERCLA means the Comprehensive Environmental Response, Compensation, and Liability Act (42 U.S.C. 9601-9657).

2. Chemical waste landfill means a landfill at which protection against risk of injury to health or the environment from migration of PCBs to land, water, or the atmosphere is provided from PCBs and PCB Items deposited therein by locating, engineering, and operating the landfill as specified in §761.75.

3. Cleanup Site means the areal extent of contamination and all suitable areas in very close proximity to the contamination necessary for implementation of

a cleanup of PCB abatement waste, regardless of whether the site was intended for management of waste.

4. Containment means the enclosure within the building which establishes a contaminated area and surrounds the location where PCB and/or other toxic or hazardous substance removal is taking place and establishes a Control Work Area.

5. Designated Facility means the off-site disposer or commercial storer of PCB waste designated on the manifest as the facility that will receive a manifested shipment of PCB waste.

6. Disposal means intentionally or accidentally to discard, throw away, or otherwise complete or terminate the useful life of PCBs and PCB Items. Disposal includes spills, leaks, and other uncontrolled discharges of PCBs as well as actions related to containing, transporting, destroying, degrading, decontaminating, or confining PCBs and PCB Items.

7. DOT means the United States Department of Transportation.

8. EPA identification number means the 12-digit number assigned to a facility by EPA upon notification of PCB waste activity under §761.205.

9. Excluded PCB products means PCB materials which appear at concentrations less than 50 ppm as defined in 40 CFR §761.3.

10. Fixed Object means mechanical equipment, electrical equipment, fire detection systems, alarms, and all other fixed equipment, fixtures or other items which cannot be removed from the work area.

11. Generator of PCB waste means any person whose act or process produces PCBs that are regulated for disposal under subpart D of 40 CFR Part 761, or whose act first causes PCBs or PCB Items to become subject to the disposal requirements of subpart D, or who has physical control over the PCBs when a decision is made that the use of the PCBs has been terminated and therefore is subject to the disposal requirements of subpart D. Unless another provision of 40 CFR Part 761 specifically requires a site-specific meaning, "generator of PCB waste" includes all of the sites of PCB waste generation owned or operated by the person who generates PCB waste.

12. HEPA means High Efficiency Particulate Air filtration efficiency of 99.97 percent down to 0.3 microns. Filtration provided on specialized vacuums and air filtration devices to trap particles.

13. High occupancy area means any area where PCB abatement waste has been disposed of on-site and where occupancy for any individual not wearing dermal and respiratory protection for a calendar year is: 840 hours or more (an average of 16.8 hours or more per week) for non-porous surfaces and 335 hours or more (an average of 6.7 hours or more per week) for bulk PCB abatement waste. Examples could include a residence, school, day care center, sleeping quarters, a single or multiple occupancy 40 hours per week

work station, a school class room, a cafeteria in an industrial facility, a control room, and a work station at an assembly line.

14. Incinerator means an engineered device using controlled flame combustion to thermally degrade PCBs and PCB Items. Examples of devices used for incineration include rotary kilns, liquid injection incinerators, cement kilns, and high temperature boilers.

15. Laboratory means a facility that analyzes samples for PCBs and is unaffiliated with any entity whose activities involve PCBs.

16. Liquid PCBs means a homogenous flowable material containing PCBs and no more than 0.5 percent by weight non-dissolved material.

17. Low occupancy area means any area where PCB abatement waste has been disposed of on-site and where occupancy for any individual not wearing dermal and respiratory protection for a calendar year is: less than 840 hours (an average of 16.8 hours per week) for non-porous surfaces and less than 335 hours (an average of 6.7 hours per week) for bulk PCB abatement waste. Examples could include an electrical substation or a location in an industrial facility where a worker spends small amounts of time per week (such as an unoccupied area outside a building, an electrical equipment vault, or in the non-office space in a warehouse where occupancy is transitory).

18. Manifest means the shipping document EPA form 8700-22 and any continuation sheet attached to EPA form 8700-22, originated and signed by the generator of PCB waste in accordance with the instructions included with the form and subpart K of this part.

19. Mark means the descriptive name, instructions, cautions, or other information applied to PCBs and PCB Items, or other objects subject to these regulations.

20. Marked means the marking of PCB Items and PCB storage areas and transport vehicles by means of applying a legible mark by painting, fixation of an adhesive label, or by any other method that meets the requirements of these regulations.

21. Municipal solid wastes means garbage, refuse, sludges, wastes, and other discarded materials resulting from residential and non-industrial operations and activities, such as household activities, office functions, and commercial housekeeping wastes.

22. Non-liquid PCBs means materials containing PCBs that by visual inspection do not flow at room temperature (25°C or 77°F) or from which no liquid passes when a 100 g or 100 ml representative sample is placed in a mesh number 60 ±5 percent paint filter and allowed to drain at room temperature for 5 minutes.

23. Non-porous surface means a smooth, unpainted solid surface that limits penetration of liquid containing PCBs beyond the immediate surface. Examples are: smooth un-corroded metal; natural gas pipe with a thin porous

coating originally applied to inhibit corrosion; smooth glass; smooth glazed ceramics; impermeable polished building stone such as marble or granite; and high density plastics, such as polycarbonates and melamines, that do not absorb organic solvents.

24. On site means within the boundaries of a contiguous property unit.

25. PCB and PCBs means any chemical substance that is limited to the biphenyl molecule that has been chlorinated to varying degrees or any combination of substances which contains such substance. Refer to §761.1(b) for applicable concentrations of PCBs. PCB and PCBs as contained in PCB items are defined in §761.3. For any purposes under this part, inadvertently generated non-Aroclor PCBs are defined as the total PCBs calculated following division of the quantity of mono-chlorinated biphenyls by 50 and di-chlorinated biphenyls by 5.

26. PCB Article means any manufactured article, other than a PCB Container, that contains PCBs and whose surface(s) has been in direct contact with PCBs. "PCB Article" includes capacitors, transformers, electric motors, pumps, pipes and any other manufactured item (1) which is formed to a specific shape or design during manufacture, (2) which has end use function(s) dependent in whole or in part upon its shape or design during end use, and (3) which has either no change of chemical composition during its end use or only those changes of composition which have no commercial purpose separate from that of the PCB Article.

27. PCB Article Container means any package, can, bottle, bag, barrel, drum, tank, or other device used to contain PCB Articles or PCB Equipment, and whose surface(s) has not been in direct contact with PCBs.

28. PCB Bulk Product Waste means waste derived from manufactured products containing PCBs in a non-liquid state, at any concentration where the concentration at the time of designation for disposal is >50 ppm PCBs. PCB bulk product waste does not include PCBs or PCB Items regulated for disposal under §761.60(a) through (c), §761.61, §761.63, or §761.64. PCB bulk product waste is further defined in 40 CFR §761.3. Note in accordance with October 2012 re-interpretation from the U.S. Environmental Protection Agency (EPA), adjacent porous materials in contact with PCB Bulk Products shall be considered PCB Bulk Product Material for disposal purposes.

29. PCB Capacitor means any capacitor that contains >500 ppm PCB. Concentration assumptions applicable to capacitors appear under §761.2.

30. PCB Container means any package, can, bottle, bag, barrel, drum, tank, or other device that contains PCBs or PCB Articles and whose surface(s) has been in direct contact with PCBs.

31. PCB-Contaminated means a non-liquid material containing PCBs at concentrations >50 ppm but < 500 ppm; a liquid material containing PCBs at concentrations >50 ppm but < 500 ppm or where insufficient liquid material is

available for analysis, a non-porous surface having a surface concentration >10 pg/100 cm2 but < 100 pg/100 cm2 , measured by a standard wipe test as defined in §761.123.

32. PCB Equipment means any manufactured item, other than a PCB Container or a PCB Article Container, which contains a PCB Article or other PCB Equipment, and includes microwave ovens, electronic equipment, and fluorescent light ballasts and fixtures.

33. PCB Item means any PCB Article, PCB Article Container, PCB Container, PCB Equipment, or anything that deliberately or unintentionally contains or has as a part of it any PCB or PCBs.

34. PCB Abatement Waste means waste containing PCBs as a result of a spill, release, or other unauthorized disposal, at the following concentrations: Materials disposed of prior to April 18, 1978, that are currently at concentrations >50 ppm PCBs, regardless of the concentration of the original spill; materials which are currently at any volume or concentration where the original source was >500 ppm PCBs beginning on April 18, 1978, or >50 ppm PCBs beginning on July 2, 1979; and materials which are currently at any concentration if the PCBs are spilled or released from a source not authorized for use under this part. PCB abatement waste means soil, rags, and other debris generated as a result of any PCB spill cleanup, as further defined in 40 CFR §761.3.

35. PCB waste(s) means those PCBs and PCB Items that are subject to the disposal requirements of subpart D in 40 CFR Part 761.

36. Porous surface means any surface that allows PCBs to penetrate or pass into itself including, but not limited to, paint or coating on metal; corroded metal; fibrous glass or glass wool; unglazed ceramics; ceramics with a porous glaze; porous building stone such as sandstone, travertine, limestone, or coral rock; low-density plastics such as Styrofoam and low-density polyethylene; coated (varnished or painted) or uncoated wood; concrete or cement; plaster; plasterboard; wallboard; rubber; fiberboard; chipboard; asphalt; or tar paper. For purposes of cleaning and disposing of PCB abatement waste, porous surfaces have different requirements than nonporous surfaces.

37. RCRA means the Resource Conservation and Recovery Act (40 U.S.C. 6901 et seq.).

38. Standard wipe sample means a sample collected for chemical extraction and analysis using the standard wipe test as defined in §761.123. Except as designated elsewhere in part 761, the minimum surface area to be sampled shall be 100 cm2.

39. Storage for disposal means temporary storage of PCBs that have been designated for disposal.

40. SW-846 means the document having the title "SW-846, Test Methods for Evaluating Solid Waste,"

41. Totally enclosed manner means any manner that will ensure no exposure of human beings or the environment to any concentration of PCBs.

42. Transfer facility means any transportation-related facility including loading docks, parking areas, and other similar areas where shipments of PCB waste are held during the normal course of transportation. Transport vehicles are not transfer facilities under this definition, unless they are used for the storage of PCB waste, rather than for actual transport activities. Storage areas for PCB waste at transfer facilities are subject to the storage facility standards of §761.65, but such storage areas are exempt from the approval requirements of §761.65(d) and the recordkeeping requirements of §761.180, unless the same PCB waste is stored there for a period of more than 10 consecutive days between destinations.

43. Transporter of PCB waste means, for the purposes of subpart K of 40 CFR Part 761, any person engaged in the transportation of regulated PCB waste by air, rail, highway, or water for purposes other than consolidation by a generator.

44. Transport vehicle means a motor vehicle or rail car used for the transportation of cargo by any mode. Each cargo-carrying body (e.g., trailer, railroad freight car) is a separate transport vehicle.

45. TSCA means the Toxic Substances Control Act (15 U.S.C. 2601 et seq.).

1.11 SUBMITTALS

A. A pre-abatement meeting shall occur with the Abatement Contractor, Owner or the Owner's Authorized Representative, and environmental consultant two weeks prior to commencement of work. This meeting is separate from the meeting described in 1.15 C. The following documents shall be submitted immediately upon project award to the Owner prior to commencement of assumed PCB Removal work:

1. Site Specific Health and Safety Plan (HASP): The Abatement Contractor shall prepare a site specific HASP plan for protection of workers and control of the work site in accordance with OSHA regulatory requirements. The HASP shall govern all work conducted at the site during the abatement of assumed PCB materials and related debris; waste handling, sampling, waste management; and waste transportation. At a minimum, the HASP shall address the requirements set forth in 29 CFR 1910.120, as further outlined below:

a. Health and Safety Organization

b. Site Description and Hazard Assessment

c. Training

d. Medical Surveillance

e. Work Areas

f. Personal Protective Equipment

g. Personal Hygiene and Decontamination

h. Standard Operating Procedures and Engineering Controls

i. Emergency Equipment and First Aid Provisions

j. Equipment Decontamination

k. Air Monitoring

l. Telephone List

m. Emergency Response and Evacuation Procedures and Routes

n. Site Control

o. Permit-Required Confined Space Procedures

p. Spill prevention and Containment Plan

q. Heat and Cold Stress

r. Record Keeping

s. Community Protection Plan

2. Training Documentation: Documentation of OSHA 40-Hour HAZWOPER Training for all employees and subcontractors to be used for the abatement work, and 8-Hour HAZWOPER Supervisor Training for the designated on-site Health and Safety Officer for the abatement work.

3. PCB and/or other Toxic or Hazardous Substances Disposal Plan: A written plan that details the Abatement Contractor's plan for transportation and disposal of assumed PCB-containing or other Toxic or Hazardous Substance wastes generated during the project. The Disposal Plan shall identify:

   a. Waste packaging, labeling, placarding and manifesting procedures.

   b. The name, address and 24-hour contact number for the proposed treatment or disposal facility or facilities to which waste generated during the project will be transported.

   c. The name, address, contact person(s) and state-specific permit numbers for proposed waste transporters, and EPA identification number for firms that will transport waste.

d. The license plate numbers of vehicles to be used in transporting of the waste from the site to the disposal facility.

e. The route(s) by which the waste will be transported to the designated disposal facility, and states or territories through which the waste will pass.

4. Safely Data Sheets: Safety Data Sheets (OSHA Form 174 or equivalent) and manufacturer's information shall be provided for all chemicals and materials to be used during the project including but not limited to specialty cleaners and chemical stripping products.

B. The following documents shall be submitted to the Owner within fifteen (15) work days following removal of waste from the site:

1. Waste Profile Sheets

2. Pre-Disposal Analysis Test Results (If required by disposal facility)

3. Manifests signed by the disposal facility

4. Tipping Receipts provided by the disposal facility

5. Certification of Final Treatment/Disposal signed by the responsible disposal facility official.

C. Work Closeout Submittals:

1. Disposal Site Receipts: Copy of waste shipment record and disposal site receipt showing the assumed PCB-containing or other Toxic or Hazardous Substances materials have been properly disposed.

D. Product Data: Catalog sheets, specifications, and application instructions for any removal products, if used.

1.12 REGULATIONS AND STANDARDS

A. The Abatement Contractor shall be solely responsible for conducting this project and supervising all work in a manner that will be in conformance with all federal, state, and local regulations and guidelines pertaining to assumed PCB Containing Material removal. Specifically, The Abatement Contractor shall comply with the requirements of the following as applicable to the work to be performed:

1. Toxic Substance Control Act (TSCA) (40 CFR Part 761).

2. Comprehensive Environmental Response, Compensation, and Liability Act (Superfund Law).

3. Department of Transportation (DOT) regulations - DOT regulation HM-181 regulates transportation of hazardous materials, including PCBs.

4. Occupational Safety and Health Administration (OSHA) - OSHA regulates workers' safety and exposure to a variety of chemicals including PCBs.

5. Connecticut Basic Building Code (BOCA) (including Connecticut Supplements);

6. Life Safety Code (NFPA); and

7. Local health and safety codes, ordinances or regulations pertaining to hazardous materials abatement and all national codes and standards including ASTM, ANSI, and Underwriter's Laboratories.

1.13 FINAL VISUAL CLEARANCE

A. Following the completion of the work, the Consultant shall perform a final visual inspection of the work area per EPA and State of Connecticut CT DEEP regulations and guidance documents to confirm assumed PCB-containing materials were removed consistent with these specificatons.

1.14 POSTING AND RECORD MAINTENANCE REQUIREMENTS

A. The following items shall be conspicuously displayed proximate but outside of abatement work areas.

1. Exit Routes -Emergency exit procedures and routes

2. Emergency Phone Numbers - A list indicating the telephone numbers and locations of the local hospital(s); the local emergency squad; the local fire department; the local police department; the Poison Control Center; Chemical Emergency Advise (CHEMTREC); the local Department of Health's local office; the Abatement Contractor (on-site and after hours numbers); and the environmental consultant (on-site and after hours numbers).

3. Warning Signs - Warning signs shall be in English and the language of any workers onsite who do not speak English, and be of sufficient size to be clearly legible and display the following or similar language in accordance with 29 CFR 1910.1200:

WARNING
HAZARDOUS WASTE WORK AREA
PCBs-POISON
NO SMOKING, EATING OR DRINKING
AUTHORIZED PERSONNEL ONLY
PROTECTIVE CLOTHING IS REQUIRED IN THIS AREA

In addition, all entrances to work areas shall be posted with a PCB M_L marker.

B. The Abatement Contractor shall maintain the following items on-site and available for review by all employees and authorized visitors:

1. Abatement Contractor's Project Specific Health and Safety Plan

2. Certificates of Training for all employees and the project Supervisor

3. Codes, Standards and Publications

4. Safety Data Sheets (SDS) for all chemicals used during the project.

5. Copies of the Abatement Contractor's written hazard communication, respiratory protection, and confined space entry programs.

C. Fees, Permits and Licenses. The Abatement Contractor shall pay all licensing fees, royalties, and other costs necessary for the use of any copyrighted or patented product, design, invention, or processing in the performance of the work specified in this Section.

1. The Abatement Contractor shall be solely responsible for costs, damages, or losses resulting from any infringement of these patent rights or copyrights. The Abatement Contractor shall hold the Owner and the Owner's Authorized Representative harmless from any costs, damages, and losses resulting from any infringement of these patent rights or copyrights.

2. The Abatement Contractor shall be responsible for securing all necessary permits for work under this Section, including hauling, removal, and disposal, fire, and materials usage, or any other permits required to perform the specified work.

1.15 QUALITY ASSURANCE

A. The Abatement Contractor shall provide and assure that the quality of work practices and procedures to be utilized are consistent with the above listed agencies and regulations. Abatement Contractor shall utilize the latest edition, including all addenda, revisions and supplements for all regulatory agencies codes, etc.

B. Worker's Qualifications: The persons performing abatement and their supervisors shall be personally experienced in PCB abatement work and shall have been regularly employed by a company performing PCB abatement for a minimum of 3 years.

C. Pre-Work Conference: Before the Work of this Section is scheduled to commence, a conference will be held by the Owner at the Site for the purpose of reviewing the Contract Documents, discussing requirements for the Work, and reviewing the Work procedures.

1. The conference shall be attended by the Abatement Contractor, and the Owner's Authorized Representative employed by the Owner. This pre-abatement meeting(s) may consist of multiple meetings.

1.16 MINIMUM REQUIREMENTS FOR WORKER HEALTH AND SAFETY

A. The Abatement Contractor is responsible and liable for the health and safety of all onsite personnel, occupants of adjacent properties and the offsite community affected by the project. All onsite workers or other persons entering the abatement work areas, decontamination areas or waste handling and staging areas shall be knowledgeable of and comply with the requirements of the site specific Health and Safety Plan at all times. The Abatement Contractor's HASP shall comply with all applicable federal, state, and local regulations protecting human health and the environment from the hazards posed by the work to be performed under this project.

B. Consistent disregard for the provisions of the HASP shall be deemed as sufficient cause for immediate stoppage of work and termination of the Contract or any Sub Contracts without compromise or prejudice to the rights of the Owner or the Owner's Authorized Representative.

C. Any discrepancies between the Abatement Contractor's HASP and these specifications or federal and state regulations shall be resolved in favor of the more stringent requirements that provide the highest degree of protection to the project personnel and the surrounding community and environment

D. In addition to exposure concerns relating to the potential presence of PCB's, other health and safety considerations will apply to the work. The Abatement Contractor shall be responsible for recognizing such hazards and shall be responsible for the health and safety of Abatement Contractor employees at all times. It is the Abatement Contractor's responsibility to comply with all applicable health and safety regulations.

E. The HASP shall be reviewed by all persons prior to entry into the abatement, decontamination, or waste staging areas, whether a representative of the Abatement Contractor, owner, architect/engineer, environmental consultant, subcontractor(s), waste transporter or federal, state or local regulatory agency. Such review shall be acknowledged and documented by the Abatement Contractor's Health and Safety Officer by obtaining the name, signature and affiliation of all persons reviewing the HASP.

F. The HASP shall be maintained so as to be readily accessible and reviewable by all site personnel throughout the duration of the abatement project and until all waste materials are removed from the site and disposed of at the appropriate disposal facility.

G. The Abatement Contractor's on-site Health and Safety Officer shall be responsible for ensuring that project personnel and site visitors are informed of and comply with the provisions of the HASP at all times during the project.

1.17 WORK AREAS AND ZONES

A. The Abatement Contractor shall lay-out and clearly identify work areas in the field. Access by equipment, site personnel, and the public to the work areas shall be limited as follows:

1. Abatement Zone: The Abatement Zone(s) shall consist of all interior and exterior areas where removal of assumed PCBs and other Toxic or Hazardous Substances and waste handling and staging activities are on-going and the immediately surrounding locale or other areas where contamination could occur. The Abatement Zone for purposes of interior and exterior removal of PCB materials or other Toxic or Hazardous Substances for disposal shall be performed within a containment to isolate work areas from non-work areas. The containment shall be visibly delineated with appropriate warning signs at all approaches to Abatement (including a PCB M_L marker), and be restricted from access by all persons except those directly necessary for the completion of the respective abatement tasks. The Abatement Zone shall be located and delineated as necessary to limit access to the abatement area and to minimize risk of exposure to site workers and the general public. Access shall be controlled at the periphery of the Abatement Zone to regulate the flow of personnel and equipment into and out of the zone and to help verify that proper procedures for entering and exiting are followed. All persons within the Abatement Zone shall wear the appropriate level of protection established in the HASP.

2. Decontamination Zone: The Decontamination Zone is the transition zone between the abatement area and the clean support zone of the project site, and is intended to reduce the potential for contaminants from being dispersed from the Abatement Zone to clean areas of the site. The Decontamination Zone shall consist of a buffer area surrounding the Abatement Zone through which the transfer of equipment, materials, personnel and containerized waste products will occur and in which decontamination of equipment, personnel, and clothing will occur. The Decontamination Zones shall be constructed as a three chamber decontamination unit for workers and a two chamber equipment room for waste load out as detailed in Section 3.4. All emergency response and first aid equipment shall be readily maintained in this Zone. All protective equipment and clothing shall be removed or decontaminated in the Decontamination Zone prior to exiting to the Support Zone.

3. Support Zone: The Support Zone will consist of the area outside the Decontamination Zone and the remainder of the project site. Administrative and other support functions and any activities that by nature need not be conducted in the Abatement or Decontamination Zone related to the project shall occur in the Support Zone, Access to the Abatement and Decontamination Zones shall be controlled by the Health and Safety Officer and limited to those persons necessary to complete the abatement work and which have reviewed and signed the HASP.

1.18 PERSONNEL PROTECTIVE EQUIPMENT

A. The Abatement Contractor shall be responsible to determine and provide the appropriate level of personal protective equipment in accordance with applicable regulations and standards necessary to protect the Abatement Contractor's employees from all hazards present.

B. The Abatement Contractor shall provide all employees with the appropriate safety equipment and protective clothing to ensure an appropriate level of protection for each task, taking into consideration the chemical, physical, ergonomic and biological hazards posed by the site and work activities.

C. The Abatement Contractor shall establish in the HASP criteria for the selection and use of personal protective equipment (PPE).

D. The PPE to be utilized for the project shall be selected based upon the potential hazards associated with the project site and the work to be performed. Appropriate protective clothing shall be worn at all times within the Abatement Zone.

E. The Abatement Contractor shall provide the appropriate level of respiratory protection to all field personnel engaged in activities where respiratory hazards exist or there is a potential for such hazard to exit.

F. The Abatement Contractor shall provide, as necessary, protective coveralls, disposable gloves and other protective clothing for all personnel that will be actively involved in abatement activities or waste handling activities or otherwise present in the Abatement Zones. Coveralls shall be of Tyvek or equivalent material. Should the potential for exposure to liquids exist, splash resistant disposable suits shall be provided and utilized.

G. Protective coveralls, and other protective clothing shall be donned and removed within the Decontamination Zone and shall be disposed of at the end of each day. Ripped coveralls shall be immediately replaced after appropriate decontamination has been completed to the satisfaction of the Health and Safety Officer. Protective clothing shall not be worn outside of the Decontamination Zone.

H. Hard Hats, protective eyewear, rubber boots and or other non-skid footwear shall be provided by the Abatement Contractor as required for workers and authorized visitors.

I. All contaminated protective clothing, respirator cartridges and disposable protective items shall be placed into proper containers to be provided by the Abatement Contractor for transport and proper disposal in accordance with 40 CFR 262.

1.19 EMERGENCY EQUIPMENT AND FIRST AID REQUIREMENTS

A. The Abatement Contractor shall provide and maintain at the site, at a minimum, the following Emergency and First Aid Equipment:

1. Fire Extinguishers: A minimum one (1) fire extinguisher shall be supplied and maintained at the site by the Abatement Contractor throughout the duration of the project. Each extinguisher shall be a minimum of a 20 pound Class ABC dry fire extinguisher with Underwriters Laboratory approval per 29 CFR 1910.157.

2. First Aid Kit: A minimum of one (1) first aid kit meeting the requirements of 29 CFR 1910,151 shall be supplied and maintained at the site by the Abatement Contractor throughout the duration of the project.

3. Communications: Telephone communications (either cellular or land line) shall be provided by the Abatement Contractor for use by site personnel at all times during the project.

B. The Health and Safely Officer shall be notified immediately in the event of personal injury, potential exposure to contaminants, or other emergency. The Health and Safety Officer shall then immediately notify the Owner's Authorized Representative.

1.20 STANDARD SAFETY AND HEALTH PROCEDURES AND ENGINEERING CONTROLS

A. The following provisions shall be employed to promote overall safety, personnel hygiene and personnel decontamination:

1. Each Abatement Contractor or Subcontractor shall ensure that all safety equipment and protective clothing to be utilized by its personnel is maintained in a clean and readily accessible manner at the site.

2. All prescription eyeglasses in use on this project shall be safety glasses conforming to ANSI Standard Z87.1. No contact lenses shall be allowed on the site.

3. Prior to exiting the delineated Decontamination Zone(s), all personnel shall remove protective clothing, and place disposable items in appropriate disposal containers to be dedicated to that purpose. Following removal of PPE, personnel shall thoroughly wash and rinse their face, hands, arms and other exposed areas with soap and tap water wash and subsequent tap water rinse. A fresh supply of tap water shall be provided at the site on each work day by the Abatement Contractor for this purpose.

4. All PPE used on site shall be decontaminated or disposed of at the end of each work day. Discarded PPE shall be placed in sealed DOT approved 55-gallon barrels for off-site disposal.

5. Respirators, if necessary due to an upgrade to Level C PPE, shall be dedicated to each employee, and not interchanged between workers without cleaning and sanitizing.

6. Eating, drinking, chewing gum or tobacco, smoking, and any other practice that increases the likelihood of hand to mouth contact shall be prohibited within the delineated abatement and decontamination work zones. Prior to performing these activities, each employee shall thoroughly cleanse their face, hands, arms and other exposed areas.

7. All personnel shall thoroughly cleanse their face hands, arms and other exposed areas prior to using toilet facilities.

8. No alcohol, tobacco, illicit drugs or firearms will be allowed on the site at any time.

9. Contact with potentially contaminated surfaces should be avoided, if possible. Field personnel should minimize walking through standing water/puddles, mud or other wet or discolored surfaces; kneeling on ground; and placing equipment, materials or food on ground or other potentially contaminated surface.

10. The use of the "Buddy System" shall be employed at all times while conducting work at the site. Each employee shall frequently monitor other workers for signs of heat stress or chemical exposure or fatigue: periodically examine others PPE for signs of wear or damage; routinely communicate with others; and notify the Health and Safety Officer in the case of an emergency.

B. Workers must wear protective suits, protective gloves, eye protection and a minimum of half-face respirator with HEPA filter cartridge for all projects. Respiratory protection shall be in accordance with OSHA regulation 1910.134 and ANSI Z88.2.

C. Workers must be trained as per OSHA and US EPA requirements, have medical clearance and must have recently received pulmonary function test (PFT) and respirator fit tested by a trained professional.

1. A personal air sampling program shall be in place as required by OSHA.

2. The use of respirators must also follow a complete respiratory protection program as specified by OSHA.

1.21 INDEPENDENT INSPECTION AND MONITORING

A. This section describes independent visual inspection and monitoring work being performed on behalf of the Owner. This work is not in the Contract Sum. This section describes monitoring carried out by the Owner's Consultant (Langan) to verify that the building beyond the work area and the outside environment remains uncontaminated.

B. The purpose of the Owner's Consultant's monitoring is to detect faults in the work area isolation such as:

1. Contamination of the building outside of the work area by assumed PCB dust.

2. Failure of filtration or rupture in the differential pressure system as applicable.

3. Contamination of ground surface/roofing/building outside of the containment/work area(s).

C. Should any of the above occur, the Abatement Contractor shall immediately cease removal activities until the fault is corrected. Do not recommence work until authorized by the Owner's Consultant.

D. The Owner's Consultant may monitor the Work Area. The purpose of this monitoring will be to detect dust outside containment, which may challenge the ability of the Work Area isolation procedures to protect the balance of the building or outside of the building from contamination.

E. The Owner's Consultant will perform on-site monitoring throughout the course of the project, as follows:

1. All work procedures shall be continuously monitored by the Consultant to assure that areas outside the designated work locations in the buildings will not be contaminated.

2. Prior to work on any given day, The Abatement Contractor's designated "competent person" shall discuss the day's work schedule with the Consultant to evaluate job tasks with respect to safety procedures and requirements specified to prevent contamination of the building or the employees. This includes a visual survey of the work area and the decontamination of the building or the employees.

PART 2 - PRODUCTS

2.01 ABATEMENT PRODUCTS

A. Deliver all materials in the original packages, containers, or bundles bearing the name of the manufacturer and the brand name and product technical description.

B. Damaged or deteriorating materials shall not be used and shall be removed from the premises. Material that becomes contaminated with assumed PCBs shall be decontaminated or disposed of as PCB waste.

C. Polyethylene sheet in a roll size to minimize the frequency of joints shall be delivered to the job site with factory label indicating:

1. Type: Minimum 6 mil., opaque, fire retardant polyethylene sheets.

2. Floor/Ground Protective Layer: Minimum of multiple layers of 10 mil., reinforced polyethylene sheets (minimum of 20 feet out/away from building footprint).

D. Respirators:

1. Type: Approved by the Mine Safety and Health Administration (MSHA), Department of Labor, or the National Institute for Occupational Safety and Health (NIOSH), Department of Health and Human Services.

E. Polyethylene disposable bags shall be six (6) mil with pertinent pre-printed label. Tie wraps for bags shall be plastic, five (5) inches long (minimum), pointed and looped to secure filled plastic bags.

F. Tape or adhesive spray will be capable of sealing joints in adjacent polyethylene sheets and for attachment of polyethylene sheet to finished or unfinished surfaces of dissimilar materials and capable of adhering under both dry and wet conditions, including use of amended water.

G. Cleaning Products: Contractor shall at their discretion utilize specialty cleaning products such as Capsur, TechXtract or other cleaners for use in decontaminating porous and nonporous surfaces to remain. All such products shall be utilized in accordance with manufacturer's specifications as intended. Abatement Contractor shall ensure appropriate use and disposal associated with use in accordance with the SDS sheets for each product utilized.

H. The Abatement Contractor shall have available spray equipment capable of mixing wetting agent with water and capable of generating sufficient pressure and volume and having sufficient hose length to reach all areas with assumed PCBs.

I. HEPA filtered local exhaust ventilation shall be utilized during the installation of enclosures and supports where assumed PCB-containing materials may be disturbed.

2.02 TOOLS AND EQUIPMENT

A. The Abatement Contractor shall provide a sufficient supply of disposable mops, rags, and sponges for work area cleaning and decontamination shall be available.

B. The Abatement Contractor shall provide a sufficient supply of scaffolding, ladders, lifts, and hand tools (e.g., scrapers, wire cutters, brushes, utility knives, wire saws, etc.) shall be provided as needed.

C. The Abatement Contractor shall provide all tools and equipment necessary for PCB removal.

D. The Abatement Contractor's air monitoring professional shall have air-monitoring equipment of type and quantity to monitor operations and conduct personnel exposure surveillance per OSHA requirements.

E. The Abatement Contractor shall have available sufficient inventory or dated purchase orders for materials necessary for the job including protective clothing, respirators, filter cartridges, polyethylene sheeting of proper size and thickness, tape and air filters.

F. The Abatement Contractor shall provide (as needed) temporary electrical power panels, electrical power cables, and electrical power sources (such as generators). Any electrical connection work affecting the building electrical power system shall be performed by a State of Connecticut licensed electrician.

G. The Abatement Contractor shall have available shower stalls and plumbing to support same to include sufficient hose length and drain system or an acceptable alternate and supply temporary water/connections as needed.

H. Exhaust air filtration system units shall contain HEPA filter(s) capable of sufficient air exhaust to create negative pressure of -0.02 inches of water within enclosure with respect to outside area. Equipment shall be checked for proper operation by smoke tubes or differential pressure gauge before the start of each shift and at least twice during the shift. Adequate exhaust air shall be provided for a minimum of four (4) air changes per hour within the enclosure. No air movement system or air filtering equipment shall discharge unfiltered air outside.

I. Vacuum units, of suitable size and capacities for the project, shall have HEPA filter(s) capable of trapping and retaining at least 99.97 percent of all mono-dispersed particles of 0.3 micrometers in diameter or larger.

2.03 PERSONNEL PROTECTION

A. Safety equipment (e.g., hard hats meeting the requirements of ANSI Standard 289.1-1981, eye protection meeting the requirements of ANSI Standard Z87.1-1979, safety shoes meeting the requirements of ANSI Standard Z41.1-1967, disposable PVC gloves or other work gloves), shall be provided to all workers and authorized visitors.

B. Non-skid footwear shall be provided to all abatement workers. Disposable clothing shall be adequately sealed to the footwear to prevent body contamination.

PART 3 - EXECUTION

3.01 WORK AREA PROTECTION — ABATEMENT ZONE GENERAL

A. Protection of Existing Construction: Perform assumed PCB Bulk Product Waste removal work without damage or contamination of adjacent areas, roofs, asphalt and/or concrete paving, soils, and existing construction.

B. Prior to commencement of interior abatement activities at each work area, a containment system shall be constructed by the Abatement Contractor to capture and contain all materials removed during the abatement. Containment procedures referenced for the abatement zone must be utilized for assumed PCB Bulk Product Waste removal. All removal will occur with protection of the interior and exterior areas to avoid possible contamination, including critical barriers over window openings and duct intakes.

C. During all abatement activities, Abatement Contractor shall maintain control of all entrances and exits to the work areas to ensure only authorized personnel enter the work areas and are afforded proper personal protective equipment and as required respiratory protection. All approaches to work areas shall be demarcated with appropriately worded warning signs.

D. Work zones shall be established in accordance with this section to include abatement zone, decontamination zone, and support zone.

3.02 WORK AREA PROTECTION — ABATEMENT ZONE FOR PCB BULK PRODUCT

A. Ground protection to prevent debris from escaping the abatement zone and to protect areas outside of abatement zone from contamination shall be utilized. Protection shall include the use of water impervious membrane covering which shall be secured to the ground surface. Edges shall be raised to prevent water run-off used for dust control during cutting and demolition of structures. The membrane shall be covered with multiple layers of 10-mil reinforced polyethylene sheeting securely fastened to foundation (minimum of 20 feet out/away from vertical walls). Plywood shall be put on the horizontal surfaces (roof/ground) before the polyethylene sheeting is installed. Two layers of 6-mil polyethylene sheeting shall be installed on the interior of the exterior walls throughout the work areas unless the contractor is using negative pressure containments in 3.2D.

B. Ground protection and isolation barriers shall remain in place throughout work to collect dust and debris resulting from assumed PCB Bulk Product Waste removal. No water run-off is allowed.

C. All openings such as unit ventilation, ducts, grilles, lights, doorways, and windows shall be securely sealed with a single layer of 6-mil polyethylene sheeting. Horizontal surface protection to prevent debris from escaping the abatement zone and to protect areas outside of abatement zone from contamination shall be utilized.

D. Negative pressure containments shall be constructed consisting of two layers of 6-mil polyethylene sheeting on wall and ceiling surfaces and two or more layers of reinforced polyethylene sheeting on floor surfaces if abatement is occurring on the interior. Containments shall remain in place throughout work to collect dust and debris resulting from removal.

E. All debris generated during operations shall be HEPA vacuumed continuously throughout the work shift and at the end of a work shift to avoid accumulation. Any tears or rips that occur in protections shall be repaired or removed and replaced with new protections.

F. All surfaces adjacent to materials removed shall be properly decontaminated upon completing the removal of assumed PCB Bulk Product Waste.

G. Warning Signage: Post warning signs in accordance with 29 CFR 1910.1200 at all approaches to the work area. Signs shall be conspicuously posted to permit a person to read signs and take precautionary measures to avoid exposure to assumed PCBs or other Toxic or Hazardous Substances. These signs should include the PCB ML markers at each entrance to the work area.

H. Waste Containers for PCB Bulk Product Waste: Appropriate PCB waste containers shall be placed adjacent to abatement zones. Containers shall be lined covered and secured. The PCB waste containers shall be properly marked as described in 40 CFR part §761.40. Marking shall include a PCB M_L marker formatted in accordance with 40 CFR part §761.45.

3.03 DECONTAMINATION ZONE

A. The Abatement Contractor shall establish contiguous to the work area, a decontamination enclosure consisting of equipment room, shower room, and clean room in series. The only access between contaminated and uncontaminated areas shall be through this decontamination enclosure. The Abatement Contractor shall ensure that employees enter and exit the Abatement Zone through the decontamination area.

B. Access between rooms in the decontamination system shall be through double flap curtain opening airlocks. The clean room, shower and equipment room within the decontamination enclosure, shall be completely sealed ensuring that the sole source of airflow through this area originates from uncontaminated areas outside the work area.

C. Construct the decontamination systems with wood or metal framing, 3/8" sheathing and cover both sides with a double layer of six (6) mil polyethylene sheeting, spray glued or taped at the joints. Caulk joints watertight at floor, walls, and ceiling.

D. The Abatement Contractor shall visually inspect interior and exterior critical barriers several times daily to assure effective seal and the Abatement Contractor shall repair defects immediately.

E. Equipment room. The equipment room shall be supplied with impermeable, labeled bags and containers for the containment and disposal of contaminated protective equipment.

F. Shower area. Shower facilities shall be provided which comply with 29 CFR 1910.141(d)(3). The showers shall be adjacent both to the equipment room and the clean room.

G. Clean change room. The clean room shall be equipped with a locker or appropriate storage container for each worker's use. Following showering, each worker must then change into street clothing in clean change areas.

H. Decontamination area entry procedures. The Abatement Contractor shall ensure that all workers follow proper decontamination procedures for entry into a Regulated Work area including but not limited to the following:

1. Enter the decontamination area through the clean room;

2. Remove and deposit street clothing within a locker provided for their use;

3. Put on protective clothing and respiratory protection before leaving the clean room.

4. Before entering the Abatement Zone, the Abatement Contractor shall ensure that workers pass through the equipment room.

I. Decontamination area exit procedures. The Abatement Contractor shall ensure that all workers follow proper decontamination procedures for exit from a Regulated Work area including but not limited to the following:

1. Before leaving the regulated area, workers shall remove all gross contamination and debris from their protective clothing.

2. Workers shall remove their protective clothing in the equipment room and deposit the clothing in labeled impermeable bags or containers.

3. Workers shall not remove their respirators in the equipment room.

4. Workers shall shower prior to entering the clean room.

5. After showering, workers shall enter the clean room before changing into street clothes.

J. Equipment Room for Waste Removal: The Abatement Contractor shall establish a two chamber equipment room or area that is adjacent to the Abatement Zone for the decontamination of waste containers and equipment as noted above.

1. The area must be of sufficient size as to accommodate cleaning of equipment and removing waste without spreading contamination beyond the area (as determined by visible accumulations).
2. All equipment and surfaces of containers filled with assumed PCB waste must be cleaned prior to removing them from the equipment room or area.

3.04 ASSUEMD PCB BULK PRODUCT MATERIAL REMOVAL

A. Assumed PCB Bulk Product Waste Materials including window/wall systems caulking/glazing /sealant compounds (including glass, panels, wood, metal, support systems, grout, etc), painted wood walls and roof caulking compound materials shall be handled and removed from specified locations for proper disposal. Bulk Product Waste may also include adjacent building materials per the EPA PCB Bulk Waste Reinterpretation Memorandum dated October 24, 2012.

B. Materials shall be removed in a manner which does not breakdown the materials into fine dust or powder to the extent feasible. Equipment and tools to be utilized shall include hand tools and mechanical equipment such as demolition hammers to remove materials from adjacent substrates. Mechanical removal equipment shall as appropriate be fitted with dust collection systems.

C. Any dry or brittle materials shall be removed with additional engineering controls such as use of a HEPA vacuum to remove accumulated dust or debris during removal.

D. Sequence of removal for the interior/exterior window/wall systems caulking/glazing /sealant compounds (including glass, panels, wood, metal, support systems, grout, etc), painted wood walls and roof caulking compound materials shall follow the following general requirements:

1. Site preparation and controls shall be completed. Work shall not proceed until authorized by owner's representative.

2. Interior/exterior window/wall systems caulking/glazing /sealant compounds (including glass, panels, wood, metal, support systems, grout, etc), painted wood walls and roof caulking compound materials shall be removed in their entirety for disposal as assumed PCB Bulk Product Waste. The removal of the systems shall be performed so that the caulking, glazing and sealant compounds and paint are not disturbed, or as little as possible by abatement/demolition/replacement activities. Hand tools and/or mechanical equipment fitted with dust collection systems are allowed.

3. The adjacent roofing surfaces shall be protected using the horizontal/ ground protections listed throughout this specification.

4. The adjacent surfaces shall be cleaned of all residue using EPA recommended methods.

E. Waste shall be immediately containerized in appropriately polyethylene lined dumpsters. Waste can also be immediately containerized in 6-mil polyethylene disposal bags then placed into steel 55-gallon DOT approved drums for disposal. Waste generated includes assumed PCB <50 ppm. The waste shall be containerized in six-mil polyethylene bags or sheeting. Facilities proposed for disposal shall be permitted to accept waste with PCB >50. See also requirements for asbestos waste disposal in Section 028213.

F. The use of minimal quantities of water to moisten the generated dust prior to collection shall be utilized. Under no circumstances shall the assumed PCB waste show evidence of free liquid water, pooling or ponding within the waste stream. Any liquid used to wet the dust and debris to control fugitive emissions shall be properly containerized and decontaminated in accordance with 40 CFR Part §761.79 (b)(1) or disposed of in accordance with40 CFR Part §761.60 (a).

G. Assumed PCB Bulk Product Waste shall be stored for disposal in accordance with 40 CFR Part §761.65 and marked in accordance with 40 CFR Part §761.40 and §761.45.

H. All waste containers shall be appropriately labeled in accordance with 40 CFR Part §761.40 and §761.45. Labeling shall include the PCB M_L marker.

3.05 CLEANING AND DECONTAMINATION

A. The Abatement Contractor shall be responsible for complete cleaning and decontamination of the Abatement Zone upon completion of work.

B. The Abatement Contractor shall utilize HEPA vacuum and wet cleaning products to remove all visible dust and debris from all surfaces within the work area. If specialty products are utilized the Abatement Contractor shall utilize in accordance with manufacturer's specifications including any additional safety and disposal requirements for such use.

C. Cleaning of work areas shall be performed, decontamination units and negative air filtration devices in place until post abatement visual inspections have been completed. Cleaning shall be performed throughout.

D. Any liquid used to wet the dust and debris to control fugitive emissions shall be collected and decontaminated in accordance with 40 CFR Part §761.79 (b)(1) or disposed of in accordance with §761.60 (a).

E. All rags and other cleaning materials used to clean shall also be properly disposed as PCB Remediation Waste. All assumed PCB Waste shall be stored for disposal in accordance with 40 CFR Part §761.65. All waste containers shall be appropriately marked in accordance with 40 CFR Part §761.40 and §761.45.

F. Equipment to be utilized in connection with the removal of assumed PCB Bulk Product Waste and PCB Remediation Waste including waste collection or that will or may come in direct contact with the site contaminants shall be decontaminated prior to leaving the site to prevent migration of the contaminated residues from the project site. Decontamination shall be in accordance with 40 CFR Part §761.79 and Subpart S procedures.

G. G. All non-disposable equipment and tools employed in the course of the project will be decontaminated at the conclusion of each work day through the following sequence:

H. Initial tap water rinse, to remove gross contaminants

1. Tap water and hexane or equivalent wash

2. Tap water rinse

3. Second tap water and hexane or equivalent wash

4. Second tap water rinse

I. The wash water and decontamination liquids shall be captured and containerized in DOT approved 55-gallon barrels for off-site disposal.

3.06 CONSULTANT'S RESPONSIBILITIES

A. The Abatement Contractor may monitor air quality within the work area to ascertain the protection of employees and to comply with OSHA regulations.

B. The Consultant's project monitor shall provide continual evaluation of the condition of the building during removal, using his/her best professional judgments in respect to the CT DEEP guidelines.

3.07 CONSULTANTS INSPECTION RESPONSIBILITIES

A. The Owner shall retain an industrial hygiene firm (Consultant or other Owner's Authorized Representative) to perform periodic inspections and sampling during the work. Site visits shall be scheduled based on the progress of the work and at critical time periods.

B. Consultant shall conduct inspections throughout the progress of the removal/abatement project. Inspections shall be conducted in order to document the

progress of the removal work as well as the procedures and practices employed by the Abatement Contractor.

C. The Consultant shall perform the following inspections during the course of abatement activities:

1. Pre-commencement Inspection. Pre-commencement inspections shall be performed at the time requested by the abatement Contractor. The Consultant shall be informed 12 hours prior to the time the inspection is needed. If, during the course of the pre-commencement inspection, deficiencies are found, the Abatement Contractor shall perform the necessary adjustments in order to obtain compliance.

2. Work Area Inspections. Work area inspections shall be conducted on a daily basis at the discretion of the Consultant. During the course of the work inspections, the Consultant shall observe the Abatement Contractor's removal procedures, verify barrier integrity, assess project progress, and inform the abatement Contractor of specific remedial activities if deficiencies are noted.

D. Final Visual Inspection. The Consultant, upon the request of Abatement Contractor, shall conduct final visual inspection. The final visual inspection shall be conducted after completion of the final cleaning procedures. The final visual inspection shall verify that all assumed PCB-Containing Material and residual debris have been removed from the work area. If, during the course of the inspection, the Consultant identifies residual dust or debris, the Abatement Contractor shall comply with the request of the Consultant in order to render the area "dust free".

E. **The abatement contractor is responsible for supplying the direct-reading particulate meters (assume a minimum of two meters at all times), performing testing and documenting the daily readings.** The Owner's Consultant or other Authorized Representative may also perform real time monitoring for dust particulate using Dust Trak or equivalent monitoring devices for total dust. Sampling must be performed prior to abatement for background comparison to during abatement sampling. In addition, air sampling outside of the Abatement Zone, must be performed periodically during active removal activities at the Owner's Consultant or other Authorized Representative discretion for laboratory confirmation. It should be noted that if the results of air samples exceed established action levels or ambient background conditions for real time monitoring whichever is less the Abatement Contractor will be required to implement work stoppage to determine causes of exceeding results and as necessary utilize additional containment measures or engineering controls. Any resulting decontamination of areas beyond the Abatement Zone shall be responsibility of the Abatement Contractor.

F. The Consultant or other Owner's Authorized Representative shall perform post removal and decontamination visual clearance inspection as necessary to determine complete removal of assumed PCB's.

G. Once visual inspection has documented the Abatement Zone meets required criteria established the Abatement Contractor shall be permitted to remove decontamination

unit, etc. These areas shall be subjected to a visual inspection to ensure no visible dust is present.

3.08 MARKING OF WASTE CONTAINERS

A. All waste containers must be marked with the name of the waste contained; the date in which the first material was placed in the vessel; and the last date at which addition of waste occurred. All waste containers must be marked with a PCB M_L marker.

B. All waste containers containing assumed PCB Bulk Product Waste, Bulk PCB Remediation Waste and PCB contaminated debris, containment system components, used personnel protective equipment, personal and equipment wash water and decontamination fluids, or other wastes generated during the abatement work shall be labeled as follows:

DOT Class 9 UN3432 (solid)
Or UN2315 (liquid) PCB Waste
RQ
Waste for Disposal
Federal law prohibits improper disposal.

If found, contact the nearest police or public safety authority or the U.S. Environmental Protection Agency.

Generator's Information:
Manifest Tracking No.:
Accumulation Start Date:
EPA ID No.:
EPA Waste No.:
Total Weight:
Container No.:
HANDLE WITH CARE!

In addition, these containers must be marked with a PCB M_L marker.

C. Such marking must be durable, in English and printed on or affixed to the surface of the package or on a label, tag or sign; displayed on a background of sharply contrasting color; un-obscured by labels or attachments and located away from any other marking (such as advertising) that could substantially reduce its effectiveness.

3.09 ON-SITE WASTE MANAGEMENT AND DISPOSAL OF SOLID HAZARDOUS WASTES

A. All solid waste material, containment system components, used personnel protective equipment, and other solid wastes generated during the work, shall be placed directly in appropriate waste receptacles immediately upon removal from its in-situ position. Suitable waste receptacles may consist of roll-off containers or DOT-approved 55-gallon barrels.

B. The Abatement Contractor shall be responsible for all packaging, labeling, transport, disposal, and record-keeping associated with assumed PCB or PCB contaminated waste in accordance with all federal, state and local regulations.

C. The Abatement Contractor shall ensure that the person transporting the waste holds a valid permit issued in accordance with appropriate federal, state, and local regulations.

D. The Abatement Contractor shall provide to the transporter at the time of transfer appropriate shipping records or uniform waste manifests as required by the federal, state and local regulations with a copy to the Owner and Owner's Authorized Representative.

E. Abatement Contractor shall maintain proper follow up procedures to assure that waste materials have been received by the designated waste site in a timely manner and in accordance with all federal, state and local regulations.

F. The Abatement Contractor shall assure that disposal of assumed polychlorinated biphenyls (PCB) containing waste material is at a facility approved to accept such waste and shall provide a tracking/manifest form signed by the landfill's authorized representative.

G. If roll-off containers are to be utilized for containerization of the abatement wastes the following shall apply:

1. All roll-off containers or other similar vessels utilized shall be watertight and lined with 6-mil (minimum) polyethylene sheeting or equivalent impermeable lining, and equipped with a secured and impermeable cover.

2. The impermeable cover shall remain securely in place at all times when material is not being actively placed in the vessels. The Abatement Contractor shall be responsible for ensuring that the cover remains securely intact until the container is removed from the site.

H. If 55-Gallon barrels are to be utilized for waste containerization, the barrels shall consists of suitable DOT-approved 55-gallon barrels that are watertight and free of corrosion, perforations, punctures, or other damage. All barrels shall be securely covered and sealed at the conclusion of each work day.

I. The waste containers shall remain staged at the site with a secure impermeable cover in place until the materials are transported from the site to be delivered to the designated disposal facility.

J. A waste roll-off and barrel staging area shall be designated prior to initiation of the abatement work, and approved by the Owner's Authorized Representative. If this area is located outside of the building, the area (or areas) shall be surrounded by a chain-link fence with a minimum height of six feet. The fence shall be labeled with a PCB ML marker.

K. Properly containerized waste must be transported by a licensed hauler and shipped as assumed PCB Bulk Product Waste for disposal at a permitted soil waste facility in accordance with 761.62(b).

L. Assumed PCB Bulk Product Waste and PCB Remediation Waste must be transported by a licensed hauler and shipped as PCB Abatement for disposal in accordance with 40 CFR 761.61(b) and 40 CFR 761.62 at a facility permitted by the EPA at a hazardous waste landfill permitted by EPA under section 3004 of RCRA, or by a State authorized under section 3006 of RCRA or a chemical waste landfill approved under 40 CFR 761.75 which is an EPA, TSCA approved facility for PCB Bulk Product/Remediation Waste. Remediation Waste must go to an EPA TSCA permitted landfills that can accept such waste such as US Ecology's Wayne Disposal Landfill in Belleville, Michigan or equivalent. Bulk Product Waste will be transported under manifest for off-site disposal to a hazardous waste landfill (EQ's Wayne Disposal Landfill in Belleville, Michigan or equivalent); and/or other appropriate waste will be transported under manifest for off-site disposal at a non-hazardous waste landfill permitted to accept such materials (Waste Management's Turnkey Landfill in Rochester, New Hampshire or GROWS Landfill in Morrisville, Pennsylvania or equivalent). Provide required copies of the uniform waste manifests for assumed PCB Waste to the Owner, waste generation State and waste destination State as required. The waste for this project must go to an approved landfill that can accept mixed assumed PCB> 50 ppm and asbestos and possibly hazardous lead-based paint (wood window waste, etc. depending upon TCLP sample results). The landfill must be approved by the owner and owners representative (consultant) prior to the waste being shipped.

M. Provide required copies of the uniform waste manifests for hazardous wastes to the Owner, waste generation State and waste destination State as required.

N. Any PCB Liquid Water Waste shall be properly containerized and decontaminated in accordance with 40 CFR Part §761.79 (b)(1) or disposed of in accordance with 40 CFR Part §761.60 (a).

O. Any chemicals, solvents or other products used during decontamination shall be properly containerized as PCB Liquid Waste. Waste must be properly decontaminated or disposed in accordance with 40 CFR Part §761.60 (a) or 40 CFR Part §761.79 (g). PCB Liquid Waste shall be transported by a licensed hauler and shipped for treatment or disposal. Provide required copies of the uniform waste manifests for hazardous wastes to the Owner, waste generation State and waste destination State as required.

P. All contaminated waste shall be carefully loaded on trucks or other appropriate vehicles for transport. Before and during transport, care shall be exercised to insure that no unauthorized persons have access to the material.

Q. Transporters of the waste are prohibited from "back hauling" any freight after the disposition of the Owner's waste stream until decontamination of the vehicle and/or trailer is assured.

END OF SECTION

SECTION 03 01 00

CONCRETE DECK REPAIR

PART 1 – GENERAL

1.01 GENERAL REQUIREMENTS

A. Drawings and general provisions of the Contract, including General and Supplementary Conditions and other Division 01 Specification Sections, apply to this Section.

1.02 SCOPE OF WORK

A. CONCRETE ROOF DECK

1. Repair deteriorated areas of concrete deck. Refer to Section 01-2100 and Drawings for allowance for deck repairs.

2. Sound the exposed concrete roof decks. Report findings to Engineer, including any concrete deck damage that extends to the existing reinforcing bars.

3. Remove and repair delaminated, spalled, cracked, honeycombed, and/or otherwise unsound concrete on the topside of the roof decks. Typical repairs anticipated are Shallow Repairs

4. At spall/delamination areas with embedded reinforcement (Deep Repairs):

   a. Remove spalled concrete to expose corroded reinforcing bars and a surface of sound uncontaminated concrete. Remove concrete from behind any exposed steel reinforcement so that repair mortar flows behind bars.

   b. Clean and remove corrosion from all exposed steel reinforcement. Repair all exposed corroded steel reinforcement. Apply corrosion inhibitor coating on exposed steel.

   c. Repair concrete with concrete repair mortar.

5. Fill in concrete deck openings less than 6 in. in diameter with a mineral wool insulation and fireproofing putty. Notify the Engineer if there are any openings larger than 6 in.

6. Repair concrete at roof drain installation; coordinate with work in Section 02 0500 – Selective Removals and Section 07 5000 – Thermoplastic Membrane Roofing.

1.03 RELATED WORK SPECIFIED ELSEWHERE

A. Section 02 5000 – Selective Removals

B. Section 05 5000 – Miscellaneous Metals

C. Section 06 1000 – Rough Carpentry.

D. Section 07 5000 – Thermoplastic Membrane Roofing

E. Section 07 6000 – Sheet Metal Cladding and Flashing.

1.04 DEFINITIONS

A. Cementitious Materials: Portland cement alone or in combination with one or more of blended hydraulic cement, fly ash, slag cement, and other pozzolans.

B. Unsound Concrete: Fractured, delaminated, spalled, or otherwise damaged concrete as determined by the Engineer.

C. Delamination: Horizontal planar cracking of concrete usually caused by corrosion of embedded reinforcing steel.

1.05 REFERENCES

A. Except as modified by the Contract Documents, the references and standards listed apply to the work of this section:

1. CRSI Manual of Standard Practice

2. CRSI – Placing Reinforcing Bars, Recommended Practices.

3. International Concrete Repair Institute (ICRI):

a. Guideline No. 310.1R – Guide for Surface Preparation for the Repair of Deteriorated Concrete Resulting from Reinforcing Steel Corrosion.

b. Guideline No. 310.2R – Selecting and Specifying Concrete Surface Preparation for Sealers, Coatings, and Polymer Overlays.

c. Guideline No. 210.3 – Guide to Using In-Situ Tensile Pull-off Tests to Evaluate Bond of Concrete Surface Materials.

4. ASTM C1583/C1583M-13 – Standard Test Method for Tensile Strength of Concrete Surfaces and the Bond Strength or Tensile Strength of Concrete Repair and Overlay Materials by Direct Tension (Pull-off Method).

5. Follow the latest recommendations and specifications of the American Concrete Institute (ACI):

(1) ACI 301 Specifications for Structural Concrete

(2) ACI 302 Concrete Floor and Slab Construction

(3) ACI 304 Guide for Measuring, Mixing, Transporting and Placing Concrete

(4) ACI 305 Hot Weather Concreting

(5) ACI 306 Cold Weather Concreting

(6) ACI 308 Specification for Curing Concrete

(7) ACI 315 ACI Detailing Manual

(8) ACI 318 Building Code Requirements for Structural Concrete

(9) ACI 347 Guide to Formwork for Concrete

6. The Society for Protective Coatings (SSPC)

(1) SSPC Painting Manual Vol. 1, Good Painting Practice

(2) SSPC Painting Manual Vol. 2, Systems and Specifications

1.06 SUBMITTALS

A. Certifications (in time for review to prevent delay in the work) by the producers of the repair materials and all associated materials that all materials supplied comply with all the requirements of the referenced standards, and that all materials are suitable for the use specified herein.

B. Manufacturer's product data and installation recommendations.

C. Existing conditions survey of the topside of the exposed concrete roof decks noting delaminated and damaged concrete. Coordinate survey with Engineer so that he can be present at the beginning of the survey. At a minimum, record the following information:

1. Dimensions and locations of all unsound concrete areas.

2. Dimensions and locations of all concrete cracks.

3. Do not begin repair work until survey information has been approved by the Engineer.

D. Specialty repair concrete mix proportions and mixing procedures, and application and curing procedures.

E. Steel Reinforcement Shop Drawings. Shop drawings shall be reviewed and approved by Architect and/or Engineer prior to fabrication.

F. Contractor Qualifications:

1. Concrete foreman shall have at least five years' experience supervising the installation of similar concrete repairs at existing roof slabs. Upon request, furnish a minimum of three reference projects on which the foreman has worked with comparable scope. References should list building name and address, designer, general contractor, appropriate subcontractors, and foreman with phone numbers and contact person.

2. Contractor shall maintain qualified personnel who have received product training by a manufacturer's representative.

1.07 PRE-INSTALLATION CONFERENCE

A. Pre-installation Conference conducted at Project Site:

1. Review methods and procedures related to concrete repairs, including, but not limited to, the following:

a. Concrete mixture design.

b. Quality control of concrete materials and concrete repair practices.

2. Require representatives of each entity directly concerned with concrete repair to attend, including the Owner, Engineer, Contractor’s Superintendent, Testing Agencies (as appropriate), Manufacturer, other trades (as appropriate).

1.08 QUALITY CONTROL

A. The Contractor shall conduct a quality control program that includes, but is not limited to, the following:

1. Inspection of all materials to ensure that they conform to contract requirements and that all materials are new and undamaged.

2. Establishment of procedures for executing the work.

3. Inspection of work in progress to ensure that work is being done in accordance with established procedures and specific instructions, if given by the Designer.

4. Inspection of all work completed including visually examining all repairs for cracking and sounding all repairs to check for debonding, and correction of all defective work.

B. The Contractor is responsible for the correction of concrete work that does not conform to the specified requirements, including strength, mix proportions, tolerances, and finishes. Correct deficient concrete as specified by the Engineer.

1.09 PROJECT CONDITIONS

A. Protect the existing building and its contents, exterior components not included in the work, interior finishes, and all site work against all risks associated with this work. Replace damaged components at no charge to Owner and to the satisfaction of the Engineer using mechanics skilled in the appropriate trade including all site work. The premises, including access drives and parking areas, shall be left in a neat, clean, and in a safe condition at the end of each day's work.

1.10 MOCK- UPS

A. The Contractor shall install mockups in trial areas designated by the Engineer to demonstrate that the equipment, personnel, and methods of installation are capable of producing results satisfactory to the Engineer. The mockups shall consist of a minimum of the following repair types and dimensions.

1. Shallow Deck Repair: Minimum 2 SF at two locations.

2. Deep Deck Repair: Minimum 2 SF at two locations

B. The mockups shall be constructed in the same manner as intended for the remaining concrete repairs, including removal, surface preparation, installation, and curing. The Engineer shall inspect the prepared surfaces prior to placement of repair concrete.

C. After installation, the mockups shall be inspected by sounding. The presence of any unbonded areas shall be cause for rejection.

D. If necessary, the mockups shall be repeated until the repair concrete can be installed successfully.

E. Successful mockups may be incorporated into the final repairs.

1.11 WARRANTY

A. Guarantee all work under this Section in a document stating that if, within 2 years after the Date of Substantial Completion of the Work, any of the work of this Section is found to be defective or not in accordance with the Contract Documents, the Contractor shall, at its sole cost and expense, correct it promptly after receipt of a written notice from the Owner to do so, unless the Owner has previously given the Contractor a written acceptance of such condition. Also, state that the Contractor shall bear all costs incurred by the Owner, including reasonable attorney's fees, court costs, and expert witness and consultant fees, to enforce Contractor's compliance with the obligations of this Guarantee. The obligations of this Guarantee shall run directly to the Owner and its successors and assigns and may be enforced by the Owner and its successors and assigns against the Contractor, shall survive the termination of the Contract, and shall not be limited by conditions other than this Contract.

PART 2 – PRODUCTS

2.01 CONCRETE REPAIR MATERIALS

A. Specialty Mortar for Thin Shallow Repairs (thickness less than 1-1/2 in.)

1. MasterEmaco T 1061 (Formerly 10-61 Rapid Mortar) by BASF Corporation Building Systems

2. SikaQuick 1000 proportioned with water and SikaLatex R by Sika Corporation, Lyndhurst, New Jersey

3. Approved equal

B. Latex-Modified Specialty Mortar/Concrete for Deep Deck Repairs (thickness equal to or larger than 1-1/2 in.):

1. MasterEmaco S 440 (formerly LA40 Repair Mortar) by BASF Corporation Building Systems

2. SikaQuick 1000 proportioned with water and SikaLatex R by Sika Corporation and extended with coarse aggregate per manufacturer's requirements.

a. Coarse aggregate shall conform to ASTM C33. Aggregate shall be nominal 3/8 in. maximum size (No. 8 distribution per ASTM C33, Table II), clean, well-graded, and saturated surface dry, and shall have low absorption and high density. Aggregate shall be certified by the supplier as being nonreactive in accordance with ASTM C1260 or ASTM C1293 or shall have a demonstrated satisfactory performance history.

3. SikaCrete 211 SCC Plus by Sika Corporation

4. Approved equal

5. Water content for repair mortar shall not exceed manufacturer's recommended amount, and shall be carefully monitored to prevent segregation of the fine aggregates during placement and vibration.

C. Water: Clean, potable

D. Moisture-Retaining Cover: One of the following, complying with ASTM C171:

1. Polyethylene-coated, blended polyester fabric.

a. HydraCure Wet Curing Cover, PNA Construction Technologies, Inc.,

2. Polyethylene film.

3. Polyethylene-coated burlap.

2.02 STEEL REINFORCEMENT AND REINFORCEMENT REPAIR MATERIALS

A. Reinforcement Coating: Sika Armatec 110 EpoCem by Sika Corporation.

B. Steel Reinforcing and Deformed Dowels: ASTM A615 Grade 60

C. Tie Wire: 18 ga or heavier, black annealed, ASTM A82

D. Accessories: wire bar supports conforming to the requirements of the Concrete Reinforcing Steel Institute with plastic tips.

E. Epoxy for Setting Deformed Bars into Existing Slab: Hilti HIT-HY 200 Epoxy Adhesive

2.03 DECK INFILL MATERIALS

A. Firestop System at Openings in Concrete Deck: System to provide 3 hour F Rating and 3 Hour T rating. Basis of design is Hilti System No. C-AJ-0086.

1. Putty: Hilti CP 618 Putty Stick

2. Mineral Wool Insulation: Toprock DD by Rockwool.

PART 3 – EXECUTION

3.01 LOCATION OF REPAIR AREAS

A. The Drawings do not show the extent of the concrete repairs because the condition of the topside of the slab is concealed. The Contractor is responsible for visually inspecting and sounding all concrete surfaces, as required to discover and repair all deteriorated concrete, once the existing roofing are removed. The final repair extents will be determined and approved by the Engineer and Owner based on the deterioration exposed by the preparation described in Paras. 3.03 and 3.04.

3.02 GENERAL

A. Finish the surface of the repair area to be flush with the finish of adjacent concrete surfaces per approved mockup except where required to provide minimum cover. Consult with Engineer before finishing patches other than flush with surrounding surfaces. The repair surfaces shall be free of ridges and sharp projections.

3.03 REMOVAL AND SURFACE PREPARATION

A. The Contractor is responsible for visually inspecting and sounding all concrete surfaces as required to discover and to repair all deteriorated concrete as directed by the Engineer and in accordance with the requirements of the Drawings and Specifications.

B. Provide saw-cut edges around the perimeter of all repair areas, normal to the face of the surrounding concrete (depth as shown on the Drawings or as directed by

Engineer). The saw cuts shall form polygon-shaped areas that have 90° corners and enclose the deteriorated area. Make saw cuts after sufficient concrete is removed to locate and determine actual concrete cover over reinforcement. Reduce depth of saw cuts over reinforcement to avoid cutting into existing reinforcement. If reinforcement is cut, and cut results in greater than 15% loss of section, then Contractor shall provide new reinforcement with a Class B lap splice on either side of the cut at Contractor's expense.

C. Remove all loose and unsound concrete in the area to be repaired. Use maximum 15 lb electric hammers. No pneumatic tools are to be used. Remove concrete to such additional breadth and depth as required to expose uncorroded reinforcement and a surface of sound uncontaminated concrete. Remove concrete to a minimum depth of 3/4 in. beyond the innermost layer of longitudinal reinforcement. Roughen concrete surface to minimum amplitude of 1/4 in. or a surface profile as required by the manufacturer of specialty mortar/concrete. Conduct concrete removal in a manner as to prevent cutting, nicking, bending, or otherwise damaging reinforcement. Repair or replace reinforcement that is damaged due to concrete removal at Contractor's expense.

D. Remove all loose particles and deleterious materials from the exposed sound concrete, exposed reinforcement, and accessories by sandblasting or pressure washing with abrasive media induction. Clean reinforcing bars to SSPC-6, commercial blast finish, or better.

3.04 REINFORCEMENT

A. Existing reinforcement with metal loss greater than 15% of the original bar cross section shall be brought to the attention of the Engineer for strength evaluation prior to continuing repair work.

B. Provide supplemental reinforcement and deformed dowels as shown on the Drawings and as directed by the Engineer. Tie the supplemental reinforcement to existing bars with a minimum lap of 40 bar diameters.

C. Provide accessories to support existing and supplemental reinforcement in accordance with the requirements of CRSI and as directed by the Engineer.

D. Coat all exposed reinforcement, accessories, and other embedded metal with protective coating in accordance with the manufacturer's written instructions.

3.05 GENERAL CONCRETE PLACEMENT

A. Before placing concrete, verify that installation of formwork, reinforcement, and embedded items is complete and that required inspections have been performed.

B. Cold-Weather Placement: Comply with ACI 306.1 and as follows. Protect concrete work from physical damage or reduced strength that could be caused by frost, freezing actions, or low temperatures.

1. When average high and low temperature is expected to fall below 40 deg F (4.4 deg C) for three successive days, maintain delivered concrete mixture temperature within the temperature range required by ACI 301.

2. Do not use frozen materials or materials containing ice or snow. Do not place concrete on frozen subgrade or on subgrade containing frozen materials.

3. Do not use calcium chloride, salt, or other materials containing antifreeze agents or chemical accelerators unless otherwise specified and approved in mixture designs.

C. Hot-Weather Placement: Comply with ACI 305 and as follows:

1. Maintain concrete temperature below 90 deg F (32 deg C) at time of placement. Chilled mixing water or chopped ice may be used to control temperature, provided water equivalent of ice is calculated to total amount of mixing water. Using liquid nitrogen to cool concrete is Contractor's option.

2. Fog-spray forms, steel reinforcement, and subgrade just before placing concrete. Keep subgrade uniformly moist without standing water, soft spots, or dry areas.

D. Concrete shall be mixed and placed in accordance with ACI guidelines and specifications, including Sections 1 through 5 of ACI 301, except as modified herein.

1. Concrete placement shall be in accordance with the approved placement layout drawings and schedule and shall be continuous within approved expansion-joint or cold-joint locations.

2. Concrete placement will not be permitted when weather conditions prevent proper placement and consolidation, or when concrete that has attained its initial set, or if concrete is more than 1-1/2 hrs old.

3. Deposit concrete in forms as near as practical in its final position. Prevent splashing of forms or reinforcement with concrete in advance of placing concrete.

4. Do not allow concrete to drop freely.

E. Float surface once it has sufficiently stiffened. Check planeness of surface with a 10 ft straightedge in all directions. Cut down high spots and fill low areas.

3.06 MORTAR/CONCRETE PLACEMENT FOR TOPSIDE SLAB REPAIR

A. Remove dust and debris from the previously prepared surfaces of sound concrete by sweeping and blowing with compressed air.

B. After the bonding surface has been cleaned, and at least 2 hrs prior to placing concrete, pre-wet the bonding surface with a uniform spray application of water. Puddles shall be blown clean. Surface shall be maintained in a saturated surface dry (SSD) condition. Immediately before placing concrete, a coating of bonding grout

shall be scrubbed into the SSD, prepared surface. Care shall be exercised to ensure that all parts receive a thorough, even coating and that no excess grout is permitted to collect in pockets. The rate of progress in applying grout shall be limited so that grout does not become dry before it is covered with concrete.

C. The new mortar/concrete shall be spread and vibrated internally. It shall then be screeded to restore the original slab profile or to a profile directed by the Engineer.

D. Finish the concrete surface with a hair broom finish and in accordance with the waterproofing manufacturer's written specifications to be suitable for application of the waterproofing.

E. Cure with wet burlap and plastic for at least three days or as recommended by the manufacturer.

END OF SECTION

SECTION 04-5000

UNIT MASONRY

PART 1 – GENERAL

1.01 GENERAL REQUIREMENTS

A. Drawings and general provisions of the Contract, including General and Supplementary Conditions and other Division 01 Specification Sections, apply to this Section.

1.02 SCOPE OF WORK

A. Provide reinforced and grouted CMU masonry infill in the Lecture Hall windows as shown.

B. Provide glass block masonry, anchors, and joint reinforcement at Stair Tower window openings.

C. Alternate 1: Cut reglet for in CMU rising wall.

1.03 RELATED WORK SPECIFIED ELSEWHERE

A. Section 02 5000 – Selective Removals

B. Section 06 1000 – Rough Carpentry.

C. Section 07 5000 – Thermoplastic Membrane Roofing.

D. Section 07 6000 – Sheet Metal Cladding and Flashing.

E. Section 07 9200 – Joint Sealants.

F. Section 09 9113 – Painting

1.04 REFERENCED STANDARDS

A. The following documents are a part of this Specification, except as modified in the technical sections of the Specifications, including the references contained in each document. Comply with all applicable Sections of the document and the referenced standards unless specifically modified herein.

1. Product manufacturer's written recommendations.

2. ASTM International (ASTM): Standards as specified or referenced herein and as applicable to the work being performed and materials being installed.

1.05 PROJECT CONDITIONS

A. Protect the existing building and its contents, exterior components not included in the work, interior finishes, and all site work (landscaping) during all removal and repair operations against all risks associated with this work. Replace damaged components at no charge to the Owner and to the satisfaction of the Engineer using mechanics skilled in the appropriate trade, including all site work. The premises, including access drives and parking areas, shall be left in a neat, clean, and safe condition at the end of each day's work.

B. Do not damage existing building components, including flashing, roofing, and backup materials scheduled to remain when completing work. Provide adequate protection of the window glass and frames to prevent breakage, scratches, and any other damage during work associated with this Section.

C. Do not allow mortar droppings to remain on face of masonry, windows (glass or aluminum surfaces), or other building components to prevent staining.

D. Protect building occupants, pedestrians, and vehicles from all risks associated with this work. Erect fencing and barricades as required to keep pedestrians out of the work area at all times.

1.06 QUALITY CONTROL AND QUALITY ASSURANCE

A. Perform all work in strict accordance with all applicable laws and regulations, including the building code and OSHA regulations. Perform all work in accordance with the requirements of all authorities having jurisdiction. All such regulations and requirements shall take precedence over the requirements of the Specifications except where the requirements of the Specifications are more exacting or stringent.

1.07 WARRANTY

A. Guarantee all work under this Section in a document stating that if, within two years after the Date of Substantial Completion of the Work, any of the work of this Section is found to be defective or not in accordance with the Contract Documents, the Contractor shall correct it promptly after receipt of a written notice from the University to do so. Also, state that the Contractor shall bear all costs incurred by the University, including reasonable attorney's fees, to enforce compliance with the obligations of this Guarantee. The obligation of these Guarantees shall run directly to the University and may be enforced by the University against the Contractor, shall survive the termination of the Contract, and shall not be limited by conditions other than this Contract.

1.08 SUBMITTALS

A. Submit the following items to the Engineer for approval in advance of the work and with sufficient time to allow for review of the submittals and resubmittal if required, and as necessary to avoid delaying the work:

1. Samples and/or manufacturer's literature for all materials specified and proposed for use on this project, each properly labeled.

2. Manufacturer's installation recommendations for all materials used on this project.

3. Safety Data Sheets (MSDS) for all materials to be used.

4. Certifications by the producers of all materials that all materials supplied comply with all the requirements of these Specifications and the appropriate industry standards.

B. Mortar Mix Design. Submit proposed mortar mix design. The Contractor shall warrant by the submission of the design mixes that such mixes are representative of the mortar that the Contractor intends to supply to meet the requirements of the Contract Documents. Submit new design mixes for review and approval when any change in materials is required or needed.

C. Samples of proposed glass block and additional required materials.

D. Anchor Pull Tests: Perform pull tests of the proposed glass block reinforcement anchors. The anchor manufacturer must be present for the tests.

PART 2 – PRODUCTS

2.01 MATERIALS

A. Concrete Masonry Units (CMU): Hollow load bearing concrete masonry units, Type 1, ASTM C 90, two core. Shape and size to match existing construction or as needed to construct infill. Provide normal-weight density units with minimum average net-area compressive strength of 2,800 psi.

B. Mortar: Mortar meeting the requirements of ASTM C270 Type N, with nominal proportions 1:1:6 (cement: lime: sand). Do not use ground limestone or prepared masonry mortar mixes. Do not use admixtures without written approval by the Engineer. Mortar constituents as follows:

1. Sand: Sand meeting the requirements of ASTM C144, fineness modulus 2.0 to 2.5.

2. Cement: Portland cement meeting the requirements of ASTM C150, Type 1 or Type 2 (nonstaining), low alkali (equivalent alkalis less than 0.6%).

3. Lime: Hydrated lime meeting the requirements of ASTM C207 Type S.

4. Water: Potable.

C. Grout: Meeting the requirements of ASTM C467, course. Provide proportions by volume of 1:3 (portland cement: sand). Do not use admixtures without written approval by the Engineer. Grout constituents as follows:

1. Cement: Portland cement meeting the requirements of ASTM C150, Type 1 (nonstaining).

2. Water: Potable.

3. Aggregate: Meeting the requirements of ASTM C404.

D. CMU Reinforcement:

1. Reinforcing Bars for CMU: ASTM A615, Grade 60, deformed steel bars.

2. Horizontal Joint Reinforcement: Meeting the requirements of ASTM A951. Horizontal reinforcement to be fully welded round 3/16 in. dia. stainless steel Type 304 wire. Provide in multiple widths as required.

3. Steel Dowels: Threaded rod, 1/2 in. dia., unless noted otherwise on the Drawings, 3-1/2 in. minimum embedment unless noted otherwise.

E. Epoxy-Set Anchors (for dowels and reinforcement):

1. Epoxy in Concrete: Hilti HY-200 Adhesive anchoring system.

F. Glass Block: 11.811 in. square 3.93 in. thick clear glass block. 3030/10 Clearview by Seves Glass Block or approved equal.

1. Glass Block Mortar: ProMasonry Glass Block Mortar by Conproco or similar mix of cement, lime, and aggregates mixed with polymer and other additives adhering to ASTM C109 – Standard Test Method for Compressive Strength of Hydraulic Cement Mortars, using 2-in. cube specimens, to ensure a durable, waterproof joint.

2. Expansion Strip: Closed-cell neoprene sponge 3/8 in. thick (or to match joint thickness) and 3 in. width.

3. Glass Block Anchor: Glass Block Panel Anchor by Hohmann & Barnard, Inc. or equal. 1-3/4 in. wide by 24 in. long. Type 304 stainless steel.

4. Glass Block Reinforcement: Hohmann & Barnard 220 Glass Block Reinforcement, Type 304 stainless steel, 2 in. width, and length so continuous across window opening.

G. Masonry Fasteners: Concrete and masonry screws, stainless steel, hex head, KWIK-CON II+ by Hilti or equal, ¼ in. diameter, in length to provide minimum 2 in. embedment into substrate.

H. Shims: Solid rigid plastic rectangular shims (horseshoe shims not acceptable) UV stable, with a minimum compressive strength of 8 ksi or stainless steel. Shims to cover full depth of masonry in thickness to match joint width.

I. Weeps: Dur-O-Wall Cell Vent Weep-Hole Ventilator, 3/8 in thick, 3-5/8 in. deep; length to extend the full depth of the mortar joint

PART 3 – EXECUTION

3.01 EXAMINATION

A. Verify all site conditions and dimensions by field measurements in consideration of the special conditions associated with alterations of existing construction and reconstruction. Notify the Engineer immediately of any inconsistency between field conditions found during demolition and those shown in the Contract Drawings. The Engineer will determine what modifications or additional repairs are necessary.

3.02 GENERAL WORKMANSHIP

A. Masonry workmanship shall comply with all applicable recommendations of the Brick Institute of America and Specifications for Masonry Structures ACI 530, except as modified below. Do not proceed with masonry installation until all associated flashings are installed. Report any damage to new flashing work within the work area to the Engineer and provide for repairs by appropriately skilled mechanics.

B. Masonry construction should match the existing masonry construction. Any unspecified variances from the existing construction will be cause for rejection.

C. Conduct all masonry work in a neat and workmanlike manner to prevent staining any surface with mortar or other spills. Keep all exposed surfaces of the masonry free from mortar at all times. Avoid dropping mortar on completed masonry work or other elements of the building. If mortar drops or spills, spot-clean immediately using a clean sponge and clean water before mortar can set. Do not allow mortar to collect in cavity; keep cavity clean.

D. Mix mortar using sufficient quantity of water to ensure good workability in accordance with BIA recommendations. For each batch, measure cement and lime by volume or equivalent weight. Measure material with an approved device. Measure sand by weight or in calibrated containers, with allowance made for moisture content, bulking, and consolidation. Do not use shovel measurements. Mix by machine only, for at least 3 min., but not more than 5 min. Use mortar within 2 hrs of mixing at temperatures over 74°F, and 2-1/2 hrs at temperatures between 50°F and 74°F. Discard hardening mortar.

E. Where required, cut masonry with a motor-driven saw to obtain true, even, and undamaged edges. Do not overcut into adjacent masonry or leave damaged exposed surfaces after cutting is complete.

F. Lay all masonry plumb and true, with uniform and level joints. Coursing and patterns shall match the original pattern and the approved shop drawings. Periodically check coursing against control to avoid accumulated errors.

G. Lay full bed of mortar and immediately set masonry to prevent drying out. Do not furrow bed joints. Completely butter the ends and head of each unit with mortar and shove the unit into place so that mortar squeezes out of the top of the head joint and bed joint. Cut off and scoop out the mortar that extrudes from bed and head joints on outer and inner faces of the wythe. Do not disturb, tap, shove, or push unit once they are laid in their final position. Set large units such that their weight is supported

by shims, not the mortar bed. If shims are used, recess at least 1 in. from the face to permit adequate mortar coverage.

H. Strike exterior of mortar joints to a concave flush during laying. When mortar is thumbprint-hard on exposed surfaces, tool joints to match the concave mortar joint to compact the mortar thoroughly.

I. Hot Weather:

1. Above 80°F: Protect the masonry and mortar from direct sunlight and exposure to wind to avoid rapid evaporation of water in the mortar before, during, and after masonry construction.

2. Above 90°F: Do not use mortar when masonry surface temperature is above 90°F. Protect the masonry and mortar from direct sunlight and exposure to wind to avoid rapid evaporation of water in the mortar before, during, and after masonry construction.

J. Cold Weather (below 40°F): Do not work in average daily temperatures below 40°F without providing cold weather protection as described in ACI 530 and outlined in the table below. Continue to operate heaters overnight with appropriate supervision. Do not use heaters that produce oily deposits on the masonry. If any oily deposits occur, consult with the Engineer to determine how best to remove oily deposits and remove at the Contractor's expense.

Temp.	WORK IN PROGRESS			COMPLETED WORK
	Brick	**Mortar**	**Assemblage**	**Assemblage**
Above 40°F	No Requirements	No Requirements	No Requirements	No Requirements
40°F to 25°F	Remove visible ice.	Heat during mixing to between 40°F and 120°F. Maintain above freezing while in use.	No Requirements.	Protect masonry with a weather-resistive cover for 24 hrs after construction. Completely cover masonry when temp. is below 32°F.
25°F to 20°F	Remove visible ice.	Heat during mixing to between 40°F and 120°F. Maintain above freezing while in use.	Use heat sources on both sides of the wall. Install wind breaks when velocity is over 15 mph.	Completely cover with insulated blanket for 24 hrs after construction.
Below 20°F	Heat to above 20°F; remove visible ice.	Heat during mixing to between 40°F and 120°F. Maintain above freezing while in use.	Provide an enclosure and use heat sources to maintain temp. above 32°F within the enclosure.	Provide an enclosure and use heat sources to maintain temp. above 32°F within the enclosure.

K. Measure cementitious and aggregate material for use in mortar in a dry condition by volume only. Measure materials with an approved device, not by shovel. Mix materials in a clean mechanical batch mixer. Thoroughly mix cementitious and aggregate materials together before adding any water. Add enough water to produce a damp, unworkable mix that will retain its form when pressed into a ball.

Maintain mortar in this dampened condition for 1 to 1-1/2 hrs. Add remaining water in small portions until mortar of desired consistency is reached. Use within 1 hr of final mixing. Do not retemper mortar. Discard hardening mortar.

L. Laying Masonry Walls

1. CMU Masonry: Lay exposed CMU masonry in running bond.

2. Stopping and Resuming Work: Stop work by racking back units in each course from those in course below; do not tooth. When resuming work, clean masonry surfaces that are to receive mortar before laying fresh masonry.

M. Reinforced Unit Masonry Installation

1. Temporary Formwork and Shores: Construct formwork and shores as needed to support reinforced masonry elements during construction.

2. Placing Reinforcement: Meet the requirements of ACI 530.1/ASCE 6/TMS 602.

3. Grouting: Meet the requirements in ACI 530.1/ASCE 6/TMS 602 for cleanouts and for grout placement, including minimum grout space and maximum pour height.

a. Ensure that all reinforcement is placed according to the Shop Drawings and has been approved by the Consultant before placing grout.

b. Place grout within 1-1/2 hrs after mixing. Mix grout with an 8 in. to 10 in. slump.

c. Remove all debris and mortar from cavity or cell before pouring grout.

d. Limit height of vertical grout pours to not more than 60 in.

e. Consolidate the grout using mechanical vibration at the time of placement. For confined areas, use a pencil vibrator (3/4 in. dia. or less).

f. Reconsolidate grout approximately 1/2 hr after placement, after the initial water loss has occurred.

N. Masonry Joint Reinforcement

1. Provide entire length of longitudinal side rods in mortar with a minimum cover of 5/8 in. on exterior side of walls, 1/2 in. elsewhere. Lap reinforcement minimum 6 in.

2. Space reinforcement not more than 16 in. o.c.

3. Provide reinforcement not more than 8 in. above and below wall openings and extending 12 in. beyond openings, in addition to continuous reinforcement.

O. Epoxy Anchor and Dowel Installation

1. Establish anchor locations as shown on the Drawings. Use string lines and other leveling devices to ensure proper horizontal and vertical placement.

2. Drill holes to the specified depth as indicated on the approved drawings; notify the Consultant before drilling if depth of hole exceeds half-length of piece into which hole is being drilled. Unless otherwise noted, holes shall be 1/16 in. larger in diameter than the anchor to be used, e.g., 9/16 in. dia. holes for 1/2 in. dia. anchors. Maintain a 3 in. minimum edge distance.

3. Clean holes of all dust and debris using vacuum cleaner, compressed air free of oil, and a stiff, cylindrical nylon bristle brush of sufficient length to clean the full depth of the hole in the backup. Alternate application of compressed air and clearing hole with brush, until neither operation produces any dust. Do not use metal wire brushes to clean holes.

4. Load two-part epoxy cartridge into double-barrel caulking gun. Remove cap on cartridge and verify that the two components of epoxy have not been contaminated at the end of the tube. Discard any hardened, partially hardened, or partially mixed epoxy. Attach static mixing head to tip of epoxy cartridge, using nut supplied by manufacturer. Pump epoxy into waste container until both components are fully mixed and epoxy is a uniform color, is not “marbled,” and does not contain any light or dark streaks of one or the other unmixed component when pumped from the end. Pump additional epoxy for two more full squeezes on the gun to assure complete mixing at tip.

5. Insert the mixing tip into the hole. Starting from the rear, fill hole with epoxy until one-half to two-thirds full.

6. Insert anchors of appropriate lengths into the center of the holes. Gently push the anchors into the epoxy to the bottom of the hole in the masonry. As the anchor is pushed into the masonry, slowly rotate anchor counterclockwise.

7. Do not disturb anchor between the specified gel and cure time.

8. Anchors in epoxy that do not cure properly must be abandoned and replaced with new anchors. Holes and threaded rod with failed epoxy cannot be reused and must be discarded and replaced. After epoxy manufacturer’s specified cure time for current environmental conditions, check that epoxy in the masonry has cured by performing the following test:

9. Probe the epoxy in the hole with a #9 stainless steel wire, checking for any softness in the epoxy. If the wire makes a depression in the epoxy, replace the anchor at no cost to the Owner. Provide new anchor at least 3 in. away from the abandoned anchor.

3.03 GLASS BLOCK WINDOW INSTALLATION

A. Provide full, minimum ¼ in. thick mortar head and bed joints unless otherwise required for spacing. Do not cut glass masonry units. Provide reinforcement and anchors as shown on the Drawings or at 16 in. o.c. minimum.

B. Clean glass block windows. Do not clean glass block with masonry cleaners. Use a wet sponge to clean mortar from the glass block while it is still plastic. Wash from top to bottom using clean water and rags. Take care not to scratch surface of glass block. After cleaning, allow film to dry to a power that can be removed with a soft, dry cloth.

END OF SECTION

SECTION 05-5000

MISCELLANEOUS METALS

PART 1 – GENERAL

1.01 GENERAL REQUIREMENTS

A. Drawings and general provisions of the Contract, including General and Supplementary Conditions and other Division 01 Specification Sections, apply to this Section.

1.02 SCOPE OF WORK

A. At the north steel mechanical platform west end, provide two new HSS posts, W section bracing, kicker bracing, cap plates, baseplates, and shear tabs . Weld the new W section, cap plates, baseplates, posts, and shear tabs. Weld kicker plates to the existing beam. Bolt the existing beam to the posts and kicker bracing to new steel plates. Reuse the existing adhesive baseplate anchors.

B. At the north steel mechanical platform east end, cut the existing steel frame connection, provide new angles welded to the existing steel tube connection, and bolt the angles to the existing beam.

C. At the south steel mechanical platform west end, provide a two new HSS posts, W section bracing, kicker bracing, cap plates, baseplates, shear tabs, and stiffeners. Weld the cap plates, baseplates, posts, shear tabs, kicker plates, and stiffeners. Bolt the posts to the new W section bracing and the existing beam to the bracing. Provide new adhesive baseplate anchors.

D. At the south steel mechanical platform east end, provide two new HSS posts, two WT sections, cap plates, and baseplates. Weld cap plates and baseplates to the posts. Provide new adhesive baseplate anchors and adhesive anchors from the WT sections into the existing concrete column. Bolt the WT section and post to the existing beam.

E. Provide galvanized steel posts for guy wires and mechanical equipment where indicated on the Drawings.

1.03 RELATED WORK SPECIFIED ELSEWHERE

A. Section 02 5000 – Selective Removals

B. Section 02 8200 – Selective Hazardous Building Materials Abatement Demolition.

C. Section 02 8213 – Asbestos Abatement.

D. Section 02 8313 – Lead-Based Paint Awareness.

E. Section 02 8416 – Universal Waste Removal and Recycling.

F. Section 02 8432 – PCBs Greater than 50 PPM Remediation.

G. Section 04 2000 – Unit Masonry.

H. Section 07 5000 – Thermoplastic Membrane Roofing

I. Section 07 6000 – Sheet Metal Cladding and Flashing.

1.04 REFERENCED STANDARDS

A. The following documents are a part of this Specification, except as modified in the technical sections of the Specifications, including the references contained in each document. Comply with all applicable Sections of the document and the referenced standards unless specifically modified herein.

1. 2018 Connecticut State Building Code which includes the Amendments.

2. Product manufacturer's written recommendations.

3. ASTM International (ASTM): Standards as specified or referenced herein.

4. American Institute of Steel Construction (AISC) Manual of Steel Construction, 2010.

5. AISC 360-10 Specification for Structural Steel Buildings

6. AISC 341-10 Seismic Provisions for Structural Steel Buildings, Including Supplement No. 1

7. AWS Structural Welding Code – Steel, AWS D1.1-10.

8. Welders shall be qualified in accordance with AWS D1.1 and D1.6 for the weld procedures and types of welds specified herein.

1.05 SUBMITTALS

A. Submit the following items from the Fabricator:

1. Provide certification on Fabricator's letterhead that materials and finishes furnished are as herein specified.

2. Provide certification that the Fabricator meets AISC Standard for Steel Building Structures quality certification.

B. Safety Data Sheets (SDS) for all materials to be used.

C. Certifications (in time to prevent delay in the work) by the producers of all materials that all materials supplied comply with all the requirements of these Specifications and the appropriate standards.

D. Shop Drawings: Submit shop drawings from field measurements of all steel membrane and connections, showing exact profile, sizes, fabrication details, and methods of attachment.

E. Welding Certificates.

1.06 MOCKUPS

A. Mockup: Perform a mockup of one guy wire base and wire reattachment at areas selected by the Engineer. The approved mockups shall remain as part of the complete work. Notify the Engineer at least 48 hours before starting the work on each mockup. Reconstruct each mockup as many times as necessary to meet the approval of the Engineer. Do not proceed with any part of the work before the mockup is approved by the Engineer. Mockups will be used to establish both technical and aesthetic standards for the remainder of the project. The approved mockup may become part of the finished work.

B. Mockups must be prepared by scheduled installer. Include all required flashing, membranes, fasteners, and other components as required. Note that flashing installation mockups must be in place and approved before subsequent installation can continue

1.07 WARRANTY

A. Guarantee all work under this Section in a document stating that if, within 2 years after the Date of Substantial Completion of the Work, any of the work of this Section is found to be defective or not in accordance with the Contract Documents, the Contractor shall, at its sole cost and expense, correct it promptly after receipt of a written notice from the Owner to do so, unless the Owner has previously given the Contractor a written acceptance of such condition. Also, state that the Contractor shall bear all costs incurred by the Owner, including reasonable attorney's fees, court costs, and expert witness and consultant fees, to enforce Contractor's compliance with the obligations of this Guarantee. The obligations of this Guarantee shall run directly to the Owner and its successors and assigns and may be enforced by the Owner and its successors and assigns against the Contractor, shall survive the termination of the Contract, and shall not be limited by conditions other than this Contract.

PART 2 – PRODUCTS

2.01 MATERIALS

A. Structural Steel: Steel plates, angles, and channels– ASTM A36, with G-90 hot-dipped galvanized finish. Wide Flange Shapes: ASTM A992.

B. Hollow Structural Shapes (HSS): ASTM A500 Grade B- (Fy=46,000 PSI) or ASTM A1085 (Fy=50,000 PSI).

C. Bolted Connections: ASTM A325 and A490. See Steel Details. Tension-control bolts acceptable.

D. Welding Electrodes: Confirm to AWS Specifications for electrodes based on welding process and the type and grade of steel. E70XX electrodes (min.) for fillet welds.

E. Fabrication: Shop fabricate to greates extent possible by welding including beam stiffeners, column caps and bases, holes, and connections. Submit complete sop drawings from field dimensions for the Engineer's approval of all structural steel prior to fabrications.

F. Erection: Provide anchor rods, steel wedges, threaded screws, or shims to support and plumb all columns. Grout solid under base plates immediately after columns are plumb. Provide bearing plates and wall anchors or anchor rods for all beams resting on concrete and all other necessary connecting hardware. Set anchor rods using template. Do not field cut or field modify any structural steel without prior written approval by the Engineer for each specific case.

G. Paint: Refer to Division 09 2000 – Painting for painting scope at the steel mechanical platforms.

H. Hot-Dip Galvanizing:

1. All steel, including but not limited to structural members, connection materials, and miscellaneous metals shall be hot-dip galvanized. All field welds, or areas where hot-dip galvanizing is damaged, shall be touched-up with a zinc-rich paint ("cold galvanizing") after steel is completely installed.

2. Plug weld vent holes after galvanizing.

3. Seal weld all seams not otherwise welded.

I. Anchors for Steel Base for Guy Wire: 3/8 in. diameter steel expansion anchors, round or bolt head. Hilti Kwik Bolt TZ or equal. Provide in length to obtain highest effective embedment into the concrete deck, 2 in. minumum.

J. Anchors for Steel Platform into Concrete: Stainless Steel Epoxy Adhesive Anchors, diameter and embedment as shown on drawings. Hilti HY-200 or equal.

PART 3 – EXECUTION

3.01 EXAMINATION

A. Verify all site conditions and dimensions by field measurements in consideration of the special conditions associated with alterations of existing construction and reconstruction. Notify the Engineer immediately of any inconsistency between field conditions found during demolition and those shown in the Contract Drawings. The Engineer will determine what modifications or additional repairs are necessary.

3.02 GENERAL WORKMANSHIP

A. Provide all fabrications true to line, level, and plumb as shown on the Drawings.

B. Support all construction as necessary until full and permanent connections are completed. Provide shoring for the existing construction as necessary.

C. Cutting, Fitting, and Placement: Perform cutting, drilling, and fitting required for installing metal fabrications. Set metal fabrications accurately in location, alignment, and elevations; with edges and surfaces level, plumb, true and free of rack; and measured from established line and levels.

D. Welding, wherever possible, shall be done in the shop. No field welding, except as specifically shown on the construction documents, shall be performed without written consent from the Engineer. If field welding is approved, submit procedures for welding protection and safety. Provide all necessary fire protection and protection for occupants and contents. Proper ventilation and fume removal are essential. When field welding comply with the following requirements:

1. Use materials and methods that minimize distortion and develop strength and corrosion resistance of base metals.

2. Obtain fusion without undercut or overlap

3. Remove welding flux immediately.

E. Fastening to In-Place Construction: Provide anchorage devices and fasteners where metal fabrications are required to be fastened to in-place construction.

END OF SECTION

SECTION 06-1000

ROUGH CARPENTRY

PART 1 – GENERAL

1.01 GENERAL REQUIREMENTS

A. Drawings and general provisions of the Contract, including General and Supplementary Conditions and other Division 01 Specification Sections, apply to this Section.

1.02 SCOPE OF WORK

A. Provide fire-rated plywood behind the aluminum panel cladding.

B. Provide wood blocking at roof edges and base of wall.

C. Provide wood blocking to raise mechanical equipment curbs.

D. Provide wood blocking at stair penthouse window openings.

E. Provide wood blocking to raise door at stair penthouse.

F. Provide wood blocking at change in roof height step.

G. Provide miscellaneous blocking and plywood as shown on Drawings.

1.03 RELATED WORK SPECIFIED ELSEWHERE

A. Section 02 5000 – Selective Removals

B. Section 04 2000 – Unit Masonry.

C. Section 07 3100 – Asphalt Shingle Roofing.

D. Section 07 5000 – Thermoplastic Membrane Roofing

E. Section 07 6000 – Sheet Metal Cladding and Flashing

F. Section 08 1000 – Metal Doors and Frames and Hardware.

1.04 SUBMITTALS

A. General: Refer to Division 1 for submittal provisions and procedures.

B. Certifications by the producers of the materials that all materials supplied comply with all the requirements of the referenced standards and that all materials are suitable for the use specified herein.

C. Manufacturer's product data and installation recommendations.

D. Samples of all fastening materials specified, each properly labeled.

E. Shop drawings showing method of attaching wood blocking, plywood decking, and infill construction to existing and new construction.

F. Safety Data Sheets (SDS) for all materials to be used.

1.05 WARRANTY

A. Guarantee all work under this Section in a document stating that if, within 2 years after the Date of Substantial Completion of the Work, any of the work of this Section is found to be defective or not in accordance with the Contract Documents, the Contractor shall, at its sole cost and expense, correct it promptly after receipt of a written notice from the Owner to do so, unless the Owner has previously given the Contractor a written acceptance of such condition. Also, state that the Contractor shall bear all costs incurred by the Owner, including reasonable attorney's fees, court costs, and expert witness and consultant fees, to enforce Contractor's compliance with the obligations of this Guarantee. The obligations of this Guarantee shall run directly to the Owner and its successors and assigns and may be enforced by the Owner and its successors and assigns against the Contractor, shall survive the termination of the Contract, and shall not be limited by conditions other than this Contract.

PART 2 – PRODUCTS

2.01 WOOD MATERIALS

A. Wood Blocking Lumber: Southern Yellow Pine; #2 grade or better. Lumber is generally specified in standard nominal dimensions; however, taper cuts will be required as shown on the Drawings.

B. Plywood: APA Exposure 1 rated sheathing to meet requirements of PS 1-07, made with southern yellow pine, 4 ft x 8 ft; 3/4 in. thick, unless noted otherwise on the Drawings or as necessary to match existing thickness for wood decking replacement.

C. Tapered Shims: Continuous red cedar bevel siding, Grade B or better.

D. Fire-Retardant Treatment: Required for all plywood behind aluminum cladding. Fire-retardant chemicals providing a flame spread of less than twenty-five per ASTM E84 extended 30 min. tunnel test; in accordance with Federal Specification TT-W-571 and AWPA Standards U1-UCFB, T1 (Section 8.8), P17 and U1H, (C20 for lumber, C27 for plywood), free of halogens, sulfates, chlorides, and ammonium phosphate; registered by the EPA as a wood preservative against termites and fungal decay. Provide accelerated test certifications stating that the chemicals are no more corrosive to metals than untreated wood.

E. All wood in contact with masonry, except cedar or fire retardant treated plywood, is to be preservative treated under pressure in a closed retort and kiln dried after

treatment (KDAT). Treatment to be ACQ (alkaline copper quatenary) – Type C by Osmose, Inc., or approved equal. CCA (chromated copper arsenate) treatment is NOT permitted, and CCA-treated materials are not permitted on the jobsite. The treatment used is to be stamped on each piece by the processor. Do not use solvents that can stain adjoining materials or will affect any roofing bituminous material.

2.02 FASTENERS

A. Fasteners: All fasteners shall be stainless steel unless noted otherwise.

1. For wood-to-wood connections (unless specified otherwise):

a. Annular ring nails in gauges as detailed or required, with length to provide a minimum of 1-1/4 in. embedment into the final piece receiving the nail points, except full depth into plywood.

b. Wood Screws: Wood screws in gauges as detailed or required.

c. Lag bolts: Stainless steel, 3/6 in. dimeter, in length as required to obtain full embedment into final piece of material.

2. For attaching wood to masonry: 1/4 in. dia. of sufficient lengths to penetrate 1-1/2 in. minimum.

a. Hilti Kwik-Con II, 410 Stainless Steel.

b. Powers Tapper, 304 Stainless Steel.

c. Elco Crete-Flex, 410 Stainless Steel

3. For anchoring wood blocking into concrete roof deck at the roof perimeter: Sleeve anchor with countersunk head, 3/8 in. dia. of sufficient length to provide min. 1 ¼ in. embedment into concrete.

PART 3 – EXECUTION

3.01 EXAMINATION

A. Examine and verify all conditions and dimensions at the site in consideration of the special conditions associated with alteration of existing construction and reconstruction. Notify the Engineer immediately of any inconsistency between the field conditions and the Contract Drawings. The Engineer will determine what modifications are necessary. Correct conditions that are detrimental to timely and proper completion of the Work.

B. Document and report to the Engineer all damaged construction (that will require repair) existing prior to start of the work.

3.02 GENERAL WORKMANSHIP

A. Store all wood prior to use by neatly stacking on wood cribbing and covering to protect from the weather. Use cribbing of sufficient height to maintain at least 3-1/2 in. height between wood stock and the ground or roof surface. Arrange wood stock and supporting cribbing in a manner so as to avoid distortion of wood. Cover with waterproof, opaque, tarpaulins with grommets along tarpaulin edges. “Cinch” grommetted edge of tarp around bottom of stockpile so that water drips from edge of tarpaulin without wetting any stock. Do not use any stock that has become wet.

B. Inspect each piece of stock prior to installation, sighting along the board edge for straightness. Do not use any stock with excessive twist, bow, cup, or warpage.

C. Cut wood straight and true. Generally, cut ends square except at mitered corners and edges. Install all components to provide a flush surface, without buckles or localized deviations from the intended plane. Shim components or plane finished pieces as required to provide a smooth, flush, planar surface at junctures between wood pieces. Where slope is required, provide continuous tapered shims at the base of the wood assembly to create uniform slope.

D. Do not use powder-actuated fasteners. Provide all hardware, including nails, screws, staples, bolts, straps, hangers, anchors, etc., as required for attaching wood to wood or any other material. Use a minimum of two fasteners per length of lumber, stagger anchors for wood pieces more than 4 in. wide and provide two anchors at the ends of each length.

E. Mill lumber as detailed to match adjoining elements to provide smooth transitions to adjacent surfaces and to provide slopes as shown on the Drawings. Blocking is shown as nominal size; provide sloped or tapered blocking and continuous cedar shims to match insulation thickness to provide finished details as shown.

F. Coordinate the work of this Section with the work of trades responsible for applying finish work and other items to the rough carpentry work. Furnish and install furring, blocking, and shims as required to make rough carpentry acceptable to these trades.

G. Provide framing of the sizes and spacing shown on the Drawings or, if not shown, comply with the recommendations of “Manual for House Framing” of the National Forest Products Association (NFPA). Do not splice structural members between supports.

H. Comply with all the relevant prescriptive requirements of the building code unless noted otherwise on the Drawings or in this Section.

I. Set carpentry to required levels and lines, with members plumb, true to line, cut, and fitted.

J. Fit carpentry to other construction; scribe and cope as required for accurate fit. Correlate location of furring, nailers, blocking, grounds, and similar supports to allow attachment of other construction.

K. Produce joints that are tight, square, true, and well nailed, screwed, or bolted with members assembled in accordance with the Drawings and with applicable codes and regulations.

L. Select and place lumber so that the best face is exposed to view when the work is completed. Do not use defective or damaged materials, such as cracked, split, warped, kinked, twisted, gouged, or severely dented lumber, regardless of how or where the defect or damage occurred. Do not use bent, cracked, or rusted connectors, regardless of how or where the damage occurred.

M. Small amounts of crook are allowed in the lumber grades specified herein. Install horizontally oriented members with the high-side “crown” up.

N. Do not use lumber with excessively large knots, loose knots, loose grain, excess wane, wood decay, or excessive machining defects.

O. Discard units of material that are too small to use with minimum number of joints or optimum joint arrangement.

P. Nailing Schedule: Conform to the State Building Code unless noted otherwise on the Drawings or in this Section. If splits occur at the ends of members when installing nails or other fasteners, then prebore holes to prevent splitting. Lead holes for nails shall not be larger than three-quarters of the nail diameter.

Q. Screw or bolt nailers as required to decks, walls, and parapets at spacing not over 12 in. o.c., and 8 in. o.c. at corners, unless shown otherwise on details.

R. Countersink fasteners into wood only to depth for bolt heads to be flush. Use flat-head bolts.

S. Securely nail other blocking and nailers at spacing not over 1 ft o.c., or as shown or required to prevent movement or uplift.

T. Where existing nailers are loose, or displaced, or do not meet the requirements of this Section for fasteners, add such fasteners as specified for new wood work.

3.03 PLYWOOD INSTALLATION

A. Install plywood panels with the long dimension across the supports and with the panel continuous over two or more spans. Stagger panel end joints and all panel end joints shall be supported on framing. Spacing of 1/8 in. is recommended at panel ends and edges unless otherwise indicated by the panel manufacturer.

B. Align the long dimension of plywood sheets transverse to the roof slope, and stagger end joints 2 ft minimum; maintain staggered joints between adjacent work areas.

C. Provide a smooth, level plywood surface by using cedar shim stock, additional plywood, or lumber, as required to correct minor offsets and variations in the existing decking.

D. Provide all fastener heads flush to the plywood surface. Gap all joints in plywood 1/8 in.

E. Provide plywood where detailed. Secure plywood with specified fasteners spaced at 6 in. o.c. along edges, studs, and blocking. Provide one fastener for every 1 sq ft in the field of the sheet. Locate fasteners minimum of 3/8 in. from edge. Install fasteners flush with face of decking.

END OF SECTION

SECTION 07-3100

ASPHALT SHINGLE ROOFING

PART 1 – GENERAL

1.01 GENERAL REQUIREMENTS

A. Drawings and general provisions of the Contract, including General and Supplementary Conditions and other Division 01 Specification Sections, apply to this Section.

1.02 SCOPE OF WORK

A. Provide self-adhered membrane underlayment at Lecture Hall eaves and below the new gutter. Integrate the self-adhered membrane underlayment with the existing roof membrane underlayment.

B. Provide asphalt-shingle roofing system to match existing.

C. Provide bird deterrent wire and post system at the asphalt shingle roof ridge and eaves. Integrate the posts with asphalt shingles; replace individual shingles at hip and ridge as required to integrate.

D. Alternate 2: Provide asphalt shingle roof system at Lecture Hall roof.

1. Provide membrane underlayment consisting of both self-adhered roof membrane and felt underlayment. Provide self-adhered membrane at eaves, hips, and ridges as shown on the Drawigns.

2. Provide asphalt shingle roof system.

1.03 RELATED SECTIONS INCLUDE THE FOLLOWING:

A. Section 02 5000 – Selective Removals

B. Section 02 8200 – Selective Hazardous Building Materials Abatement Demolition.

C. Section 02 8213 – Asbestos Abatement.

D. Section 02 8313 – Lead-Based Paint Awareness.

E. Section 02 8416 – Universal Waste Removal and Recycling.

F. Section 02 8432 – PCBs Greater than 50 PPM Remediation.

G. Section 06 1000 – Rough Carpentry.

H. Section 07 6000 – Sheet Cladding and Flashing

I. Section 07 9200 – Joint Sealants.

1.04 STANDARDS

A. Unless noted otherwise, comply with the following, except where these specifications are more stringent:

1. Asphalt Roofing Manufacturers Association (ARMA) “Residential Asphalt Roofing Manual,” 1992 or current addition.

2. National Roofing Contractors Association (NRCA) “The NRCA Roofing Manual: Steep-Slope Roof Systems” 2009.

3. ASTM International (ASTM): Standards as noted herein and as applicable to the materials and work specified.

4. Underwriters Laboratories Inc. (UL) 790.

5. Connecticut State Building Code, current edition, and referenced International Building Code.

1.05 PERFORMANCE REQUIREMENTS

A. Provide a complete new asphalt-shingle roofing system in accordance with these Specifications, meeting the following performance requirements:

1. Sufficiently watertight to prevent building leakage or wetting of structural components.

2. General Shingle Requirements: ASTM D3462.

3. Fire: UL 790 or ASTM E108, Class A.

4. Wind: ASTM D7158 Class G or H, or ASTM D3161 Class F. Miami-Dade Approved for wind speeds of 120 MPH.

1.06 SUBMITTALS

A. Provide the following submittals to the Engineer for review and approval in advance of the work:

1. Product Data: For each item specified or proposed for use on this project, submit literature, applicable safety data sheet (SDS), and test data substantiating that the product complies with specified requirements and applicable industry standards. Submittals shall including the following:

a. Asphalt Shingles: Certification by the manufacturer that the asphalt shingles provided comply with all the requirements of the appropriate ASTM standards and are suitable for use as specified in this Section.

2. Manufacturer’s written installation and handling instructions for storage, construction and application of shingles, felt underlayment, and the self-adhering-membrane system and components.

3. Shop Drawings: Provide complete drawings for each assembly and fabrication indicated, including components, materials, dimensions, etc., and specific listed requirements, details at 3 in. = 1 ft. scale, plans at 1/4 in. = 1 ft-0 in.

    a. Provide comprehensive coordinated shop drawings showing shingle, underlayment, and flashing assemblies. Include the following details:

        (1) Shingle attachment methods

        (2) Shingle layout plan (no straight-up applications)

        (3) Each detail shown on the Drawings, showing all proposed dimensions, including dimensions not shown on the Drawings

        (4) Any details not shown on the Drawings or where the Contractor proposes modifications

        (5) Gutter integration

    b. Provide shop drawings showing layout of bird deterrent wire system, including post locations, integration with asphalt shingles, and phasing with asphalt shingle installation.

4. Warranty samples.

5. Proposed work sequence, schedule, staging, and storage plans.

6. Samples: Provide samples of materials listed below that will become part of the final roof assembly:

    a. Shingle color samples showing the full range of color

    b. Fasteners

    c. Underlayments

7. Quality Control Documentation: Provide documentation showing that the items below meet the requirements for fabrication or installation as listed:

    a. Provide certification from the shingle manufacturer that the contractor is qualified to install the specified system.

8. Closeout: Provide the following upon substantial completion:

    a. As-built shop drawings.

    b. Executed warranties.

    c. Closeout documents (e.g., release of liens, affidavits of payment of suppliers and subcontractors) as required by the Owner.

1.07 QUALITY REQUIREMENTS

A. Conduct a quality control program that includes, but is not limited to, the following:

1. Inspection of all materials to ensure conformity to contract requirements and that all materials are new and undamaged.

2. Establishment of procedures for executing the work.

3. Inspection of all surface preparations prior to roofing application.

4. Inspection of work in progress to ensure that work is being done in accordance with established procedures, manufacturer's instructions, industry standards, and specific Engineer instructions, if given.

5. Inspection of all work completed, and correction of all defective work.

B. Manufacturer Qualifications:

1. A firm regularly engaged in producing roofing products that have been used for similar applications with successful results for at least 10 yrs.

C. Installer Qualifications:

1. The work of this Section shall be performed by a contractor acceptable to the Owner, and approved by the shingle manufacturer prior to bid.

2. The Contractor, the Contractor's superintendent, and foreman shall each have at least 5 years' experience successfully constructing shingle roofing systems similar to this project in material, design, and importance with a record of successful in-service performance.

3. Use only skilled mechanics thoroughly trained and experienced in shingle roofing installation and repairs, with the skills necessary to perform the work of this Section and completely familiar with the materials and methods specified herein.

D. Source Limitations:

1. Obtain roofing materials through one source from a single manufacturer throughout the project. Obtain shingles with appropriate batch and manufacturing runs to avoid color variations in the completed work.

2. Obtain bird deterrent wire system through one source from a single manufacturer through the project.

E. Regulatory Requirements:

1. Comply with all applicable local, city, state, and federal government regulations, including OSHA and environmental requirements, regarding use and installation of the roofing system.

F. Quality Assurance:

1. Installation of the asphalt shingles, eave and rake edge sheet metal flashing, and underlayments shall be the responsibility of the roofing contractor to ensure undivided responsibility.

G. Mockups:

1. At least 2 weeks prior to the start of roofing work, construct mockup samples where directed by the Engineer, as described below. Notify the Engineer at least seven days before construction of the mockups so that the Engineer may have a representative present during the construction of the sample. Do not start overall installation until the Engineer has approved the mockup.

2. Rebuild samples as many times as required to meet the Engineer's approval at no additional cost to the Owner or delay in the project schedule.

3. Approved mockups will establish both the technical and aesthetic qualities for the work and will set the standard for acceptance of workmanship, finish, color, and appearance.

4. Keep approved sample areas in a cleaned and finished condition throughout the duration of the project. Approved mockups may remain as part of the finished work if undisturbed at time of Substantial Completion.

5. Reproduce samples accurately in construction using identical materials and quality of workmanship.

6. Construct mockups as follows. Coordinate mockup installation in advance so that the Engineer can review multiple mockups during regularly scheduled site visits and will not have to make a special site visit for each mockup.

a. Install an in-place mockup of self-adhered membrane underlayment at one entire eave area, including full width of ice dam protection membrane and integration with the eave, sheet metal gutter, and hip. Notify the Engineer of Record when this mockup will be installed so the Engineer can observe the underlayment installation before shingles are installed.

b. Install an in-place mockup of asphalt shingles at the eave area, extending from eave to existing shingles or 5 ft. from the eave and for the width of two shingles. Include shingle integration with gutter and to existing shingles.

c. Install an in-place mockup of the hip cap shingles, including two cap shingles and the bird deterrent wire posts integration with the shingles.

H. Attend a preconstruction conference to be held with a representative of the Owner, Engineer, Contractor's field superintendent, site foreman, and the foremen of all

participatory trades to discuss practices applicable to this project and coordination within the project.

1.08 DELIVERY, STORAGE, AND HANDLING

A. Handle all materials to prevent damage. Store rolled goods on their ends only, except where recommended otherwise by the manufacturer. Discard rolls that have been flattened, creased, or otherwise damaged. Place materials on pallets. Use canvas tarpaulins (not polyethylene) to cover all stored materials, top to bottom. Store materials in original unopened containers. Protect all materials from exposure to moisture, direct sunlight, heat, sparks, flames, and any damage during storage. Volatile solvents can produce explosive and poisonous gasses; provide adequate ventilation and protection in storage areas.

B. Minimize breakage of shingles by avoiding dropping bundles on edge, by separating shingles carefully (not by “breaking” over ridge or bundles), and by taking extra precautions in temperatures below 40°F (4°C).

C. Handle carefully in hot weather to avoid scuffing the surfacing or damaging the shingle edges.

D. Roofing system components may be toxic or flammable. Heed all manufacturers’ cautions and warnings in regard to their storage and use.

E. Installed membranes are slippery, especially when hot, wet, or covered with frost; take the proper precautions to avoid slipping on membranes, underlayment, or plywood roof deck.

F. Packaging and shipping requirements.

G. Storage and protection requirements.

H. Do not exceed a uniform load of 30 lbs/sq ft with stockpiled material on the roof. Do not stack shingle bundles over one bundle high on the roof.

1.09 PROJECT CONDITIONS

A. If rain threatens during the workday, or in an emergency, provide temporary protection for the unfinished exposed roofing and flashing components.

B. Existing Conditions:

1. Field Measurements: Verify all dimensions by field measurement. Contract Drawings are based on original design drawings and may not represent actual as-built conditions.

C. Schedule Requirements:

1. Work in cooperation with other trades and Owner’s workers by the timely performance of the work. Coordinate with other trades to avoid traffic over

completed roofing. Complete flashing and counterflashing assemblies as the work progresses.

2. Remove only as much roofing as can be replaced and made watertight the same day. Remove existing roofing materials and nails carefully to avoid damage to the roof deck.

3. Arrange work sequence to avoid use of newly constructed roofing and flashing for storage, walking, and equipment movement. Move equipment and ground storage areas as the work progresses to avoid abuse of roofing.

D. Coordination Requirements:

1. Work in conjunction with other trades to provide the proper installation of flashings in a timely manner. Coordinate with other trades to incorporate masonry work, saw cutting, and counterflashing installations before the permanent installation of adjacent underlayment and roofing to avoid contamination or damage of completed assemblies.

1.10 WARRANTY

A. Alternate 2: Provide the shingle manufacturer's warranty, equal to the standard warranty offered by the shingle manufacturer for a minimum period of 30 yrs.

B. Bird Deterrent Wire and Post System: Provide 5 year manufacturer's warranty.

C. Guarantee all work under this Section in a document stating that, if within 2 years after the Date of Substantial Completion of the Work, any of the work of this Section is found to be defective or not in accordance with the Contract Documents, the Contractor shall, at its sole cost and expense, correct it promptly after receipt of a written notice from the Owner to do so. Also, state that the Contractor shall bear all costs incurred by the Owner, including reasonable attorney's fees, court costs, and expert witness and consultant fees, to enforce Contractor's compliance with the obligations of this Guarantee. The obligations of this Guarantee shall run directly to the Owner and its successors and assigns and may be enforced by the Owner and its successors and assigns against the Contractor, shall survive the termination of the Contract, and shall not be limited by conditions other than this Contract.

1.11 MAINTENANCE

A. Attic Stock: Provide one bundle of shingles for attic stock in the original unopened package and not exposed to high temperature during storage.

PART 2 – PRODUCTS

2.01 MATERIALS

A. Asphalt Shingles: Mineral-surfaced self-sealing asphalt fiberglass laminated ("architectural") strip shingles meeting or exceeding the performance requirement specified above.

1. Base Bid: Provide shingles to match existing. Existing manufacturer and color is not known.

2. Alternate 2: GAF Timberline HD or approved equal.

B. Precut Starter Strip with Factory-Applied Adhesive: By the approved shingle manufacturer.

C. Felt Underlayment: No. 30, unperforated, asphalt-saturated organic felt, ASTM D226, Type II, 36 in. wide.

D. Self-Adhered Membrane Underlayment: Provide the following products as manufactured by Grace Construction Products, or approved equal:

1. Typical Self-Adhering Membrane: 0.040 in. thick self-adhering rubberized asphalt adhesive with a polyethylene laminate integrally bonded on one side, complying with ASTM D1970; Grace Ice & Water Shield HT.

2. Self-Adhered Membrane Underlayment Ancillary Products:

a. Bituthene Primer B2 LVC

E. Fasteners:

1. Asphalt-Shingle Attachment: 11 or 12 ga sharp pointed conventional roofing nails with barbed shanks, minimum 3/8 in. flat head and 1-1/4 in. shank.

a. Field of the Roof: Aluminum or hot-dipped galvanized steel.

b. Where Fastening through Metal Flashing Flanges: Match metal flashing material.

2. Felt Underlayment Attachment: Cap nails.

3. Wood Screws: Refer to Section 06 1000.

F. Bird Deterrent Wire System: Post and wire system with spring loaded wire. Provide system from a single manufacturer that is specifically designed to deter bird landing.

1. Wire: Nylon coated stainless steel seven-stranded wire.

2. Crimps: Nickle plated copper.

3. Springs: Stainless steel.

4. Ridge Bracket: Three post stainless steel bracket designed for mounting on ridges and hips. Minimum 3.5 in. post with eyelet for wire.

5. Sheet Metal Straps and Rivets: 2 in. wide straps, length as required. Refer to requirements in Section 07 6000.

PART 3 – EXECUTION

3.01 EXAMINATION

A. Examine all surfaces scheduled to receive roofing, underlayment, flashing, and shingles for roughness, contaminants, unsound structural substrates, or other conditions that may impair the roofing application. Provide smooth, clean roofing substrates free of defects such as loose deck, holes, uneven surface, and protruding fasteners. Promptly notify the Engineer and Owner in writing of any such conditions; do not commence work until all defects are remedied.

B. Verify all site conditions and dimensions by field measurements in consideration of the special conditions associated with alteration of existing construction and reconstruction. Notify the Engineer immediately of any inconsistency between field conditions found during demolition and those shown in Contract Drawings. The Engineer will determine what modifications or additional repairs are necessary.

3.02 PROTECTION

A. Protect the existing buildings, contents, interior finishes, and site during all demolition, removal, and reconstruction operations against all risks associated with this work. Coordinate this work with the other trades and the protection requirements in other Sections.

B. Protect building occupants and pedestrians from all risks associated with this work. Erect fencing and barricades to keep pedestrians out of work areas at all times.

C. Protect new roofing during the work specified in this Section and coordinate protection by other trades. Immediately repair any damage to the roofing as a result of the work in this Section at no additional cost to the Owner, by approved means.

3.03 PREPARATION

A. Remove all dirt and debris from surfaces scheduled to receive underlayment and roofing. Do not apply the permanent roofing materials unless the exposed surface of the substrate is clean, smooth, and dry.

3.04 INSTALLATION OF SELF-ADHERED MEMBRANE UNDERLAYMENT

A. Apply the self-adhered membrane underlayment and all ancillary products in compliance with the manufacturer’s printed instructions unless modified by this Section.

B. Prime all surfaces to receive self-adhered membrane underlayment. Apply primer only to the area to be covered by membrane underlayment that workday. Apply the primer with a roller or brush at the minimum rate of 1 gal per 250 sq ft; do not spray the primer. Allow the primer to dry until tack free.

C. Install self-adhered membrane underlayment at eaves, ridges, hips, and at all metal flashing as described herein and as indicated on Drawings.

1. Apply over primed substrates. Begin application of sheets at eaves and work up slope so all components and laps shed water; overlap the sheets a minimum of 6 in. at the ends and a minimum of 3-1/2 in. at all side laps. At valleys, provide 6 in. minimum end lap between all sheets. Seal all seams in the membrane watertight.

2. Apply sheets in longest lengths practical; shingle side laps and step end laps so they do not buck water, except where physically unavoidable (i.e., where the valley sheet crosses the eave sheet). Do not apply mastic where it will be covered by membrane. Roll out the sheets on primed surfaces and align. Reroll one-half of the sheet in its long direction and cut the release paper, taking care not to cut the membrane.

3. Roll the membrane underlayment onto the primed surface while pulling the release paper in front of the roll such that once the release tape is removed, the membrane underlayment is immediately adhered to the primed surface.

4. Place sheets without fishmouths and wrinkles. If fishmouths and wrinkles occur, cut out and flatten the affected area. Cover the area with a self-adhered-membrane-underlayment patch extending a minimum of 6 in. beyond the cuts on all sides.

5. Immediately after applying the self-adhered membrane underlayment to the primed surface, hand press it into contact with the primed surface and roll the entire sheet toward the lap seams with a handheld neoprene roller to eliminate air pockets. Remove any air pockets that remain and patch as described above. Create a uniform and complete bond.

6. Construct the Self-Adhered Membrane Underlayment mockup. Once the mockup is approved, notify the Engineer of Record when self-adhered membrane underlayment will be installed throughout the remainder of the roof, so the Engineer can observe the underlayment installation before shingles are installed. Do not install shingles until Engineer has observed self-adhered membrane underlayment throughout the entire roof.

D. Install self-adhered membrane underlayment flashings as described herein and as indicated on the Drawings.

1. Round or chamfer all outside corners; ensure that corners are smooth and free of sharp protrusions. At inside corners as shown on the drawing details, trowel-apply a 3/4 in. fillet of liquid membrane into corners and allow it to cure.

2. At all inside and outside corners, provide a 12 in. wide reinforcing strip of the membrane centered over the transition. Form smooth transitions. Do not bridge the membrane at inside corners.

3. Where pinholes exist at curb corners, provide mastic over the final layer of membrane. Do not apply mastic where it will be covered by membrane.

4. Lap the self-adhered membrane underlayment over membrane and eave edge metal, and upslope edges of other metal flashings.

3.05 INSTALLATION OF FELT UNDERLAYMENT

A. Begin application of felts at bottom of slope and work up the roof slope and secure with fasteners; install the felts horizontally over the exterior sheathing, parallel to the eaves. Install successive courses in shingle fashion, lapping the upper course over the lower course 4 in. minimum. Lap vertical joints at end laps 12 in. minimum and stagger end laps 48 in. minimum. Overlap the self-adhering membrane underlayment 6 in. at eaves and work upslope. Overlap the self-adhering membrane underlayment 12 in. at valleys. Use only enough fasteners to hold the felt in place prior to installing shingles. Repair any holes or tears in the felt with roofing cement and felt.

3.06 INSTALLATION OF ASPHALT SHINGLES

A. Begin shingles with a precut starter strip. Attach the starter strip with the adhesive side up at the eave edge. Overhang the metal eave and rake edge metal by 3/8 to 1/2 in. and offset butt joints in the succeeding course. Locate the starter course fasteners 3 in. from the eave edge.

B. Snap horizontal and vertical chalk lines to provide proper alignment and the manufacturer's recommended (5-5/8 in.) exposure. Stagger butt joints in succeeding courses diagonally; do not apply staggered joints in a straight-up manner. Apply the shingles using the 6 in. stepped-off diagonal method.

C. Fasten each shingle and starter as recommended by the manufacturer but not less than four nails per shingle located as recommended by the manufacturer. Staples are not permitted.

D. Nails must be driven flush with the shingle surface. Do not over drive or under drive the nails.

E. If cold weather prevents shingle adhesion, hand seal with specified adhesive cement as recommended by the manufacturer.

3.07 INSTALLATION OF BIRD DETERRENT WIRE

A. Install brackets and posts at the asphalt shingle roof ridge and hip with maximum 5 ft. spacing.

1. Begin installation at areas with new asphalt shingles. Install shingle course below bracket location. Fasten top edge of stainless steel straps though top of shingle into the roof deck with two screws. Install the straps at both sides of ridge, 1 in. from the top of the ridge. Continue installation of shingles above, overlapping the strap fastener with the shingle while leaving the bottom of the strap exposed.

2. At existing shingles, lift the shingle above the bracket location, install the stainless steel straps and fasten to the roof deck as described above, and cover the fastener penetration with asphalt roofing mastic.

3. Rivet the ridge bracket to both stainless steel straps with two rivets per strap.

B. The wire should be installed in 10 ft. long sections consisting of posts at each end and one center post. The wire is attached to an end post, passes through the center post, and is attached to a spring at the other end post.

1. Thread the wire through a crimp, the eyelet of the end post, back through the crimp, and crimp the wire secure.

2. Pass the wire through the eyelet of the center post.

3. Thread the wire though a crimp, a closed spring, back through the crimp.

4. Attach the spring to the eyelet of the other end post and close with plyers.

5. Pull the wire taut and crimp secure. Repeat for all posts.

3.08 CLEANING

A. Remove and dispose of all construction debris daily in an appropriate manner.

END OF SECTION

SECTION 07-5000

THERMOPLASTIC MEMBRANE ROOFING

PART 1 – GENERAL

1.01 GENERAL REQUIREMENTS

A. Drawings and general provisions of the Contract, including General and Supplementary Conditions and other Division 01 Specification Sections, apply to this Section.

1.02 SCOPE OF WORK

A. ROOFTOP EQUIPMENT:

1. Coordinate roofing work with modifications to mechanical unit supports and steel platform (Section 05 5000 – Miscellaneous Metals) to raise equipment, decks, etc. to have a min. 8 in. of flashing height from the top of the new roofing system. Coordinate with required disconnects in Section 02 0500 – Selective Removals.

2. Reinstall all equipment when work is complete; provide extended duct work, pipes, conduit, electric wires and associated insulation. Providing replacement screws for the existing mechanical equipment panels if they are missing.

B. MAIN BUILDING ROOF:

1. Provide new PVC membrane roofing system. Include accessories and membrane flashing at all roof penetrations and rising walls, metal flashing. This system will include the following:

   a. Self-adhered vapor retarder.

   b. Flat and tapered rigid insulation to provide a minimum 1/4 in./ft. slope roof to drains and minimum insulation R-value of R-30.

   c. 1/2 in. cover board, adhered to insulation boards and mechanically attached to the concrete deck

   d. Adhered single-ply PVC roof membrane including all flashing, sealants, and accessories required for a complete roofing system.

   e. Flashing for all roof penetrations and perimeter details.

   f. Walkway protection pads.

2. Provide new roof drains at existing locations shown on the Drawings. Integrate with new membrane roofing system. Inspect the existing pipes for

blockage and debris. Connect new drain to existing plumbing. Repair existing concrete deck around the drain.

3. Provide weighted guardrail system.

4. Provide TPO flashing membrane and TPO-clad metal over the edge of the existing TPO roof system at the north east corner. Coordinate with metal cladding installation (Section 07 6000 – Sheet Metal Cladding and Flashing).

C. ALTERNATE 1: STAIR ROOFS (STAIR PENTHOUSE, LOWER EAST ROOF, LOWER WEST ROOF)

1. Inspect the concrete deck for damage and repair damaged concrete. Notify the Engineer if any existing concrete deck damage extends to the existing reinforcing bars.

2. Provide PVC membrane roofing system, including vapor retarder, rigid insulation, tapered rigid insulation, cover board, insulation fasteners and plates, and adhered PVC membrane. Include accessories, membrane and metal flashing at rising walls and roof edge.

D. GENERAL

1. Construct mockups as specified. Coordinate with mockups required in other sections.

2. Complete field tests of fastener pull-out strengths as required by this Section.

3. Assist with wind uplift resistance testing of the completed roof assembly (FM Global Data Sheet 1-52, Field Verification of Roof Wind Uplift Resistance) as required by this Section.

1.03 RELATED WORK SPECIFIED ELSEWHERE

A. Section 02 5000 – Selective Removals

B. Section 04 2000 – Unit Masonry.

C. Section 05 5000 – Miscellaneous Metals

D. Section 06 1000 – Rough Carpentry.

E. Section 07 6000 – Sheet Metal Cladding and Flashing.

F. Section 08 1000 – Metal Doors and Frames and Hardware.

1.04 REFERENCE STANDARDS

A. In general, follow recommendations and procedures of the following standards and publications, except where these Contract Documents (project specifications and drawings) are more stringent:

1. National Roofing Contractors Association (NRCA):

    a. NRCA Roofing Manual.

2. 2018 Connecticut State Building Code

1.05 SUBMITTALS

A. Submit the following items for the Engineer in time to prevent delay of the project and to allow adequate time for Engineer's review and resubmittals, if needed. Do not order materials or start work before receiving the Engineer's written approval.

1. Provide procedures and detail drawings for all temporary protection measures, including protection from weather-related damages, required to complete the scope of work indicated in the Drawings and Specifications. Exterior and interior building components to be protected include, but are not limited to, adjacent buildings, windows, roofing, masonry, landscaping elements, and utilities.

2. PVC Roofing Contractor Qualifications:

    a. The Contractor performing the work under this Section must have a minimum of 5 years of experience in comparable work and must submit a list, with references, of three buildings on which it worked in the last 5 years, employing workers skilled in the installation of PVC membrane and other operations indicated.

    b. List building name and address, architect or engineer, general contractor, and appropriate subcontractors with phone number and contact person.

3. Product Data:

    a. Manufacturer's literature for all materials specified or proposed for use on the Project, properly labeled and referenced to the appropriate Specification Section.

    b. Safety Data Sheets (SDSs) for each material where appropriate.

    c. Letter from the manufacturer of the roofing system confirming that the proposed new roofing system will meet the specified performance requirements for wind-uplift resistance.

4. Samples: For all component materials specified or proposed for use on the project, properly labeled and referenced to the appropriate Specification Section.

5. Shop Drawings:

    a. Provide roof insulation shop drawings. Plans shall show drain, penetrations, the layout of the tapered insulation, including location of

crickets and typical insulation cross-sections. Show thickness of the tapered roof insulation at roof perimeters, curbs, penetrations, and high points. Indicate slope of tapered insulation in the field of the roof and at tapered crickets. Show average and minimum R-value of the insulation system on the plan.

b. Shop drawings of all membrane and metal flashing showing exact profile, lengths, joints, terminations, and methods of attachment; include details for repairs of, and additions to, existing materials.

c. Guardrail layout and detailed shop drawings.

d. Walkway pad layout

6. A copy of the Roofer's 2-year warranty for the Owner's review and approval.

7. Copies of the roofing system manufacturer's 20-year extended warranties for review by the Owner.

8. Letter from the manufacturer of the roofing system certifying that the proposed new roofing system is eligible for the manufacturer's 20-year roof system warranty.

9. FM Global Form 2688, "Checklist for Roofing System", completed by the Roofer listing all specified and proposed materials, for submission to FM Global.

10. Results of the cover board fastener pull-out tests and membrane adhesion test as described in Section 1.12. Perform a minimum of three fastener pull-out tests on all substrates. Perform additional pull-out tests as required by Designer, or manufacturer's representative.

11. Calculations for the guard rails to determine the required layout and ballast weights to for the wind load.

1.06 PROTECTION

A. Deliver all materials in manufacturer's unbroken containers.

B. Keep all materials dry while transported, stored, and delivered. Do not allow materials to be exposed to moisture at any time, and promptly remove exposed materials from the site.

C. Store all materials on pallets and cover with canvas tarpaulins (not polyethylene), top to bottom. Store in a secure area on the ground; do not store materials on the roof. Unvented polyethylene tarpaulins are not accepted due to the accumulation of moisture beneath the tarpaulin in certain weather conditions that may affect the ease of membrane weldability.

D. Handle all materials to avoid damage. Store rolled goods (except PVC) on ends only. Discard rolls that become flattened, creased, or otherwise damaged. Promptly remove from site any materials rejected by the Owner's Representative.

E. Do not dilute primers, roofing cements, adhesives, coatings, or sealants. Keep containers closed except when removing materials from them.

F. Protect the existing building, building occupants, building contents, landscaping, and site work against all risks associated with this work. Repair or replace any damage to the satisfaction of the Owner at no additional cost to the Owner.

G. Provide all necessary temporary protection needed to prevent leakage into the building at any time during this project.

H. Do not use new roof surfaces for storage or work areas. Protect new and existing roof surfaces with smooth 5/8 in. thick (at a minimum) plywood runways where access is absolutely required, and ensure full protection of new and existing roofing surfaces against mechanical damage. Move equipment and ground storage areas as work progresses to avoid abuse of roof. Notify the Owner's Representative immediately and in writing if anyone abuses or damages roofing or flashing components. It is the roofing contractor's responsibility to protect the newly installed roof from other trades working above.

I. During the period of the conduct of the work, make a representative reasonably available by phone for emergencies. Phone numbers shall be made available to the Owner's Representative prior to the start of work.

J. Provide temporary seals from new roof to existing roof and to the roof deck at the end of each day's work. Such seals shall prevent moisture penetration into the building, under the existing roof membrane, or under the new membrane.

1.07 QUALITY ASSURANCE

A. The roofing system and installation shall comply with the requirements of the 2018 Connecticut State Building Code.

B. Fire-Test-Response Characteristics: Provide roofing materials with the fire-test-response characteristics indicated as determined by testing identical products per test method below by UL, FM Global, or another testing and inspecting agency acceptable to authorities having jurisdiction. Materials shall be identified with appropriate markings of applicable testing and inspecting agency.

1. Exterior Fire-Test Exposure: Class A; ASTM E108, for application and roof slopes indicated.

2. Internal Fire Rating: FM Global Class NC

C. Manufacturer's Field Representative: The Contractor shall arrange with the roofing manufacturer to have the services of a competent field representative at the site to approve surface preparation before installation of roofing materials. The Field Representative shall instruct the crew on proper installation of materials and observe

the installation of the roofing membrane at the beginning of the work. The Field Representative shall issue written reports of his/her findings and recommendations to the Owner and Engineer. The Field Representative shall remain at the jobsite and continue to instruct until the representative, Engineer, and Owner are satisfied that the crew has mastered the technique of installing the system successfully.

D. Attend weekly job meetings during the course of construction of the work or as required by the Owner or Engineer.

E. Contractor shall assist Engineer's consultant to perform wind uplift resistance testing of the completed roof assembly according to FM Global Data Sheet 1-52, Field Verification of Roof Wind Uplift Resistance. Contractor shall move consultant's testing equipment to each test location, and make and repair exploratory openings into roof system as required by consultant.

1.08 PRECONSTRUCTION CONFERENCE

A. Attend a preconstruction conference to be held with representatives of the Owner, the Contractor, the Engineer, and all other trades to discuss the work covered under this Section. Review methods and procedures related to removal work, temporary shoring requirements, sequencing and coordination with other trades, protection from damage, etc.

1.09 PERFORMANCE REQUIREMENTS

A. The roofing system, in combination with adjacent construction, shall provide a fully watertight system.

B. Flashing: Provide base flashing, perimeter flashing, detail flashing, and component materials that comply with requirements and recommendations in FM 1-49 Loss Prevention Data Sheet for Perimeter Flashing, FM 1-29 Loss Prevention Data Sheet for Above Deck Roof Components, NRCA Roofing and Waterproofing Manual for Construction Details, and SMACNA Architectural Sheet Metal Manual for construction details as applicable.

C. Agency Approvals: The opposed roof system shall conform to the following requirements. No other testing agency approvals will be accepted.

1. Underwriters Laboratories UL Class A acceptance of the proposed roofing system without additional requirements for gravel or coatings.

2. Factory Mutual Approval Standard 4470 listing for the proposed membrane system. The roof membrane configuration shall be approved by FM Global for Class 1-SH (severe hail) exposure. The roof shall be approved by FM Global for minimum wind uplift construction 2x design pressure.

D. Design is in accordance with the 2018 Connecticut State Building Code, and must resist wind-uplift loads equal to the following:

1. Ultimate Design Wind Speed: 145 MPH

2. Wind Importance Factor: 1.15

3. Wind Exposure Class: D

4. Wind Velocity Pressure: 61 PSF

E. Factory Mutual Rating: The entire roof assembly (including vapor retarder, tapered insulation, cover board, and membrane system) shall qualify for the following Factory Mutual (FM) Assembly Wind Ratings:

1. Zone 1 (Field of Roof): FM I-105

2. Zone 2 (6 ft Width at Roof Perimeter): FM I-180

3. Zone 3 (6 sq ft Section at Roof Corners): FM I-270

1.10 PERFORMANCE REQUIREMENTS – ELECTRICAL AND MECHANICAL WORK

A. Request inspections from authorities having jurisdiction, and obtain all permits as applicable and/or required.

B. Unless otherwise specified or indicated, materials and workmanship and equipment performance shall conform with the latest edition of the following standards, codes, specifications, requirements and regulations:

1. State Building Code

2. State Electrical Code

3. National Fire Protection Association (NFPA)

4. Local Town Regulations and By-laws

5. Underwriter's Laboratories, Inc. (UL)

6. National Electrical Manufacturer's Association (NEMA)

7. American National Standards Institute (ANSI)

C. The arrangement of all electrical and mechanical work shown on the Drawings is diagrammatic only. Conditions at the building including actual measurements shall determine the details of the installation. All work shall be laid out and installed so as to require the least amount of cutting and patching, to limit penetrations to flashings, and to meet code requirements.

D. All work to be performed by licensed mechanic in the appropriate trade.

1.11 MOCKUPS

A. Notify the Engineer at least 48 hours before installation of the membrane roofing begins so that a representative may be present during construction. Each initial

installation of the conditions identified in Para. 1.09.B will serve as a mockup. Mockup must be large enough to show all typical conditions.

B. Construct a full-scale mockup of the PVC roofing elements identified below. Mockups may be constructed on the building and, if approved, may remain in place as part of the permanent construction:

1. 10 LF of roofing integrating with Lecture Hall rising wall

2. 10 LF of roofing edge detail

3. One penetration with reinforced liquid-applied flashing

4. One multi-pipe penetration detail

1.12 TESTING

A. Conduct (or arrange for) fastener pull-out tests to be performed in the existing roof decks. Submit the results of the fastener pull-out tests to the Engineer for approval in advance of the work. Conduct a minimum of three tests on each fastener type in each substrate proposed for use on the project. Make all necessary temporary openings and repairs needed to perform the tests.

B. Perform adhesion test of new vapor barrier to all substrates for approval in advance of the work. The Engineer must be present. Provide at least 48 hours' notice.

C. Engineer's consultant will perform wind resistance uplift testing of the completed roof assembly. Refer to Section 1.07.

1.13 PROJECT CONDITIONS

A. Environmental Requirements:

1. Roofing and waterproofing system components may be toxic and flammable. Heed all manufacturer's cautions and warnings regarding their use. Completed membrane is slippery when wet or frost covered. Take proper precautions.

2. Contaminants, such as grease, fats, oils, and solvents, shall not be allowed to come into direct contact with the roofing membrane. Any such contact shall be reported to the Engineer.

3. Take necessary precautions when using adhesives around air intakes. The smell of the adhesive could be a disturbance to the Building Owner and occupants. Coordinate equipment to be turned off and on with the Owner as needed.

4. Install membrane roofing within the range of ambient and substrate temperatures recommended by the roofing manufacturer. Do not apply waterproofing to a damp or wet substrate and do not apply waterproofing in snow, rain, fog, or mist or when these weather conditions are expected.

B. Maintain the building in a watertight condition at all times during construction.

C. Remove only as much existing roofing and flashing as can be made watertight the same day with either the new membrane system or a temporary waterproof membrane. All seams shall be heat-welded before leaving the jobsite that day.

D. Maintain adequate ventilation during preparation and application of waterproofing materials.

E. Cover vents, windows, and other locations as needed to protect occupants and public from fumes.

F. Verify all site conditions and dimensions by measurements in the field. Verify existing construction in consideration of the special conditions associated with working in, repairing, and modifying an existing building.

1. Notify the Engineer immediately of any inconsistencies between field conditions and those shown in the Contract Drawings. The Engineer will determine what modifications or additional repairs are necessary.

2. Plans and dimensions under which the work is to be performed are based on the available drawings of the existing conditions and are presented for information only. No additional compensation or time extension will be made for dimensional errors or discoverable inaccuracies about existing conditions in the Contract Documents.

G. Weather Limitations: Proceed with installation only when existing and forecast weather conditions permit the waterproofing system to be installed according to manufacturer's written instructions and warranty requirements.

H. Remove all tools, buckets, and materials from work areas and store neatly at a central location daily at the end of work.

I. Do not stockpile materials, debris, or equipment on the roof.

J. Deliver materials clearly marked with legible and intact labels with manufacturer's name and brand name, identifying contents of containers.

K. Store materials in areas where conditions conform to manufacturer's recommendations and instructions.

L. Protect the building and its contents from all risks associated with the work in this Section. Schedule and execute all work without exposing adjacent building areas to water, dust, debris, or materials used by this Contractor. Protect adjacent areas from damage and stains with appropriate barriers and masking. Repair all damage that results from the work of this Section to its condition at the start of work or, if such cannot be determined, to its original condition. Clean all stains by approved means.

M. Compliance with OSHA and all other safety laws and regulations is the exclusive responsibility of the Contractor, its Subcontractors, suppliers, and consultants.

N. Follow the approved dust- and fume-control plan.

1.14 WARRANTY

A. Guarantee all work under this Section in a document stating that if, within 2 years after the Date of Substantial Completion of the Work, any of the work of this Section is found to be defective or not in accordance with the Contract Documents, the Contractor shall, at its sole cost and expense, correct it promptly after receipt of a written notice from the Owner to do so, unless the Owner has previously given the Contractor a written acceptance of such condition. Also, state that the Contractor shall bear all costs incurred by the Owner, including reasonable attorney's fees, court costs, and expert witness and consultant fees, to enforce Contractor's compliance with the obligations of this Guarantee. The obligations of this Guarantee shall run directly to the Owner and its successors and assigns and may be enforced by the Owner and its successors and assigns against the Contractor, shall survive the termination of the Contract, and shall not be limited by conditions other than this Contract.

B. Provide the roofing system manufacturer's 20-year extended warranty on all labor and materials on the roofing system as part of the Bid Set. The roof warranty shall cover wind speeds, including hurricanes, up to and including 120 mph. The Bid Set includes all necessary materials, special details, and upgrades for the system to be eligible for the warranty.

PART 2 – PRODUCTS

2.01 MANUFACTURERS

A. The basis of design is a fully warranted PVC membrane roof system by Sika Sarnafil.

B. Manufacturers' products and specifications are generally referred to for identification; the products of other manufacturers meeting the specifications and standards of the specified systems may be submitted for review. The burden of proof for equal materials is on the Contractor, who shall bear the costs and delays involved in the Engineer's review of substitutions.

2.02 ROOFING MATERIALS

A. PVC sheet roofing system and all associated flashings and accessories are to be produced by Sika Sarnafil. Note: All components of the roofing and insulation system shall be by Sika Sarnafil as required to be eligible for the manufacturer's warranty and to meet the specified wind-uplift-resistance requirements.

1. Roofing Membrane: PVC roof membrane with plasticizers and other modifiers, formed into flexible sheets with fiberglass reinforcing conforming to ASTM D1204, Sarnafil G410, 60 mils thick; color, white.

B. Cover Board: 1/2 in. thick fiberglass-mat-faced board (top surface treated with sizing agent) with noncombustible moisture-resistant gypsum-core panel conforming to ASTM C208. Minimum compressive strength of 500 psi. Select product as

recommended by roofing membrane manufacturer to receive required system rating and warranty, DensDeck Prime by Georgia Pacific or approved equal.

C. Insulation: Tapered to provide minimum 1/4 in./ft. slope to drain, minimum R-value of 30, with fiberglass-reinforced glass facers. Minimum R-value per inch of 6 as provided or approved by Sarnafil.

1. Base Layer: Rigid glass-fiber-faced isocyanurate foam insulation boards. 1-1/2 in. thick boards. Do not use boards more than 1-1/2 in. thick. Minimum compressive strength of 25 psi.

2. Tapered Insulation: Isocyanurate insulation with fiberglass-reinforced facers. Minimum compressive strength of 25 psi; tapered 1/4 in./ft., as needed to achieve total slope of 1/4 in./ft, per approved tapered insulation plan.

3. Insulation for Voids and Multi-pipe Penetration Box: Mineral wool.

D. Vapor Retarder: 32 mil, self-adhesive vapor retarder, composed of SBS-modified bitumen and polyethylene woven composite facer, such as Sarnavap-Self Adhered with 0.017 perm, or approved equal.

1. Primer for Vapor Retarder: Solvent-based primer for use on concrete decks, such as Sarnavap self-adhered primer by Sika Sarnfil.

E. Adhesive for Membrane and Flashing: Sarnacol 2121 Adhesive.

F. Adhesive for Anchoring Coverboard to Insulation: Board adhesive, Olybond 500 or Sarnacol OM adhesive.

G. Anchor Plate for Anchoring Insulation and Cover Board to Roof Deck: Sarnaplate by Sika Sarnafil

H. Batten Bar for Anchoring Edge of PVC Membrane to Roof Deck: 14 ga stainless steel metal bar, 1 in. wide, prepunched bar stock, Sarnabar by Sarnafil.

1. PVC cord: Sarnacord PVC membrane, 5/32 in. diameter, red flexible extrusion used against the side of Sarnabar

I. Termination Bar for Anchoring Membrane to Roof Deck around Penetration: Sarnastop by Sarnafil.

J. Fasteners for Anchor Plates, Batten, and Termination Bars: length as required to ensure minimum 1-1/2 in. embedment into substrate concrete and wood blocking, or greater if required by the manufacturer.

1. Sarnafastener–XP by Sika Sarnafil

2. CD-10 by Sika Sarnafil.

K. Flashing Membrane:

1. Membrane Flashing Sheet: Glass-fiber-reinforced PVC, asphalt-resistant membrane, Sarnafil G459; color, white.

2. Reinforced Liquid-Applied Flashing: Two-component polymethyl methacrylate-based (PMMA), including catalyst, fleece and primer.

3. PVC Prefabricated Corner Reinforcements: Sarnacorner Universal by Sika Sarnafil.

4. Circular Membrane Patch for Use at T-joints: Sanacircle, 0.048 in. thickness by Sika Sarnafil.

L. PVC-Clad Metal Flashing: PVC-coated heat-weldable sheet metal, Sarnaclad, 24 ga, galvanized steel metal sheet with a 20 mil (0.5 mm) Sika Sarnafil membrane laminated on one side.

1. Cleats: 22-gauge galvanized steel.

M. Membrane Cleaner: As recommended by Sika Sarnafil for cleaning surface of PVC membrane at area of hot-air welds.

N. Roof Walkway Protection Pads: 96 mil. reinforced PVC membranes with “chevron” design, Sarnatred V by Sarnafil.

O. Sealant for Flashings and Drains: One-part urethane, Sikaflex 1A, by Sika Sarnafil.

P. Roof Drains: Z121, 12 in. diameter roof drain by Zurn Industries, or approved equal. Drain to be galvanized cast iron body and dome, no hub connection, with adjustable extension collar to raise dome height. Provide drain with pipe size diameter to match existing; verify existing pipe dimensions in field.

1. Neoprene for no-hub connection

Q. Hose Clamp: Stainless steel, worm-driven hose clamp, size as required.

R. Fasteners for Base Flashing: Simplex zinc-coated annular-threaded shank, with integral round caps, length sufficient to penetrate nailers a minimum of 1-1/4 in., except full penetration into plywood.

S. Foil Tape: aluminum tape with adhesive on one side

T. TPO Roof Membrane:

1. TPO Membrane flashing, 60 mil

2. TPO-Clad Metal Flashing

U. EPDM Roof Flashing: Provide EPDM membrane, adhesives, primers, and all accessories listed below and as recommended by the manufacturer. Firestone Building Products are referenced below. All roofing system components must be from the same manufacturer.

1. Splice Tape

2. Strip Flashing

3. Lap Sealant

4. Primer or Bonding Adhesive

V. Non-penetrating Weighted Guardrails: Two-rail guardrail system for use in high wind regions with weighted base plates and additional ballast arm attachment to each base plate to withstand wind loads. Color as selected by the Owner. Acceptable manufacturers include:

1. Garlock Safety Systems.

2. The Safety Rail Company

3. Approved equal

2.03 ELECTRICAL AND HVAC MATERIALS

A. Provide all necessary equipment including conduit, connectors and couplings, outlets, junction and pull boxes, wiring, sheet metal ducks, and fasteners.

PART 3 – EXECUTION

3.01 EXAMINATION

A. Notify the Engineer in writing of any discrepancies between the Drawings and field conditions. Do not start work until all discrepancies have been resolved.

B. Roof deck surface must be dry, clean, smooth, and intact. Do not start work until the deck surface and blocking are satisfactory for roof application.

C. Inspect existing roof deck for damage. If deteriorated deck is discovered, stop work and immediately report the condition to the Engineer.

3.02 REINSTALLATION OF ROOF-MOUNTED EQUIPMENT

A. Perform mechanical and electrical work using licensed mechanics, for necessary d reinstallation of rooftop equipment. Provide the Owner with reasonable advanced notice of shutdowns and conform to scheduling requirements of the Owner. Coordinate with removal in Section 02 0500 – Selective Removals.

B. Coordinate work to allow roofing reconstruction to proceed unimpeded, and replace mechanical equipment and reconnect electrical lines promptly after roofing work is complete.

C. The Contractor’s Superintendent shall be on site when equipment is being removed, replaced, or reinstalled on the roof.

D. Extend ducts and services to match existing, wherever needed to provide proper operating conditions for all units that have been raised.

E. Reinstall and reconnect all electrical power and control wiring.

F. Reinstall all mechanical work. Start up and verify the operating condition of all mechanical equipment that was disconnected and submit a written report to the Owner. Correct any deficiency that was not reported before removal at no additional cost to the Owner.

G. Replace all equipment panel fasteners, connections, and clips. Provide new fasteners where existing fasteners are damaged or missing.

3.03 ROOFING GENERAL WORKMANSHIP

A. The roofing system and workmanship shall be in accordance with the roofing system manufacturer's most-recent recommendations and specifications and shall be in accordance with the recommendations of the NRCA Roofing and Waterproofing Handbook, latest edition, except as modified herein.

B. Remove only as much of the existing roofing as can be replaced and made watertight during the same workday. Dispose of all rubbish in a legal manner off the site. Conduct debris to trucks or approved containers on the ground; do not throw debris from the roof. Use specific locations approved by the Owner for debris collection. Do not block building access at collection locations. Do not stockpile material on the roof.

C. Cover all exposed insulation each day and arrange work so that materials are not exposed to moisture at any time. Temporarily seal all edges of sheets not completed to the existing work daily. If asphaltic materials are used, completely remove these temporary connections before continuing with the work. At no time shall asphaltic materials be in contact with any PVC materials of permanent installation.

D. Upon completion of the work, arrange for the manufacturer to inspect the work; provide written report of their findings.

E. Allow deck surface to dry; if necessary, dry deck surface by artificial means approved in advance by the Engineer. Use electric dryers, portable blowers, or compressed air, but no open-flame dryers.

F. Inspect the condition of the existing roof deck and notify the Engineer of any damage, deterioration, or unusual conditions.

G. Sweep deck clean of all debris and foreign matter.

H. Maintain roof temporary seals (tie-offs) and existing roofing watertight throughout the course of the work. All seams shall be heat-welded before leaving the jobsite that day. Replace damaged or wet new roofing or insulation at no additional cost to the Owner. If water infiltrates under the new roof membrane, the membrane and insulation will be considered damaged.

I. Do not work in temperatures below 40°F. Comply with applicable recommendations by manufacturers of all materials for workmanship and handling, except as modified in this Section.

J. Apply all components of the roofing assembly in a single working day, including insulation, membranes, and flashing. Phasing of roofing in any form is not permitted.

K. Do not allow wrappers and packaging materials to be included in the roofing system.

L. Avoid exposure of any roofing components to rain, dew, or water of any kind. If rain threatens during the day, in an emergency, and at the end of each day, protect the unfinished exposed roofing and flashing components using water cutoffs at all open edges. Install cutoffs from the new roofing to the deck and to the adjacent existing roofing. Remove cutoffs completely before proceeding with subsequent work. If rain threatens during the day, or in an emergency, protect the unfinished exposed roofing and flashing components.

M. Keep a full fire extinguisher within reach during all roofing operations. Keep only full fire extinguishers on site; promptly remove discharged or partially full extinguishers.

N. Smoking is not permitted on the roof.

O. Ensure that all workmen and all others that walk on roofing wear clean, soft-soled shoes so as not to damage materials. Use equipment that has no sharp edges and is clean and free of any asphaltic and coal tar products.

P. Lay out work to minimize construction traffic over installed materials.

3.04 INSTALLATION OF VAPOR RETARDER

A. Install approved vapor retarder over prepared roof deck in accordance with the manufacturer's recommendations in locations indicated on the Drawings.

B. Install primer on clean, dry deck. Shake well before using. Apply with a brush, roller, or sprayer. Apply at manufacturer's recommended rate for the substrate. Allow primer to dry prior to installing vapor retarder. Do not use primer at membrane laps.

C. Vapor retarder must be installed over primer on the same day.

D. Begin vapor retarder installation at the bottom of the roof slope.

E. Lap all edges of the vapor retarder 4 in. minimum and all ends 6 in. minimum. Stagger joints minimum 12 in.

F. Roll vapor retarder with 100 lb. linoleum roller to achieve bond with the substrate. Roll all air bubbles out from the membrane.

G. Turn up vapor retarder a minimum of 3 in. at all penetrations and details as shown on the Drawings.

3.05 INSULATION AND COVER BOARD INSTALLATION:

A. Install insulation and cover board as required according to the insulation manufacturer's recommendations.

B. Lay insulation and cover board as required over the substrate in parallel courses with end joints staggered and tightly butted.

C. Neatly cut insulation and cover board to fit around penetrations and projections.

D. Do not install more insulation or cover board than can be covered by the end of the work day.

E. Taper insulation at drains to create a drain sump.

F. Adhesive Attachment:

1. Cover board shall be adhesively attached to the insulation boards with approved expand board adhesive. Adhesive spacing and application rate must meet manufacturer's requirements. Allow adhesive to expand to manufacturer's required volume prior to installing cover board above. Provide weights on the cover board to compress the boards tightly and evenly against the insulation. Do not remove weights until the adhesive has properly set and the cover board does not rise after weight removal.

G. Mechanical Attachment:

1. Insulation and cover board shall be mechanically fastened to the deck with approved fasteners and plates at a rate according to the insulation and cover board manufacturer's, FM's, and roof manufacturer's recommendations for fastening rates and patterns. The quantity and locations of the fasteners and plates shall also cause the insulation and cover boards to rest evenly on the roof deck/substrate so that there are no significant and avoidable air spaces between the boards and the substrate. Each insulation and cover board shall be installed tightly against the adjacent boards on all sides.

2. Fasteners are to be installed consistently in accordance with fastener manufacturer's recommendations. Fasteners are to have minimum penetration into structural deck recommended by the fastener and roof system manufacturer.

3. Use fastener tools with a depth locator and torque-limiting attachment as recommended or supplied by fastener manufacturer to ensure proper installation.

3.06 ADHERED THERMOPLASTIC WATERPROOFING MEMBRANE INSTALLATION:

A. Comply with manufacturer's most-current published quality assurance requirements, installation instructions, specific recommendations, and approved shop drawings for this project.

B. Apply adhered waterproofing membrane only in dry weather, and when the membrane, air, and substrate temperature is a minimum of 40°F (5° C), and rising, or above.

C. At no time shall asphaltic materials, coal-tar products, polystyrene, oil in any form, or other incompatible materials come into contact with the thermoplastic PVC membrane or other system components. Equipment shall have no sharp edges and shall be clean and free of any contaminants. Promptly remove any portion of PVC roofing that becomes contaminated.

D. Workmen and all others that walk on the waterproofing shall wear clean, soft-soled shoes so as not to damage materials. Heed all manufacturer's cautions and warnings in regard to product use. Membrane is slippery when wet or covered with frost, snow and ice. Take proper precautions.

E. Install stainless steel batten bars fastened 12 in. (30.5 cm) on center with acceptable fasteners into the structural deck, at the base of parapets, walls, and curbs according to manufacturer's recommended details. Install batten bars 3 ft. inboard of entire roof perimeter as required by manufacturer. Hot-air-weld PVC cord onto the waterproofing membrane on the penetration side of the termination bar. Weld a 4 in. (102 mm) wide membrane protection strip over bar ends and intersections.

3.07 HOT-AIR WELDING OF LAP AREAS:

A. General:

1. Adjacent sheets shall be welded in accordance with manufacturer's instructions. All side and end lap joints shall be hot air welded. Lap area shall be a minimum of 3 in. (76.2 mm) wide when machine welding, and a minimum of 4 in. (10.2 cm) wide when hand welding. Overlaps shall be with the flow of water where possible.

2. Welding equipment shall be provided by or approved by manufacturer. All mechanics intending to use the equipment shall be trained and qualified and shall have successfully completed a course of instruction provided by manufacturer's representative prior to welding.

3. All surfaces to be welded shall be clean and dry according to manufacturer's instructions. No adhesive shall be present within lap areas.

B. Hand Welding: Hand-welded seams shall be completed in three stages. Equipment shall be allowed to warm up for at least 1 min. prior to start of welding.

1. The lap may be tack welded as needed to hold the seam in place.

2. The back edge of the lap shall be welded with a thin, continuous weld to prevent loss of hot air during the final welding.

3. The nozzle shall be inserted into the seam at a 45° angle to the edge of the membrane. Once the proper welding temperature has been reached and the membrane begins to "flow," the hand roller is positioned perpendicular to the

nozzle and pressed lightly. For straight seams, the 1-1/2 in. (40 mm) wide nozzle is recommended for use. For corners and compound connections, the 3/4 in. (20 mm) wide nozzle shall be used.

C. Machine Welding: Machine welded seams are achieved by the use of manufacturer's automatic welding equipment. When using this equipment, manufacturer's instructions shall be followed and local codes for electric supply, grounding, and overcurrent protection observed. Dedicated circuit house power or a dedicated portable generator is recommended. No other equipment shall be operated off the generator.

D. T-Joints (three-way overlaps): Welding waterproofing membranes thicker than 60 mils (1.5 mm) requires special attention in order to ensure quality T-joints. The following steps must be followed:

1. When welding three-way intersections of waterproofing membranes greater than 60 mils in thickness, shave down the top edge of the second layer (middle layer) of membrane to create a smooth transition for the top layer of membrane to conform to.

2. Weld a 4 in. (10.2 cm) round or square (with rounded corners) patch of maximum 60 mil thick membrane centered at the T-joint intersection. Be sure to shave the edges of the membrane forming the T-joint to provide a smooth transition for the patch.

3. Shaving or chamfering of the membrane edges can be done either with a handheld grinder with a joint planer, with a chamfering tool, or by scraping gently with the hot nozzle of a hand-welding tool.

E. Quality Control of Welded Seams: All completed welded seams shall be checked by the Roofing Installer after cooling for continuity using a rounded screwdriver or other suitable blunt object. Visible evidence that welding is proceeding acceptably is smoke during the welding operation, shiny membrane surfaces, and an uninterrupted flow of dark gray material from the edge of completed joints. On-site evaluation of welded seams shall be made daily by the Installer at locations as directed by the Owner's Representative and/or design professional or manufacturer's representative. Two-inch (50.8 mm) cross-section samples shall be taken a minimum of three times a day through completed seams. Correct welds display failure from shearing of the membrane prior to separation of the weld. Each test cut shall be patched by the Installer at no extra charge to the Owner.

F. Membrane Flashings:

1. All flashings shall be installed concurrently with the waterproofing membrane as the job progresses. No temporary flashing shall be allowed without the prior written approval of the project manager and manufacturer. Approval shall be for specific locations on specific dates. Flashings shall be adhered to compatible, dry, smooth, and solvent-resistant surfaces.

2. When adhering to vertical surfaces greater than 30 in. (76.2 cm) in height, the flashing membrane is to be adhered to 1/2 in. (12.7 mm) minimum CDX exterior grade plywood or 24 ga stainless steel metal. The plywood or stainless steel metal is to be attached to the existing substrate according to industry standards. Countersunk or flathead stainless steel fasteners are to be used to attach the plywood or metal.

G. Flashing Installation:

1. Over the properly installed and prepared substrate surface, adhesive shall be applied using solvent-resistant paint rollers. The adhesive shall be applied at a rate of approximately 1-1/2 to 2-1/2 gal per 100 sq ft (0.61 – 1.02 l/m2) of surface depending upon substrate. The adhesive shall be applied in smooth, even coatings with no holidays, globs, puddles, or similar irregularities. Only an area that can be completely covered in the same day's operation shall be coated with adhesive. The surface with adhesive coating shall be allowed to dry completely prior to installing the membrane.

   a. Drying time increases with cooler temperatures and on days of high humidity because of slow evaporation of the solvent.

   b. The Applicator shall count the amount of pails of adhesive used per area per day to verify conformance to the specified adhesive rate.

2. When the adhesive on the substrate is dry, the flashing membrane is cut to a workable length and the underside is coated with adhesive at a rate of 1/2 gal per 100 sq ft (0.2 l/m2). When the adhesive has dried sufficiently to produce strings when touched with a dry finger, the coated membrane shall be rolled onto the previously coated substrate being careful to avoid wrinkles. Do not allow adhesive on the underside of the membrane to completely dry. The amount of membrane that can be coated with adhesive before applying to the substrate will be determined by ambient temperature, humidity, and manpower. Adjacent sheet shall be overlapped a minimum of 4 in. (10.2 cm). Flashings shall extend a minimum of 5 in. (12.7 cm) on to the waterproofing membrane. The bonded sheet shall be pressed firmly in place with a silicone hand roller.

3. No bonding adhesive shall be applied in lap areas that are to be welded. All sheets shall be applied in the same manner. Lap all sheets as required by welding techniques.

H. Complete the entire roofing assembly and flashing in a single working day; avoid exposure of any components to rain, snow, or dew. Provide temporary cutoffs around exposed edges and at incomplete flashing areas from the new membrane to the structural deck. Remove the cutoffs completely before proceeding with subsequent work. If rain threatens during the day, or in an emergency, protect the unfinished exposed waterproofing and flashing components.

I. All flashing membranes shall be mechanically fastened along the top edge according to approved manufacturer's details. Expansion fasteners with zinc sheaths and

stainless steel pins set in predrilled holes shall be used to secure flashings to masonry and concrete surfaces.

J. All flashings shall extend a minimum of 8 in. above the roof membrane surface unless previously accepted by the Engineer and manufacturer, in writing.

K. All flashing membranes shall be consistently adhered to substrates. All interior and exterior corners and miters shall be cut and hot-air-welded into place. No bituminous elements shall be in contact with the waterproofing membrane, unless asphalt-resistant membrane is used. Flashing substrates contaminated with coal-tar shall be overlayed with minimum 1/2 in. thick CDX plywood or minimum 24 ga stainless steel sheet metal.

L. All flashings shall be hot-air-welded at their joints and at their connections with the deck membrane.

M. Catalyzed Acrylic Resin Flashing System: Install the liquid-applied primer and flashing system in accordance with the membrane system manufacturer's printed installer's guidelines and other applicable written recommendations as provided by the manufacturer.

N. Temporary Cutoff:

1. All flashings shall be installed concurrently with the membrane in order to maintain a watertight condition as the work progresses. When a break in the day's work occurs with the membrane system incomplete, install a temporary watertight seal. The new membrane shall be sealed to the deck and/or the substrate so that water will not be allowed to travel under the new or existing waterproofing. When work resumes, the contaminated membrane shall be removed from the work area and disposed off site. None of these materials shall be reused in the new work.

2. If inclement weather occurs while a temporary waterstop is in place, the Installer shall provide the labor necessary to monitor the situation to maintain a watertight condition.

3. If any water is allowed to enter under the newly completed waterproofing, the affected area shall be removed and replaced at the Installer expense.

3.08 DRAINS

A. Verify that all existing roof drain lines are unblocked before starting work, and report blockages to the Engineer in writing.

B. Thoroughly clean pipe prior to installation. During installation, prevent foreign matter from entering system. Prevent if possible and remove stoppages or obstructions from piping and system.

C. Connect drains to existing piping with watertight connection. Provide all necessary accessories for water tight connection.

D. Test drains by filling the system with water and allowing to stand for 3 hrs with no noticeable loss of water. Test joints under a minimum head of 10 ft of water except at the upper most section. Test the upper most section to overflowing.

E. Provide membrane over the roof drain and cut out ply over the drain. Layout the work so that no laps come within 6 in. of the drain. Provide water cutoff sealant.

END OF SECTION

SECTION 07-6000

SHEET METAL CLADDING AND FLASHING

PART 1 – GENERAL

1.01 GENERAL REQUIREMENTS

A. Drawings and general provisions of the Contract, including General and Supplementary Conditions and other Division 01 Specification Sections, apply to this Section.

1.02 SCOPE OF WORK

A. GENERAL:

1. Coordinate all work with flashing installation under Section 07 5000 – Thermoplastic Membrane Roofing.

2. Provide high-temperature self-adhered membrane behind metal cladding and flashing are shown on the Drawings. Integrate with flashing and cladding as shown to provide correct laps.

3. Provide separator sheet behind cladding.

4. Provide concrete splash blocks at bottom of all down leaders

B. LECTURE HALL:

1. Provide aluminum flashing at base of wall.

2. Provide shingle-style aluminum wall panels, including attachment system components, integral flashing accessories at windows, door, corners, penetrations, and terminations.

C. STAIR PENTHOUSE:

1. Provide aluminum flashing at base of wall.

2. Provide shingle-style aluminum wall panels, including attachment system components, integral flashing accessories at windows, door, corners, penetrations, and terminations.

3. Provide aluminum angle at perimeter of glass block windows.

4. Provide membrane, aluminum and stainless steel flashing at window and door perimeters as shown on the Drawings.

5. Provide aluminum flashing and EPDM strip flashing at roof edge.

6. Provide down leader and collector box.

D. LECTURE HALL ROOF:

1. Provide aluminum roof eave flashing.

2. Provide aluminum gutter to match existing profile, gutter straps and all gutter accessories. Provide 4 down leaders, include 2 to grade and 2 onto the low-sloped roof.

E. ALTERNATE 1: STAIR ROOFS (STAIR PENTHOUSE, LOWER EAST ROOF, LOWER WEST ROOF)

1. Provide stainless steel reglet-set flashing and counter-flashing in masonry wall above low-sloped stair tower roofs.

1.03 RELATED WORK SPECIFIED ELSEWHERE

A. Section 02 5000 – Selective Removals

B. Section 04 2000 – Unit Masonry.

C. Section 06 1000 – Rough Carpentry.

D. Section 07 3100 – Asphalt Shingle Roofing.

E. Section 07 5000 – Thermoplastic Membrane Roofing.

F. Section 07 9200 – Joint Sealants.

G. Section 08 1000 – Metal Doors and Frames and Hardware.

H. Section 09 9113 – Painting

1.04 REFERENCED STANDARDS

A. The following documents are a part of this Specification, except as modified in the technical sections of the Specifications, including the references contained in each document. Comply with all applicable Sections of the document and the referenced standards unless specifically modified herein.

1. “Copper and Common Sense” by Revere Copper Products, Rome, New York. Referenced for general sheet metal workmanship and detailing.

2. Product manufacturer’s written recommendations.

3. ASTM International (ASTM): Standards as specified or referenced herein.

4. “Architectural Sheet Metal Manual” 7th or current edition by the Sheet Metal and Air Conditioning Contractors National Association (SMACNA).

1.05 SUBMITTALS

A. Submit the following items from the manufacturer:

1. Samples and/or manufacturer's literature for all materials specified and proposed for use on this project, each properly labeled.

2. Manufacturer's installation recommendations for all materials used on this project.

3. Safety Data Sheets (SDS) for appropriate materials.

4. Certifications (in time to prevent delay in the work) by the producers of all materials that all materials supplied comply with all the requirements of these Specifications and the appropriate standards.

B. Shop Drawings:

1. Submit shop drawings of all metal flashing, gutters, and metal wall panels with underlayment showing exact profile, joints, terminations, transitions, and methods of attachment; include details for repairs of, and additions to, existing materials. Coordinate with shop drawings shown in related sections.

C. Calculations, sealed by a Connecticut-licensed Professional Engineer, showing the adequacy of metal panel anchors and attachments, stiffness of the panels, and adequacy of components that are not verified by testing. Calculations and design shall include metal panel system attachment to framing.

D. Samples for Initial Selection: Metal panel color and finish options.

1.06 QUALITY CONTROL AND QUALITY ASSURANCE

A. Perform all work in strict accordance with all applicable laws and regulations of the building code and with all other authorities having jurisdiction. All such requirements shall take precedence over the requirements of the Specifications except where the requirements of the Specifications are more exacting or stringent.

B. Contractor Qualifications: The Contractor must have a minimum of 10 years of experience with successfully completed projects on existing buildings. Provide a list of five projects or more showing at least 10 years successful experience with similar work on existing buildings. List the building name and address, the Owner's representative, the General Contractor, and the Engineer or Architect observing the work, with phone numbers and contact personnel. The foreman for this project must individually have at least five years' successful experience on similar work on similar buildings.

1.07 MOCKUPS

A. Mockups: Perform the following mockups on the building, at locations approved by the Engineer in advance. Notify the Engineer at least 48 hours before starting the work on each mockup. Reconstruct each mockup as many times as necessary to

meet the approval of the Engineer. Do not proceed with any part of the work before the mockup is approved by the Engineer. Mockups will be used to establish both technical and aesthetic standards for the remainder of the project. Once the mockup is approved, the mockup may become part of the finished work.

1. 10 lf of asphalt shingle roof eave flashing

2. A gutter from a building corner to an expansion joint (approximately 25 lf), including straps, braces, and end caps.

3. Aluminum panel installation details. At a minimum provide the following:

   a. 20 sf of aluminum panels installation

   b. Outside corner detail

   c. Inside corner detail

   d. Base of wall detail

   e. Top of wall detail.

   f. One penetration detail

   g. Termination detail

4. Glass block window perimeter flashing

B. Mockups must be prepared by scheduled installer. Include all required flashing, membranes, fasteners and other components as required. Note that flashing installation mockups must be in place and approved before subsequent installation can continue.

1.08 PERFORMANCE REQUIREMENTS

A. Flashing: Provide base flashing, perimeter flashing, detail flashing, and component materials that comply with requirements and recommendations in FM 1-49 Loss Prevention Data Sheet for Perimeter Flashing, FM 1-29 Loss Prevention Data Sheet for Above Deck Roof Components, ANSI/SPRI ES-1, NRCA Roofing and Waterproofing Manual for Construction Details, and SMACNA Architectural Sheet Metal Manual for construction details as applicable.

B. Roof-Edge Flashing: All roof-edge flashing, shall meet the requirements of ANSI/SPRI ES-1 in addition to other sheet-metal-flashing standards.

C. Design Loads and Structural Requirements

1. System shall be designed to support its own weight in combination with other specified pressures and loads noted in this Section 07 5000. System must withstand 150% of design load without disengagement or malfunction of panel, anchors, sealant, or other conditions.

2. Reinforce metal wall panels as required to limit panel deflections to L/60. This deflection criteria takes precedence over other deflection criteria in reference standards.

3. Maximum Deviation from Vertical and Horizontal Alignment of Erected Panels: 1/4 in. (6 mm) in 20 ft (6 m) non-accumulative.

4. Attachment system shall allow for the free and noiseless vertical and horizontal thermal movement due to expansion and contraction for a material temperature range of –20°F to +180°F (–29°C to +82°C). Buckling of panels, opening of joints, undue stress on fasteners, failure of sealants or any other detrimental effects due to thermal movement will not be permitted.

1.09 PROJECT CONDITIONS

A. Field Measurements: Verify locations of structural members and wall opening dimensions by field measurements before metal wall panel fabrication and indicate measurements on Shop Drawings.

B. Established Dimensions: Where field measurements cannot be made without delaying the Work, Engineer may allow Contractor to establish dimensions and proceed with fabricating metal wall panels without field measurements. Coordinate construction to ensure that actual dimensions correspond to established dimensions.

1.10 WARRANTY

A. Guarantee all work under this Section in a document stating that if, within 2 years after the Date of Substantial Completion of the Work, any of the work of this Section is found to be defective or not in accordance with the Contract Documents, the Contractor shall, at its sole cost and expense, correct it promptly after receipt of a written notice from the Owner to do so, unless the Owner has previously given the Contractor a written acceptance of such condition. Also, state that the Contractor shall bear all costs incurred by the Owner, including reasonable attorney's fees, court costs, and expert witness and consultant fees, to enforce Contractor's compliance with the obligations of this Guarantee. The obligations of this Guarantee shall run directly to the Owner and its successors and assigns and may be enforced by the Owner and its successors and assigns against the Contractor, shall survive the termination of the Contract, and shall not be limited by conditions other than this Contract.

B. Metal Panels: Provide manufacturer's standard warranty period from Date of Substantial Completion. Provide special Warranty on Panel Finishes. Manufacturer's standard form in which manufacturer agrees to repair finish or replace metal wall panels that show evidence of deterioration of factory-applied finishes within specified warranty period. Finish Warranty Period: Twenty years from the date of Substantial Completion.

1.11 DELIVERY, STORAGE, AND HANDLING

A. Protect materials in transit and stored materials from damage due to exposure to moisture, excess heat, sparks, flame, or any other cause.

B. Replace damaged materials at no cost to the Owner.

C. All materials to be new. Handle all materials to prevent bending, warping, twisting, and surface damage.

D. Protect all materials in original unopened labeled containers and packaging and in compliance with manufacturer's directions. Comply with manufacturer's recommendations for minimum and maximum time and temperature limits for storage.

E. Promptly remove from the site all materials rejected by the Architect during transportation, storage, handling, and installation.

F. Stack metal wall panels horizontally on elevated platforms or pallets, covered with suitable weathertight and ventilated covering. Use waterproof tarpaulins to cover all stored materials top to bottom, with slope for drainage of water. Store flammable materials in a cool, dry, protected area away from sparks and open flames. Do not store metal panels in contact with each other or with other materials that might cause staining, denting, or other surface damage.

G. Do not stockpile materials or equipment to overload any building or site component.

H. The Contractor is responsible for protecting all materials and equipment stored on the site.

I. Protect liquid components (including sealants) and all other materials from damage due to freezing or other damage due to extreme temperatures.

J. Do not dilute primers, adhesives, coatings, or sealants. Keep containers closed, except when removing materials.

K. Dispose of debris as required by Owner and all state and local ordinances.

L. Do not allow wrappers, packaging, or other miscellaneous materials to be included in the system.

PART 2 – PRODUCTS

2.01 MATERIALS

A. Aluminum (metal flashing and trim, unless noted otherwise): ASTM B209, Alloy 3003-H14, 0.040 in. thick, except 0.050 in. thick hook strips and cleats.

1. Fasteners and Accessories: Use stainless steel screws, bolts, washers, and nails as required. Nails to be 12 ga with min. 1/4 in. dia. flat head, annular threaded, with needlepoint, and of sufficient length to obtain 1-1/4 in. embedment into blocking, and for full depth into plywood.

2. Sealant, for Use in Exposed Locations Only: For metal-to-metal joints, use one-part urethane such as Sikaflex-1a by Sika Corp, Dymonic by Tremco, Inc. or approved equal.

3. Finish: Baked-on fluoropolymer coating, with 70% PVDF Kynar 500 resin, by PPG or approved equal; standard color as selected by the Owner. Include protective plastic film on all panels and flashing for shipping and storage. Coat both sides of the aluminum sheet.

B. Stainless Steel: 18-8 stainless steel AISI Type 304, 2D finish, 24 ga except used 22 ga for hook strips and cleats (2B finish is acceptable for hook strips).

1. Fasteners and Accessories:

a. Rivets for Metal-Flashing Connections: Stainless steel pop rivets

b. Use Stainless Steel Screws, Bolts, Washers, and Nails as Required. Nails to be 12 ga with minimum 1/4 in. dia. flat head, annular threaded, with needlepoint, and of sufficient length to obtain 1-1/4 in. embedment into blocking, and for full depth into plywood.

2. Solder: ASTM B32, Class 50A or 50B, Bar Form, 50% block tin and 50% pig lead, with an approved brand of soldering flux.

C. Expansion Anchors for Attaching Metal Flashing Cleats to Masonry and Concrete. 1/4 in. dia. Nylon-Nailin with stainless steel drive pin by Powers Fasteners. Provide lengths to obtain 2 in. embedment into masonry or concrete. Unless otherwise shown on the drawings, install with 3 in. minimum edge distance of masonry and concrete. Provide two fasteners per each cleat.

D. Fasteners and Accessories for Attaching Metal to Wood: Use stainless steel screws, bolts, or nails as required. Nails to be 12 ga, with minimum 1/4 in. diameter flat head, annular threaded, with needle point, and of sufficient length to obtain 1-1/4 in. embedment into blocking, and for full depth into plywood.

E. EPDM Strip: for metal flashing expansion joints. 0.060 in. thick uncured EPDM; minimum 6 in. wide strip. Use manufacturer's recommended primers, adhesives, sealants, and solvent cleaners.

1. "Form Flash," by Firestone.

2. Sure Seal by Carlisle.

F. Self-Adhered Membranes:

1. High-temperature self-adhered membrane (Wall Membrane): Self-adhered membrane consisting of butyl adhesive backed by a layer of high density cross laminated polyethylene film, 30 mils think, Grace Ultra by GCP Applied Technologies, or approved equal.

2. Self-Adhered Membrane Flashing (Windows and Door Flashing): 0.040 in. thick self-adhered sheet air and vapor barrier composite membrane consisting of a rubberized-asphalt adhesive laminated to plyethylenene surface, Perm-A-Barrier Detail Membrane by GCP Applied Technologies, or approved equal.

3. Use manufacturer's recommended primers, liquid membrane, adhesives, sealants, and solvent cleaners. For products by GCP Applied Technologies:

   a. WB Primer

   b. Liquid Membrane

G. Bond Breaker Tape: 0.006 in. thick polyethylene, adhesive-backed on one side, width as required.

H. Separator Sheet: Rosin-sized Kraft paper, weighing approximately lbs/100 sq ft.

I. Pre-shimmed Butyl Glazing Tape (for Receiver Strip): Pre-shimmed butyl glazing tape by Tremco or approved equal.

J. Metal Gutters

1. General design

   a. Gutter shall be designed and properly supported with straps and braces in accordance with SMACNA. Provide thickness, sizes, and spacing specified here or on the drawings unless otherwise recommended by SMACNA.

2. Gutter

   a. Install standard size gutters unless otherwise noted on the drawings. The front edge of gutter shall be 1 in. minimum lower than the back so that any overflow will spill over the front of the gutter. Notify the Engineer if the sheet metal unformed metal stock width (as known as "girth") is greater than 24 in.

   b. 0.040 in. thick aluminum.

   c. Provide expansion joints at center of long spans and where shown on the drawings and end caps at higher ends.

   d. At transverse seams in the aluminum, provide EPDM membrane.

3. Straps and Braces

   a. 1/4 in. x 2 in. aluminum. Provide at a 16 in. spacing.

4. Continuous reinforcing bar

a. 1/8 in. x 1 in. aluminum.

5. Downspouts

a. Provide rectangular aluminum downspouts. Size to match existing, 4 in. x 4 in. minimum.

b. Provide supports attached to existing masonry as specified on the Drawings.

K. Aluminum Panels: Concealed-Fastener, Formed Metal Wall Panels, designed for sequential installation by interlocking panel edges and mechanically attaching panels to supports using concealed clips or fasteners.

1. Material: 0.040 in. thick aluminum

2. Exterior Facing Finish: Kynar 500 PVDF coating.

3. Interior Facing Finish: Same finish as exterior.

4. Basis of Design: ATAS Versa-Lok, shingle style

5. Fasteners: Self-tapping screws, bolts, nuts, self-locking rivets and bolts, end-welded studs, and other suitable fasteners designed to withstand design loads. Provide concealed fasteners, exposed fasteners are prohibited without the written approval of the Engineer.

6. Flashing and Trim: Aluminum, finish and color shall be the same as the facings of adjacent wall panels, unless otherwise indicated.

PART 3 – EXECUTION

3.01 EXAMINATION

A. Examine all surfaces scheduled to receive sheet metal flashing for roughness, contaminants, unsound structural substrates, or other conditions that may impair the application. Notify the Engineer in writing of any such conditions; do not commence work until all defects are remedied.

B. Verify all site conditions and dimensions by field measurements in consideration of the special conditions associated with alterations of existing construction and reconstruction. Notify the Engineer immediately of any inconsistency between field conditions found during demolition and those shown in the Contract Drawings. The Engineer will determine what modifications or additional repairs are necessary.

3.02 SELF-ADHERED MEMBRANE INSTALLATION

A. Inspect the condition of the substrate scheduled to receive self-adhered-membrane underlayment; no gaps or voids shall be present when membrane is applied. Report any unusual conditions to the Engineer promptly and stop work as not to cover

damaged areas. The Engineer will determine the nature of the repairs to be made to wood decking, and any other substrates.

B. Do not apply the permanent roofing materials unless the exposed surface of the substrate is clean and dry.

C. Do not leave self-adhered membrane underlayment exposed to the elements for more than one month. Remove and replace self-adhered membrane underlayment that has been exposed for longer than this period.

D. Remove all dirt and debris from surfaces scheduled to receive underlayment. Prime all surfaces to receive self-adhered membrane underlayment with the primer recommended by the membrane-underlayment manufacturer. Apply primer only to the area to be covered with membrane during the current working day. Apply primer with a roller or brush at the rate recommended by the self-adhered membrane underlayment manufacturer. Allow primer to dry tack free before covering.

E. Apply self-adhered membrane underlayment in compliance with the printed instructions of the manufacturer, unless modified by this Section.

F. Begin application of sheets at bottom of slope and work up the roof slope; shingle all side laps 3-1/2 in. minimum to shed water, and provide 6 in. minimum end laps.

G. Provide self-adhered membrane underlayment where shown on the Drawings. Apply sheets in longest lengths practical; shingle side laps so that they do not “buck” water. Roll out sheets on primed surfaces and align. Reroll one-half of sheet in its long direction and cut through release paper, taking care not to cut membrane.

H. Roll membrane onto primed surfaces, pulling release paper in front of roll such that once release paper is removed, membrane is immediately set onto surface. Place sheets without fishmouths or wrinkles. Do not stretch the membrane.

I. If fishmouths and wrinkles appear, cut out and flatten the affected area, and cover with membrane extending at least 6 in. beyond the cut on all sides.

J. Immediately after applying membrane sheet, hand press into contact with the surface, and roll entire membrane towards lap seams with a handheld neoprene roller. Remove air pockets and patch as described in Step I. Create a uniform and complete bond.

K. Seal all exposed perimeter edges at temporary tie-ins with the self-adhered membrane underlayment manufacturer’s recommended mastic each day, and remove mastic before applying additional membrane.

L. Re-prime areas that become dirty or debris-covered during the course of the work prior to installing membrane.

M. At self-adhered membrane underlayment flashing locations:

1. Round or chamfer all outside corners; ensure that corners are smooth and free of sharp protrusions. At inside corners, apply a 3/4 in. fillet of the

membrane manufacturer's recommended liquid-applied membrane, troweled into corners, and allow to cure prior to installing membrane underlayment.

2. At all inside and outside corners, provide a 12 in. wide reinforcing strip of the membrane centered over the transition, using general procedures described above; install subsequent membrane sheets over reinforcing strip.

3. At base of walls and curbs, extend membrane sheet up vertical surfaces (over reinforcing strip) a minimum of 12 in. or to the top of curbs.

4. Apply liquid membrane over all sheet seams for a minimum of 12 in. in each direction or as specified below in the following locations:

   a. At all interior and exterior corners formed by the intersection of two surfaces.

   b. Along entire length of the base of rising walls or curbs within 3 ft of eaves or transitions with low-slope roofing.

5. Seal ends of vertical seams and ends of membrane with a bead of liquid-applied membrane.

N. Pipe Penetrations: Neatly trim membrane to fit closely around pipe penetration, and seal membrane edge to pipe shaft with liquid membrane. Prefabricate a flashing collar and a rectangular piece of membrane to conform to flashing geometry. Roll flashing collar firmly onto wall sheet and pipe shaft. Provide 3 in. wide flashing band over the flashing collar on the pipe shaft, and seal the edges of the flashing band with liquid membrane.

3.03 SEPARATOR SHEET INSTALLATION

A. Install rosin-sized Kraft paper immediately before installation of sheet metal flashing; replace any separator sheet material that comes in contact with moisture at any time.

B. Lay out rosin paper without fastening through underlayment. Lap sides 2-1/2 in. minimum and ends 6 in. minimum in a shingled fashion.

3.04 GENERAL SHEET METAL WORKMANSHIP

A. Except as modified in this Section, comply with all recommendations of the current edition of Revere's "Copper and Common Sense" for general workmanship requirements and details of forming joints. Completed metal shall be straight, flat, and without buckles, dents, scratches, or other blemishes.

B. Form sheet metal on a bending brake. Perform shaping, trimming, and hand-seaming in the shop as far as practicable, with the proper sheet-metal working tools. Make the angle of the bends and the folds for interlocking the metal with full regard for expansion and contraction to avoid buckling or other deformation in service. All lines shall be straight and crisp except where thickness of metal dictates radius bend, and all exposed edges shall be hemmed 1/2 in. minimum, unless noted otherwise on Drawings.

C. Lap all materials at all joints 6 in. minimum unless noted otherwise.

D. Soldering:

1. For any soldering work done on site, protect building components below the flashing from drips of solder or flux by temporarily installing tarps, felt paper, or other protective sheet materials. Provide separator sheet between self-adhered membrane underlayment and all metal flashing.

2. Use maximum width metal sheets to form flashing to minimize joints. At flashing transverse joints, provide either a flat lock seam or a lap seam with rivets. Lap adjacent sheets 1-1/2 in. Space rivets at 1 in. o.c. in a staggered pattern unless otherwise noted.

3. Immediately prior to soldering, mechanically clean all metal to be soldered with steel wool or by other acceptable means, apply flux, and pre-tin. Clean metal again if it is not soldered on the same work day.

4. Lap metal and fully sweat all flashing corners, end dams, and joints with solder for permanently waterproof connections. Maintain continuity of flashings and watertightness at all jogs, steps, transitions, corners, and similar areas. Reinforce all metal-flashing corners as required.

5. Perform all soldering slowly with well-heated heavy (10 lbs/pr) irons with properly tinned, clean, blunt tips. Do not use torches. Apply enough heat to sweat the solder completely through the full width of the seam. Close clinch lock seams gently with a block of wood and mallet, then flux and show at least one full inch of continuous and evenly flowed solder. Whenever possible, do all soldering in flat position. All sloped and vertical seams shall be laced and soldered a second time.

6. After soldering, immediately remove all traces of acid of flux with an appropriate neutralizer, followed by repeated washing and scrubbing.

E. Dissimilar Materials: Isolate all dissimilar metals with bond breaker tape. Comply with ANSI/AAMA 101, Appendix.

3.05 METAL FLASHING

A. Provide metal-flashing systems as shown on the approved shop drawings. Coordinate metal-flashing details with other roof shop drawings. Provide a separator sheet between self-adhered membrane underlayment and all metal flashing and between dissimilar metals.

B. Provide 1/8 in. per foot minimum slope on all horizontal surfaces to prevent ponding, unless otherwise indicated.

C. Window and Door Pan Flashing:

1. Pan up ends of flashing, and solder corners watertight.

2. Set the horizontal leg of flashing on a pre-installed sloped surface as shown on the Drawings. Extend the flashing to the exterior face, turn down at 30°, and form a hemmed drip. Form the vertical leg of the flashing as shown on the Drawings.

D. Counterflashing Skirt Flashing: Provide skirt flashing at roof to rising walls, with 2 in. wide loose cleats at 12 in. o.c., to counterflash step flashing and roofing underlayment, as shown on the Drawings. Lock the transverse seams of adjacent skirt flashing together using a 1/2 in. flat seam. Hem the bottom edge of the skirt, and hook the top edge into the flashing receiver. Fold cleat tabs up to firmly secure the skirt flashing. Do not solder cleat to skirt.

E. Eave Flashing

1. Install continuous metal edge eaves. Lap ends 4 in. with sealant in the laps. Fasten the flanges with specified nails at 6 in. o.c., staggered.

F. Receiver Strips (Blind Nailers): Provide metal receiver strips at vertical terminations and where detailed. Brake metal as detailed. Provide a solid bed of sealant in joints. Provide pre-shimmed glazing tape behind receiver strips.

G. Hook Strips: Provide continuous hook strips for along the chimney downslope edge base flashing, and where indicated on the Drawings, nailed 4 in. on center into solid wood blocking, 12 in. o.c. into brick masonry. Crimp the formed hook of metal flashing onto the hook strip, forming a 3/4 in. loose lock, and overlapping the hook strip at least 1/2 in.

H. Fasteners: Nail all roof metal flashings with two rows of approved fasteners at 4 in. o.c. in each row, staggered. Nail all through-wall metal flashings with two rows of approved fasteners at 16 in. o.c. in each row, staggered. Bend all drip edges minimum 1/4 in.

I. Cleats: Provide 2 in. wide metal cleats at 12 in. o.c. for long runs of flashing or 2 cleats per each step skirt flashing, where shown on the Drawings. Provide two fasteners per cleat. Crimp the formed hook of the metal flashing into the cleat, overlapping the cleat at least 1/2 in.

J. Reglets: Provide metal flashing into saw-cut reglets as shown on the Drawings, fastening the upturned leg of flashing in the reglet at 6 in. o.c. Provide sealant into reglet joint.

3.06 METAL GUTTERS

A. Install per SMACNA guidelines or if applicable the manufacturer’s instructions.

3.07 METAL PANELS

A. Conform to panel fabricator’s instructions for installation of concealed fasteners except as modified herein.

B. Install materials in accordance with approved drawings.

C. Erect panels plumb, level, and true.

D. Anchor panels securely per engineering recommendations and in accordance with approved shop drawings to allow for necessary thermal movement and structural support.

E. Do not cut, trim, weld, or braze component parts during erection in a manner which would damage the finish, decrease strength, or result in visual imperfection or a failure in performance. Return component parts which require alteration to shop for refabrication, if possible, or for replacement with new parts.

3.08 WINDOWS

A. Provide aluminum angle at the interior side of the window sill and jamb, to be used as a backing for self-adhered membrane. Angle shall be attached to the rough opening carpentry and shall not be anchored through or to interior finishes.

B. Flashing: Coordinate with flashing installation to ensure weathertight construction and assembly.

C. Seal all splices and transitions. Provide fully watertight conditions.

3.09 CLEAN-UP

A. Remove and dispose of all construction debris daily in an appropriate manner.

END OF SECTION

SECTION 07 9200

JOINT SEALANTS

PART 1 – GENERAL

1.01 GENERAL REQUIREMENTS

A. Division 1, as listed in the Table of Contents, applies here.

1.02 SCOPE OF WORK

A. Provide interior and exterior sealant joints at windows and door.

B. Provide miscellaneous sealants as shown on the Drawings.

1.03 RELATED WORK SPECIFIED ELSEWHERE

A. Section 02 5000 – Selective Removals

B. Section 04 5000 – Unit Masonry

C. Section 07 5000 – Thermoplastic Membrane Roofing

D. Section 07 6000 – Sheet Metal Cladding and Flashing.

E. Section 08 1000 – Metal Doors and Frames and Hardware

F. Section 09 9113 – Painting

1.04 QUALITY CONTROL AND QUALITY ASSURANCE

A. Perform all work in strict accordance with all applicable laws and regulations of the building code and with all other authorities having jurisdiction. All such requirements shall take precedence over the requirements of the Specifications except where the requirements of the Specifications are more exacting or stringent.

B. Contractor Qualifications: Engage an experienced installer who has a minimum of 5 years' experience with successfully completed work described in this Section.

C. Preinstallation Conference: Conduct a conference at the project site to review installation requirements including surface preparation, substrate condition, forecasted weather conditions, installation procedures, testing and inspection procedures and protection and repairs. Require the attendance of Engineer, Installer, installers of adjacent Work and any other affected party.

1.05 SUBMITTALS

A. Submit the following items from the manufacturer.

1. Samples and/or manufacturer's literature for all materials specified and proposed for use on this project, each properly labeled.

2. Manufacturer's installation recommendations for all materials used on this project.

3. Certifications (in time to prevent delay in the work) by the producers of all materials that all materials supplied comply with all the requirements of these specifications and the appropriate standards.

B. Test Reports: Manufacturer test reports showing compatibility and adhesion to proposed materials with recommended sealants and primers.

C. Contractor qualifications; refer to requirements in Para. 1.04 B.

1.06 FIELD SEALANT ADHESION TESTING

A. A minimum of four weeks before general sealant installation is scheduled to proceed, prepare 1 in. wide by 1/8 in. thick sealant specimens that are 4 in. long each for each type of sealant, substrate, primer, and application specified. Use surface preparation techniques and primers recommended by the manufacturer from laboratory tests and approved by the Engineer. Prepare a total of three samples for each jobsite condition and for each surface preparation technique recommended by the sealant manufacturer. Apply 1 in. wide bond breaker tape across one end of each test specimen to produce an edge for gripping the specimen during testing.

B. Cure sealant for at least twenty-one days prior to conducting field peel tests.

C. Notify the technical representative of the sealant manufacturer and Engineer in writing at least one week prior to the start of sealant application and again prior to the start of the peel test so they can be present to observe the installation and testing.

D. Pull sealant joint apart and check sealant's adhesion to the substrates. If the sealant does not adhere well to the substrates, then modify installation procedures as recommended by the sealant manufacturer and approved by the Engineer. Do not start sealant installation until the samples are tested and approved by the Engineer.

E. Provide a written report on test results to the Engineer, sealant manufacturer, and Installer. Include a description of the test setup, surface preparation methods, cure time, and test results.

1.07 WARRANTY

A. Guarantee all work under this Section in a document stating that if, within 2 years after the Date of Substantial Completion of the Work, any of the work of this Section is found to be defective or not in accordance with the Contract Documents, the Contractor shall correct it promptly after receipt of a written notice from the Owner to do so. Also, state that the Contractor shall bear all costs incurred by the Owner, including reasonable attorney's fees, to enforce compliance with the obligations of this Guarantee. The obligation of these Guarantees shall run directly to the Owner and may be enforced by the Owner against the Contractor, shall survive the

termination of the Contract, and shall not be limited by conditions other than this Contract.

PART 2 – PRODUCTS

2.01 MATERIALS

A. Sealant: Provide urethane sealant (Type 1) as described below unless existing sealant was silicone; then use a Type 2 sealant as specified. Provide sealant that demonstrates good adhesion to stucco, masonry, wood, and metal substrates, as determined by field adhesion testing. Sealant to provide a minimum of ± 50% joint movement capacity. Color to be chosen by the Owner from the manufacturer's standard colors.

1. Type 1 Sealant: Nonstaining, one-part urethane sealant, meeting the requirements of ASTM C920 – Standard Specification for Elastomeric Joint Sealants Type S, Grade NS, Class 35.

    a. Sealants meeting these requirements include Sika-flex 1a and Sonneborne NP-1.

2. Type 2 Sealant: Nonstaining, neutral-cure silicone sealant meeting ASTM C920, Type S, Grade NS, Class 25.

    a. Sealants meeting these requirements include Dow Corning 756 SMS Building Sealant.

B. Surface cleaner and primer as recommended by sealant manufacturer and as required by the field adhesion test. Surface cleaner and primer must not stain the brick masonry and other surfaces. Acceptable field adhesion tests performed without surface cleaners and/or primers do not relieve the Contractor of the requirement to use surface cleaners and/or primers unless approved by the Engineer.

C. Backer Rod: Closed-cell nongassing polyethylene rod. The diameter of the rod is to be approximately 25% in excess of joint width. The surface skin of the rod shall be continuous and unbroken and of sufficient thickness to preclude outgassing and formation of voids in the overlying sealant.

D. Bond Breaker Tape: 0.006 in. thick polyethylene, to which sealant does not bond, adhesive-backed on one side, width as required.

E. Reticulated Foam Weeps: Open-cell, 30 ppi polyurethane foam block, color to match sealant, size: 1/2 in. by 1/2 in. by 1 in. or as required by joint geometry.

PART 3 – EXECUTION

3.01 EXAMINATION

A. Verify all site conditions and dimensions by field measurement in consideration of the special conditions associated with the work. Notify the Engineer immediately of any inconsistency between the conditions found and those shown in the Contract Drawings.

3.02 JOINT CONSTRUCTION

A. Configure the sealant joints as shown on the Drawings. Avoid three-sided adhesion at all sealant joints.

B. Configure the joints as shown on the drawings. At fillet (triangular) joints, extend the sealant at least 3/8 in. onto the substrate beyond the bond breaker tape or backer rod and at least 5/8 in. onto the substrate perpendicular to the tape or rod. The minimum thickness between the edge of the tape or rod and surface of the sealant joint shall be 1/4 in. Do not prepare or seal over masonry that is less than twenty-one days old or that was repointed within twenty-one days.

C. For typical butt sealant joints, place the backer rod or bond breaker so the sealant depth measured at the center of the joint after tooling is one-half of the sealant joint width, with a minimum depth of 1/4 in. and a maximum depth of 1/2 in. Avoid three-sided adhesion at all sealant joints.

D. Provide sealant weeps so that their spacing does not exceed 24 in. o.c. unless shown otherwise on the drawings.

3.03 SURFACE PREPARATION

A. Do not install sealant until the masonry has first been cleaned. Remove all dirt or other foreign substances, including existing sealant remnants, from surfaces to receive sealant. All surfaces shall be dry before preparation begins. The solvent cleaning preparation is to be done immediately before insertion of the final backer rod or bond breaker and after any temporary rods or seals are removed.

B. Solvent Cleaning for Metal Surfaces: Use two clean, white, soft, lint-free cotton cloths and clean, fresh denatured alcohol and other solvents as required to clean metal flashing and other nonporous surfaces. Wet one cloth with solvent and wipe surface vigorously. Use second cloth to clean surface before solvent evaporates. Pump solvent from cans onto first cloth. To avoid contamination of solvent, do not dip cloth into solvent. Repeat this two-cloth procedure until surface does not discolor cloth, and repeat at least once. Do not solvent clean at temperatures below 45°F.

3.04 BACKUP MATERIAL INSTALLATION:

A. Unless noted otherwise, provide clean, dry backup rod or quarter-round rod, in or over, all joint openings against dry substrates. Remove all wet materials from the jobsite. Replace any backer rod not sealed over by the end of each day and solvent clean surfaces again.

B. Change rod sizes as frequently as required by the variation in the joint width. Do not twist rods together. Butt ends of rods tightly. Provide a full range of rod sizes at the site of all sealant work.

C. Do not touch with fingers or otherwise contaminate the substrate surfaces while inserting the backer rod or bond breaker tape.

D. Do not rupture the skin of the closed-cell backer rod during installation. Do not cut rod lengthwise as substitute for smaller diameter rod. Remove any rod containing punctures, and solvent clean the surfaces again.

E. Reticulated Foam Weeps at Sills: Snugly fit weep hole filler in the sealant weeps at the specified spacing. Set each filler directly on sill flashing or stone. Set front of weep hole filler beyond outermost edge of sealant joint. Do not allow sealant to contact exposed face of filler; protect with tape temporarily if necessary.

3.05 APPLY PRIMER

A. Apply primer to all substrates, except glass, after backer rod installation. Apply primer to clean, dry substrates at ambient temperatures above 45°F.

B. Pour primer into a clean container for use. Do not pour more than a 10 min. supply into container to prevent deterioration.

C. Replace cap on primer can immediately after pouring. Remove from the site any primer that contains a white precipitate or that has thickened.

D. Apply primer with a clean brush. Do not apply primer to exposed surfaces beyond sealant. Mask all surfaces before priming, except where surface irregularities will allow the primer to wick beneath the masking tape. Use only one coat of primer. Do not apply primer in a thick layer, which will form a white, powdery film. Remove any films with a clean, dry, lint-free cloth and repair in accordance with manufacturer's written recommendations.

E. Allow primer to dry. Do not allow primer to become wet before sealant application.

3.06 APPLICATION

A. Inspect each cartridge or container of sealant before use and verify that the production date is within six months of the date of application. Remove from the site all sealant more than six months old. Each applicator shall understand the method of coding the production date on the cartridge.

B. Mask all exposed surfaces, not masked for priming, along joint before applying sealant.

C. Recheck correct backer rod and bond breaker tape positioning before applying sealant.

D. Apply sealant only to clean, dry, primed surfaces (where required) at ambient temperatures above 45°F. Seal joints within 10 hours of primer application.

E. Fill all joints solidly and continuously with sealant, neatly applied with a standard caulking gun in a continuous motion, using a slight pressure. Push the sealant bead ahead of the nozzle; do not drag the nozzle.

F. Within 5 min. of sealant application and before skin develops on sealant, dry tool the joint surface with a concave tool to insure intimate contact with substrate and to eliminate air bubbles. Do not use any liquid for tooling. Provide a smooth, uniform finished surface.

G. Mate joints formed from different colored sealants before skin forms on the sealant.

H. Remove masking tape within 10 min. of tooling. Avoid contaminating adjacent surfaces with excess sealant. Remove all traces of smears and droppings on metal or glass surfaces promptly, using a solvent recommended by the sealant manufacturer that will not damage or discolor the building surfaces. Remove smears and droppings on porous surfaces by mechanical means after the initial cure of the sealant.

I. Coordinate work with other trades to prevent contamination of fresh sealant by dust or other debris.

J. Provide foam baffle weep in joints above flashing.

END OF SECTION

SECTION 08-1000

METAL DOORS AND FRAMES AND HARDWARE

PART 1 – GENERAL

1.01 GENERAL REQUIREMENTS

A. Drawings and general provisions of the Contract, including General and Supplementary Conditions and other Division 01 Specification Sections, apply to this Section.

1.02 SCOPE OF WORK

A. Provide metal door, frame, and hardware at stair penthouse.

1.03 RELATED WORK SPECIFIED ELSEWHERE

A. Section 02 5000 – Selective Removals

B. Section 06 1000 – Rough Carpentry.

C. Section 07 5000 – Thermoplastic Membrane Roofing.

D. Section 07 6000 – Sheet Metal Cladding and Flashing

E. Section 07 9200 – Joint Sealants.

1.04 REFERENCES

A. Comply with applicable references of the following standards. Where these standards conflict with other specified requirements, the most restrictive requirements shall govern.

1. Comply with the requirements of Recommended Specifications for Standard Steel Doors and Frames (ANSI/SDI-100) sponsored by the Steel Door Institute (SDI).

2. Americans with Disabilities Act (ADA)

3. Door and Hardware Institute (DHI): Recommended locations for Builders Hardware

4. Materials and Finishes Standard: ANSI/BHMA A156.18 – American National Standard for Materials and Finishes

1.05 SUBMITTALS

A. Product Data: Include construction details, material descriptions, core descriptions, label compliance, fire-resistance rating, temperature-rise ratings, and finishes for each type of steel door and frame specified.

B. Product Test Reports: Based on evaluation of comprehensive fire tests performed by a qualified testing agency, for each UL rated steel door and frame.

C. Shop Drawings:

1. Show details, elevations, and construction for each door system and location. Minimum provide full scale head, jamb, and sill sections. Include installation requirements for Finish Hardware (including cutouts and reinforcements), attachments and accessory items. Shop drawings must indicate door opening, swings, materials, profiles, assembly methods, fastening methods, accessories, and schedule of finishes. Shop drawings to show adjacent construction.

D. Finish Samples: Sample of each material with specified finish.

1.06 PROJECT CONDITIONS

A. Field Measurements: Verify actual dimensions of openings by field measurements before fabrication.

1.07 QUALITY CONTROL AND QUALITY ASSURANCE

A. Perform all work in strict accordance with all applicable laws and regulations of the building code and with all other authorities having jurisdiction. All such requirements shall take precedence over the requirements of the Specifications except where the requirements of the Specifications are more exacting or stringent.

B. Contractor Qualifications: Engage an experienced installer who has a minimum of five years' experience with successfully completed work described in this Section.

C. Source Limitations: Obtain steel doors and frames through one source from a single manufacturer. Comply with ANSI A250.8, unless more stringent standards are indicated.

D. Fire-Rated Door and Frame Assemblies: Wherever a fire-resistance classification is shown or scheduled for steel doors and frames; provide fire-rated units that have been tested as fire-door assemblies, and comply with National Fire Protection Association (NFPA) Standard No. 80 and these specifications. Identify each door and frame with a metal UL, FM, or WHI label. Indicate that applicable fire class on the door label. Rivet or weld labels on the hinge edge of door and jamb rabbet of frame. If continuous hinges are specified, rivet or weld labels on the header rabbet of frame and on top exposed edge of door. Locate labels as close to hinge as possible.

E. Certification: Affidavit by door manufacturer certifying that each door meets the specified requirements and standards.

1.08 DELIVERY, STORAGE, AND HANDLING

A. Before shipping doors to project site, the fabricator shall inspect each piece to assure that it meets the dimensional tolerance and appearance criteria. Deliver doors and

frames palletized, wrapped, or crated to provide protection during transit and Project-site storage. Do not use nonvented plastic.

B. Deliver welded frames with two removable spreader bars across bottom of frames, tack welded to jambs and mullions.

1.09 WARRANTY

A. Guarantee all work under this Section in a document. State that if, within two years after the Date of Substantial Completion of the Work, any of the work of this Section is found to be defective or not in accordance with the Contract Documents, the Contractor shall correct it promptly after receipt of a written notice from the Owner to do so, unless the Owner has previously given the Contractor a written acceptance of such condition. Also, state that the Contractor shall bear all costs incurred by the Owner, including reasonable attorney's fees, to enforce compliance with the obligations of this Guarantee. The obligation of these Guarantees shall run directly to the Owner and may be enforced by the Owner against the Contractor, shall survive the termination of the Contract, and shall not be limited by conditions other than this Contract.

PART 2 – PRODUCTS

2.01 MANUFACTURERS

A. Available Manufacturers: Subject to compliance with requirements, manufacturers offering products that may be incorporated into the Work include, but are not limited to, the following:

1. CURRIES Company; an ASSA ABLOY Group Company.

2. Pioneer Industries, Inc.

3. Kewanee Corporation (The)

4. Steelcraft; an Ingersoll-Rand company

2.02 MATERIALS

A. Cold-Rolled Steel Sheet: ASTM A 1008/A 1008M, Commercial Steel (CS), Type B; suitable for exposed applications.

B. Hot-Rolled Steel Sheet: ASTM A 1011/A 1011M, Commercial Steel (CS), Type B; free of scale, pitting, or surface defects; pickled and oiled.

C. Frame Anchors: ASTM A 879/A 879M, Commercial Steel (CS), 40Z coating designation; mill phosphatized.

D. Inserts, Bolts, and Fasteners: Hot-dip galvanized according to ASTM A 153/A 153M.

E. Mineral-Fiber Insulation: ASTM C 665, Type I (blankets without membrane facing); consisting of fibers manufactured from slag or rock wool with 6- to 12-lb/cu ft density;

with maximum flame-spread and smoke-development indexes of 25 and 50, respectively; passing ASTM E 136 for combustion characteristics.

2.03 STANDARD STEEL DOORS

A. General: Provide doors of design indicated, not less than thickness indicated; fabricated with smooth surfaces, without visible joints or seams on exposed faces, unless otherwise indicated. Comply with ANSI A250.8.

1. Design and Thickness: Flush design doors, seamless, hollow construction, 1-3/4 in. thick.

2. Sound Deadening (ASTM E90): Minimum Sound Transmission Class (STC) of 25

3. Door Edges: Bevel lock stile edge of single acting hinged doors 1/8 in. in 2 in.

4. Double acting doors shall have rounded edges, approximately 2-1/4 in. radius.

5. Fire Rated Doors: Door tested to meet 2 hr fire rating.

6. Fire Door Core: As required to provide fire-protection and temperature-rise ratings indicated.

7. Top and Bottom Edges: Closed with flush or inverted 0.042 in.-thick end closures or channels of same material as face sheets.

8. Tolerances: Comply with SDI 117, "Manufacturing Tolerances for Standard Steel Doors and Frames."

B. Hardware Reinforcement: Fabricate according to ANSI/SDI A250.6 with reinforcing plates from same material as door face sheets.

C. Fabricate concealed stiffeners and hardware reinforcement from either cold- or hot-rolled steel sheet.

2.04 STANDARD STEEL FRAMES

A. General: Comply with ANSI A250.8 and with details indicated for type and profile.

B. Hardware Reinforcement: Fabricate according to ANSI/SDI A250.6 with reinforcement plates from same material as frames.

C. Furnish steel frames for doors, and other openings wherever shown, of size and profile as specified or shown. Construction: Full-welded unit construction, with corners mitered and continuously welded full depth and width of frame, unless otherwise specified or shown. Knock-down type frames will not be accepted.

D. Fixed Stops: Integral 5/8 in. stop unless otherwise shown.

E. Removable Beads: Removable steel beads secured with machine screws. Form corners with butted hairline joints.

2.05 FABRICATION

A. Fabricate hollow metal work to be rigid and free of defects, warp, or buckle. Accurately form metal to required sizes and profiles, with minimum radius for thickness of metal. Where practical, fit and assemble units in manufacturer's plant. To ensure proper assembly at Project site, clearly identify work that cannot be permanently factory assembled before shipment.

B. Tolerances: Fabricate hollow metal work to tolerances indicated in SDI 117.

C. Hollow Metal Doors:

1. Astragals: Provide overlapping astragal on one leaf of pairs of doors where required by NFPA 80 for fire-performance rating or where indicated. Extend minimum 3/4 in. beyond edge of door on which astragal is mounted.

D. Hollow Metal Frames: Where frames are fabricated in sections due to shipping or handling limitations, provide alignment plates or angles at each joint, fabricated of same thickness metal as frames.

1. Welded Frames: Weld flush face joints continuously; grind, fill, dress, and make smooth, flush, and not visible.

2. Provide countersunk, flat- or oval-head exposed screws and bolts for exposed fasteners unless otherwise indicated.

3. Anchors: as shown on approved shop drawings

E. Fabricate concealed stiffeners, edge channels, and hardware reinforcement from either cold- or hot-rolled steel sheet.

F. Hardware Preparation: Factory prepare hollow metal work to receive templated mortised hardware; include cutouts, reinforcement, mortising, drilling, and tapping.

1. Locate hardware as indicated, or if not indicated, according to ANSI/SDI A250.8.

2. Reinforce doors and frames to receive nontemplated, mortised and surface-mounted door hardware.

3. Comply with applicable requirements in ANSI/SDI A250.6 and ANSI/DHI A115 Series specifications for preparation of hollow metal work for hardware.

2.06 STEEL FINISHES

A. Prime Finish: Apply manufacturer's standard primer immediately after cleaning and pretreating.

B. Finish System: Factory finished with custom color selected by Owner.

2.07 DOOR AND FRAME FABRICATION

A. Fabricate units to be rigid, neat in appearance, and free from dents, warp, and buckle.

B. Clearances: Provide single swing doors with not more than 1/8 in. clearance at jambs, heads, and sills. Clearance dimensions are nominal and subject to a tolerance of plus or minus 1/32 in.

C. Prepare units to receive mortised and concealed finish hardware, including cutouts and reinforcing. Reinforce units to receive surface applied finish hardware to be field applied. Drill and tap units to receive finish hardware, except surface applied hardware.

2.08 DOOR AND FRAME HARDWARE

1. Hinges: Five knuckle full mortise butt hinge, stainless steel. Provide 4 hinges.

2. Door Lever Handle with lock and with Latch Strike, stainless steel.

3. Closer: LCN Smoothee heavy-duty closer.

4. Lock: Sargent 8200 Series Mortise Lock, Storeroom Function, cylinder provided by UConn.

2.09 FASTENINGS

1. Pack hardware with screws, through bolts, and other fastening devices, required for proper application. Fastenings shall harmonize with the material and finish.

2. Provide machine screws for hardware secured to metal; self-tapping screws are not acceptable.

3. Provide undercut (shallow head) screws where necessary for proper seating, with manufacturer's standard Phillips heads, except where security head screws are specified.

4. Provide security head fasteners for exposed items of hardware (except full mortise hinges).

B. Accessories, Brackets, and Plates

1. Sweep: Neoprene or PVC door sweep

2. Weatherstripping: Hollow bulb shape, neoprene, fastened to frame. Provide different geometry for jambs and head.

3. Water deflector: Aluminum water deflector at door threshold (attached to door) and above doors (attached to frame).

4. Threshold: Fluted saddle threshold, aluminum, 1” in height, with integral bulb gasket.

5. Strikes: Strikes are to fit individual lockset function. Universal or generic strikes that fit a variety of lockset functions are not acceptable. Furnish curved lip strikes with wrought boxes.

6. Provide compression rings and spacers as required to achieve proper spacing relationship between cylinder and face of door.

7. Provide brackets, plates, and special templates to mount door closers in combination with overhead stops and holders, on narrow top rails, transom mountings, and for special ceiling and jamb conditions.

PART 3 – EXECUTION

3.01 EXAMINATION

A. Examine substrates, areas, and conditions, with Installer present, for compliance with requirements for installation tolerances and other conditions affecting performance of the Work.

B. Examine roughing-in for embedded and built-in anchors to verify actual locations before frame installation.

C. Proceed with installation only after unsatisfactory conditions have been corrected.

3.02 DOOR AND FRAME INSTALLATION

A. General: Install hollow metal work plumb, rigid, properly aligned, and securely fastened in place; comply with Drawings and manufacturer's written instructions. Comply fully with manufacturer’s instructions for assembling, installing, and adjusting products.

   a. Hollow Metal Frames: Install hollow metal frames of size and profile indicated. Comply with ANSI/SDI A250.11.

B. Set frames accurately in position, plumbed, aligned, and braced securely until permanent anchors are set. After wall construction is complete, remove temporary braces, leaving surfaces smooth and undamaged.

   1. At fire-protection-rated openings, install frames according to NFPA 80.

   2. Where frames are fabricated in sections because of shipping or handling limitations, field splice at approved locations by welding face joint continuously; grind, fill, dress, and make splice smooth, flush, and invisible on exposed faces.

3. Install door silencers in frames before grouting.

4. Remove temporary braces necessary for installation only after frames have been properly set and secured.

5. Check plumbness, squareness, and twist of frames as walls are constructed. Shim as necessary to comply with installation tolerances.

C. Installation Tolerances: Adjust hollow metal door frames for squareness, alignment, twist, and plumb to the following tolerances:

1. Squareness: Plus or minus 1/16 in., measured at door rabbet on a line 90º from jamb perpendicular to frame head.

2. Alignment: Plus or minus 1/16 in., measured at jambs on a horizontal line parallel to plane of wall.

3. Twist: Plus or minus 1/16 in., measured at opposite face corners of jambs on parallel lines, and perpendicular to plane of wall.

4. Plumbness: Plus or minus 1/16 in., measured at jambs at floor.

D. Hollow Metal Doors: Fit hollow metal doors accurately in frames, within clearances specified below. Shim as necessary.

1. Non-Fire-Rated Standard Steel Doors:

a. Jambs and Head: 1/8 in. plus or minus 1/16 in.

b. Between Edges of Pairs of Doors: 1/8 in. plus or minus 1/16 in.

c. Between Bottom of Door and Top of Threshold: Maximum 3/8 in.

d. Between Bottom of Door and Top of Finish Floor (No Threshold): Maximum 3/4 in.

2. Fire-Rated Doors: Install doors with clearances according to NFPA 80.

E. Drill and tap doors and frames to receive surface applied hardware.

F. Factory Finished Doors: Field touch-up and restore finishes damaged during preparation or installation with same material.

3.03 HARDWARE INSTALLATION

A. Install hardware in accordance with the manufacturer’s printed instructions and adjust for smooth operation.

1. Installation Sequence: Use proper installation sequence.

2. Template door closers for maximum door swing by wall placement and jamb conditions. Where overhead stop prevents door from swinging to wall, template closer to exceed degree of opening allowed by overhead stop.

B. Use proper tools and methods to prevent scratches, burrs, or other defacement.

C. After installation, cover hardware with protective cloth or paper to prevent damage during remaining construction. Remove protection upon completion.

D. Adjust existing related hardware as required for the proper operation of all the hardware.

1. Where items of finished hardware will be surfaced mounted to existing steel frames, continuously weld to the frame a 1/8 inch thick steel plate of sufficient size to properly reinforce frame. Drill and tap plate to receive machine screws.

2. Coordinate installation of surface mounted hardware with weather stripping requirements to provide full coverage weather seal.

E. Locations

1. Hinges: Top hinge 5 in. from jamb rabbet to top edge of barrel; bottom hinge 10 inches from bottom edge of barrel to finished floor; intermediate hinges centered between top and bottom hinges.

2. Knobs and Levers: Center line 3 ft-2 in. from finished floor.

3. Door Pulls: Center line 3 ft-2 in. from finished floor.

3.04 ADJUSTING AND CLEANING

A. Final Adjustments: Check and readjust operating hardware items immediately before final inspection. Leave work in complete and proper operating condition. Remove and replace defective work, including hollow metal work that is warped, bowed, or otherwise unacceptable.

END OF SECTION

SECTION 09 2000

PAINTING

PART 1 – GENERAL

1.01 GENERAL REQUIREMENTS

A. Drawings and general provisions of the Contract, including General and Supplementary Conditions and other Division 01 Specification Sections, apply to this Section.

1.02 SCOPE OF WORK

A. Clean, remove all loose paint at the steel mechanical platform beams. Apply primer and finish coating.

B. Prepare CMU interior surfaces and apply primer and finish coat to match adjacent surfaces.

1.03 RELATED WORK SPECIFIED ELSEWHERE

A. Section 02 5000 – Selective Removals

B. Section 04 5000 – Unit Masonry

C. Section 05 5000 - Miscellaneous Metals

D. Section 07 5000 – Thermoplastic Membrane Roofing.

E. Section 07 9200 – Joint Sealants.

1.04 SUBMITTALS

A. General: Refer to Division 1 for submittal provisions and procedures.

B. Certifications by the producers of the materials that all materials supplied comply with all the requirements of the referenced standards and that all materials are suitable for the use specified herein.

C. Manufacturer’s product data and installation recommendations.

D. Safety Data Sheets (SDSs) for each material where appropriate.

E. Manufacturer’s Standard Color Chart for proposed paint system illustrating range of colors and textures available.

F. Color samples of finish coating for Owner’s approval. Minimum sample size 6 in. x 6 in. Submit each color sample showing full range of color and gloss variation. Provide samples on actual substrate to be painted.

G. Manufacturer's Instructions: Provide a copy of the manufacturer's application instructions and recommendations and indicate specific surface preparation procedures and substrate conditions applicable to this project.

1.05 REFERENCES

A. The following references are incorporated into these Specifications. These written Specifications take precedence over incorporated references.

1. ASTM D16 - Definitions of Terms Relating to Paint, Varnish, Lacquer, and Related Products

2. NACE (National Association of Corrosion Engineers) – Industrial Maintenance Painting

3. NPCA (National Paint and Coatings Association) – Guide to U.S. Government Paint Specifications

4. PDCA (Painting and Decorating Contractors of America) – Painting – Architectural Specifications Manual

5. SSPC (Society of Protective Coating) – Steel Structures Painting Manual

1.06 DEFINITIONS

A. Conform to ASTM D16 for interpretation of terms used in this Section.

1.07 QUALIFICATIONS

A. Applicator: Company specializing in performing the work of this Section with a minimum of 5 years of documented experience and approved by the paint manufacturer.

1.08 REGULATORY REQUIREMENTS

A. Conform to all applicable codes for flame- and smoke-rating requirements for finishes.

B. Provide products which comply with all state and local regulations controlling the use of volatile organic compounds (VOC's)

1.09 MOCKUPS

A. Mockups: Perform the following mockups on the building, at locations approved by the Engineer in advance. Notify the Engineer at least 48 hours before starting the work on each mockup. Reconstruct each mockup as many times as necessary to meet the approval of the Engineer. Do not proceed with any part of the work before the mockup is approved by the Engineer. Mockups will be used to establish both technical and aesthetic standards for the remainder of the project. Once the mockup is approved, the mockup may become part of the finished work.

1. Prepare and paint interior CMU at one window location.

2. 10 LF of preparation and painting of steel equipment platform

B. Mockups must be prepared by scheduled installer. Include all required flashing, membranes, fasteners and other components as required. Note that flashing installation mockups must be in place and approved before subsequent installation can continue.

1.10 DELIVERY, STORAGE, AND HANDLING

A. Deliver all material to the site in the manufacturer's labeled, unbroken containers. Keep materials dry at all times. Store all materials on wooden pallets in a well-ventilated place. Cover all materials with a canvas tarpaulin, not plastic, on top and all sides, to the ground. Store all materials away from sparks and flames.

B. Deliver products to site in sealed and labeled containers; inspect to verify acceptability.

C. Container label to include manufacturer's name, type of paint, brand name, lot number, brand code, coverage, surface preparation, drying time, cleanup requirements, color designation, and instructions for mixing and reducing.

D. Store paint materials at a minimum ambient temperature of 45°F and a maximum of 90°F, in a ventilated area, or as required by manufacturer's instructions.

1.11 ENVIRONMENTAL REQUIREMENTS

A. Ambient Air Temperature, Relative Humidity, Ventilation, and Surface Temperature: Comply with paint manufacturer’s published product data sheet or other printed product instructions.

B. If paint manufacturer does not provide environmental requirements, use the following:

1. Ambient Air Temperature: Between 50ºF and 75ºF.

2. Relative Humidity: Below 75%.

3. Ventilation: Maintain the painting environment free from fumes and odors throughout the Work of this Section.

4. Surface Temperature: At least 5ºF above the surface dewpoint temperature.

C. Maintain environmental requirements throughout the drying period.

D. Provide lighting level of 80 lm/ft^2 (foot-candles) measured mid-height at substrate surface during surface preparation work.

1.12 WARRANTY

A. Guarantee all work under this Section in a document stating that if, within 2 years after the Date of Substantial Completion of the Work, any of the work of this Section is found to be defective or not in accordance with the Contract Documents, the Contractor shall, at its sole cost and expense, correct it promptly after receipt of a written notice from the Owner to do so, unless the Owner has previously given the Contractor a written acceptance of such condition. Also, state that the Contractor shall bear all costs incurred by the Owner, including reasonable attorney's fees, court costs, and expert witness and consultant fees, to enforce Contractor's compliance with the obligations of this Guarantee. The obligations of this Guarantee shall run directly to the Owner and its successors and assigns and may be enforced by the Owner and its successors and assigns against the Contractor, shall survive the termination of the Contract, and shall not be limited by conditions other than this Contract.

PART 2 – PRODUCTS

2.01 GENERAL MATERIALS

A. Cleaning Solvents: Low toxicity with flash point in excess of 100 degrees F.

B. Masking Tape: Removable paper or fiber tape, self-adhesive and nonstaining.

C. Mineral Spirits: Low odor type recommended by finish paint manufacturer.

D. Paint Stripper: As recommended by finish paint manufacturer.

E. Stain Blocker, Primer-Sealer: As recommended by finish paint manufacturer.

F. Turpentine: ASTM D 13.

2.02 PAINT GENERAL

A. Material Compatibility:

1. Systems could fail if paints used for individual coats are incompatible. MPI's paint systems match primers and topcoats and take compatibility into consideration.

2. Provide materials for use within each paint system that are compatible with one another and substrates indicated, under conditions of service and application as demonstrated by manufacturer, based on testing and field experience.

3. For each coat in a paint system, provide products recommended in writing by manufacturers of topcoat for use in paint system and on substrate indicated.

B. Material Quality: Provide manufacturer's best-quality paint material of the various coating types specified. Paint-material containers not displaying manufacturer's product identification will not be acceptable.

C. Thinners: Use only thinners approved by paint manufacturer and use only within recommended limits and when approved in advance by the Engineer.

D. Colors: As selected by Owner from manufacturer's full range or custom colors, as indicated in a color schedule.

2.03 METAL PAINT SYSTEM

A. Primer: Shall be one full coat of RD Elastometal primer by RD Coatings USA, applied to all cleaned exposed metal surfaces at a dry-film thickness of 6.0 to 7.0 mils.

B. Finish Coat: Shall be two full coats of RD-Metal Unicoat Green by RD Coatings USA, applied to primed metal surfaces at a dry-film thickness of 3.0 to 3.5 mils per coat. Color as selected by Owner.

C. Accessory Materials: Other materials not specifically indicated, but required to achieve the finishes specified, of commercial quality conforming to the written recommendations of the primer and coating manufacturer.

2.04 INTERIOR CMU PAINT SYSTEM

A. Primer and Paint: Provide a 3-coat paint system to match existing type, color and sheen.

PART 3 – EXECUTION

3.01 EXAMINATION

A. Verify that substrate conditions are ready to receive work as instructed by the product manufacturer. Report any condition that may potentially affect proper application. Beginning of painting work means that the Contractor accepts existing conditions.

3.02 PROTECTION

A. Cover and protect surfaces to be painted, adjacent surfaces not to be painted, and removed furnishings and equipment from existing paint removals, airborne sanding particles, cleaning fluids and paint spills using suitable drop cloths, barriers and other protective devices.

1. Remove and replace removable hardware, lighting fixtures, telephone equipment, other devices and cover plates over concealed openings in substrates to be painted.

a. Cover and neatly mask permanently installed hardware, lighting fixtures, cover plates and other devices which cannot be removed and are not scheduled for painting.

2. Schedule and coordinate surface preparations so as not to interfere with work of other trades or allow airborne sanding dust particle to fall on freshly painted surfaces.

3. Provide adequate natural or mechanical ventilation to allow surfaces to be prepared and painted in accordance with product manufacturer's instructions and applicable regulations.

4. Provide and maintain "Wet Paint" signs, temporary barriers and other protective devices necessary to protect prepared and freshly painted surfaces from damages until Work has been accepted.

3.03 SURFACE PREPARATION

A. Clean and prepare surfaces to be painted in accordance with specifications, paint manufacturer's approved product data sheets and printed label instructions. In the event of conflicting instructions or directions, the more stringent requirements shall apply.

1. Cleaners: Use only approved products manufactured or recommended by finish paint manufacturer. Unless otherwise recommended by cleaner manufacturer, thoroughly rinse with clean water to remove surface contaminants and cleaner residue.

B. Surfaces:

1. Existing Structural Steel:

a. Prepare existing steel to be painted by cleaning in accordance with Structural Steel Painting Council (SSPC) standards as required by the manufacturer.

2. Galvanized Metal:

a. Allow new galvanized surfaces to weather as long as possible before cleaning. Remove surface contaminants using clean rags and petroleum spirits.

b. Remove "white rust" using appropriate solvent and, if necessary, wire brushing or sanding.

c. Use appropriate Structural Steel Painting Council Standard (SSPC) standard to clean steel substrates where galvanized protection has been removed.

3. CMU:

a. Remove surface dirt, stains, markings, discolorations and other contaminants using finish paint manufacturer's recommended cleaning methods and solvents.

3.04 MIXING

A. Materials Preparation: Mix and prepare paint materials according to manufacturer's written instructions.

1. Maintain containers used in mixing and applying paint in a clean condition, free of foreign materials and residue.

2. Stir material before application to produce a mixture of uniform density. Stir as required during application. Do not stir surface film into material. If necessary, remove surface film and strain material before using.

3. Use only thinners approved by paint manufacturer and only within recommended limits.

3.05 APPLICATION

A. Environmental Conditions: The following standards apply unless manufacturer requirements are more stringent.

1. Water-based Paints: Apply when surface temperatures will be 50 degrees Fahrenheit to 90 degrees Fahrenheit throughout the drying period.

2. Other Paints: Apply when surface temperatures will be 45 degrees Fahrenheit to 95 degrees Fahrenheit throughout the drying period.

3. Apply exterior paints during daylight hours free from rain, snow, fog and mist when ambient air conditions are more than 5 degrees above the surface dewpoint temperature and relative humidity less than 85 percent.

a. When exterior painting is allowed or required during nondaylight hours, provide portable outdoor weather recording station with constant printout showing hourly to diurnal air temperature, humidity, and dewpoint temperature.

4. Exterior Cold Weather Protection: Provide heated enclosures necessary to maintain specified temperature and relative humidity conditions during paint application and drying periods.

B. Install approved paints where specified, or shown on the drawings, and to match approved field examples.

1. Paint Applicators: Brushes, rollers or spray equipment recommended by the paint manufacturer and appropriate for the location and surface area to be painted.

a. Approved minimum wet and dry film thicknesses shall be the same for different application methods and substrates.

C. Paint Type Coats To Be Applied: Unless specified otherwise by finish paint manufacturer's product data sheet, assume one primer coat and two finish coats of paint.

D. Apply in accordance with manufacturer's written instructions.

E. Apply the primer to all panel surfaces; allow primer to fully cure.

F. Apply finish paint over the primer. Leave the painted surfaces free of excess brush marks or build-up of paint, with no gaps in coverage on any coat. If undercoats or other conditions show through final coat, apply additional coats until cured film has uniform coating finish, color, and appearance.

G. Apply all coat thicknesses recommended by the paint manufacturer and as approved during mock-up.

3.06 ADJUSTING AND CLEANING

A. Reinstall removed items after painting has been completed.

1. Restore damaged items to a condition equal to or better than when removed. Replace damaged items that cannot be restored.

B. Touch up and restore damaged finish paints. Touch up and restoration paint coats are in addition to the number of specified finish paint coats.

C. Remove spilled, splashed, or spattered paint without marring, staining or damaging the surface. Restore damaged surfaces to the satisfaction of the Designer.

D. Remove temporary barriers, masking tape, and other protective coverings upon completion of painting, cleaning and restoration work.

END OF SECTION

LIMITED ASBESTOS BULK SAMPLING AND LEAD-BASED PAINT SURVEY REPORT

for

University of Connecticut (UCONN)
Avery Point Campus
Academic Building Partial Roof Replacement
1084 Shennecossett Road
Groton, Connecticut 06340

Prepared For:

Jay Johnston
Resource Planner
UCONN
Facilities Operations & Building Services
25 Ledoyt Road, Unit 3252
Storrs, Connecticut 06269

Prepared By:

Langan CT, Inc.
555 Long Warf Drive
New Haven, CT 06511

Matthew A. Myers
Senior Hazmat Specialist

14 May 2018
140183002

LANGAN

TABLE OF CONTENTS

Page No.

ACRONYMS ..... **ii**

1.0 INTRODUCTION **1**

2.0 ASBESTOS-CONTAINING MATERIALS (ACM) **2**

3.0 LEAD-BASED PAINT (LBP) XRF SCREENING **5**

4.0 CONCLUSIONS AND RECOMMENDATIONS **7**

5.0 LIMITATIONS **7**

LIST OF TABLES

Table 1 Summary of Asbestos-Containing Materials
Table 2 Summary of Non-Asbestos-Containing Materials
Table 3 XRF Lead-Based Paint Screening Results

LIST OF APPENDICES

Appendix A Asbestos Analytical Laboratory Sample Results and Chain of Custody
Appendix B Roof Diagram
Appendix C Langan Certifications and Accreditations

ACRONYMS

US EPA	United States Environmental Protection Agency
AHERA	Asbestos Hazard Emergency Response Act
OSHA	Occupational Safety and Health Administration
CFR	Code of Federal Regulation
NESHAPS	National Standards for Hazardous Air Pollutants
HUD	Housing and Urban Development
CT DPH	Connecticut Department of Public Health
RCRA	Resource Conservation and Recovery Act
PLM	Polarized Light Microscopy
TEM	Transmission Electron Microscopy
ACM	Asbestos-Containing Materials
LBP	Lead-Based Paint
PCB	Polychlorinated Biphenyls
Sq. ft./SF	Square Feet
Ln. ft./LF	Linear Feet
mg/cm^2	Milligrams per square centimeter
XRF	X-ray Fluorescence
AAS	Atomic Absorption Spectrometry

1.0 INTRODUCTION

Langan CT, Inc. (Langan) prepared this limited Asbestos Bulk Sampling and Lead-Based Paint Survey Report on behalf of the University of Connecticut. The work was performed under the contract for on-call consultant services – hazardous material/hygiene assessment design services. This survey was conducted at the Avery Point Campus Academic Building. The objective of this limited asbestos bulk sampling survey is to identify the presence or absence of accessible asbestos-containing materials (ACM) so these materials can be properly quantified and assessed in support of the partial roof replacement project.

Details pertaining to this survey are summarized in the following table.

PROJECT INFORMATION

Client Name:	Jay Johnston Resource Planner UCONN Facilities Operations & Building Services 25 Ledoyt Road, Unit 3252 Storrs, Connecticut 06269	Property Visit Date:	7 May 2018
Professional's project #:	140183002	Construction Dates:	Circa 1940
Consultant's Project Manager:	Matthew A. Myers	No. Buildings:	One
Phone No.:	203-562-5571	No. of Stories:	Three
Email:	mmyers@langan.com	Bldgs. Gross Footage:	50,000 Square Feet
Property Address:	1084 Shennecossett Road		
UCONN Contract #	004-5-NV-103120	P.O. #	189656
Project/Work Order #	180424-030281-001	Task Order	#1
Property Town, State:	Groton, Connecticut	Property Use:	University of Connecticut – Avery Point Campus

The following sections summarize hazardous building materials findings for the areas surveyed.

2.0 ASBESTOS-CONTAINING MATERIALS (ACM)

Terminology

Suspect Asbestos-Containing Materials

Asbestos was historically used in certain types of construction and building materials. Until a material is examined by using polarized light microscopy (PLM) or a similar technique, the building material is considered as a suspect asbestos-containing material. A few examples of these materials include wall and ceiling plasters, sheetrock and taping compound, flooring materials, ceiling panels, thermal system insulation, fireproofing insulation, roofing materials, adhesives, damp-proofing/waterproofing materials, caulking and glazing compounds, etc. Any suspect ACM and/or building material of unknown asbestos content should be assumed to be an asbestos containing material and handled and disposed of accordingly. Demolition, renovation, maintenance or daily activities should not disturb building materials that are found to contain asbestos, assumed to contain asbestos or that have not been tested for possible asbestos content.

Asbestos–Containing Material

A material with an asbestos concentration greater than 1% by weight is considered as ACM by the United States Environmental Protection Agency (US EPA). Thus, a material which contains asbestos in concentrations greater than 1% by weight is considered "positive" while materials that do not contain asbestos or asbestos is detected in concentrations equal to or less than 1% by weight are considered "negative".

Regulatory Guidelines and Requirements

Federal

In accordance with the Clean Air Act (CAA), the U.S. Environmental Protection Agency (EPA) established National Emission Standards for hazardous Air Pollutants (NESHAP) to protect the public from exposure to airborne pollutants. Asbestos was one of the air pollutants, which was addressed under the NESHAP 40 CFR Part 61. The purpose of asbestos NESHAP regulations is to protect the public health by minimizing the release of asbestos when facilities, which contain ACM, are being renovated or demolished. EPA is responsible for enforcing regulations related to asbestos during renovation and demolition activities, however, the CAA allows the EPA to

delegate this authority to State and Local Agencies. Even after EPA delegates responsibility to a state or Local agency, EPA retains the authority to oversee agency performance and to enforce NESHAP regulations as appropriate. OSHA considers any amount of asbestos to be regulated.

State

Asbestos in Connecticut is regulated by the State of Connecticut Department of Public Health (CT DPH), under Standards for Asbestos Abatement – Section 19a-333a-1 through 16 of Regulations of Connecticut State Agencies (RCSA) and Licensing and Training Requirements for Persons Engaged in Asbestos Abatement and Asbestos Consulting Services – Section 20-440-1 through 9 and Section 20-441 of RCSA.

Asbestos Survey

During this survey, suspect ACM were separated into three USEPA categories. These categories are: thermal system insulation (TSI), surfacing materials and miscellaneous materials. TSI includes all materials used to prevent heat gain or loss or water condensation on mechanical systems. Typical examples of TSI are boiler, duct and tank insulation, pipe and pipe fitting insulation. Surfacing materials are sprayed, troweled or otherwise applied to an existing surface and common uses are fireproofing, decorative and acoustical plaster applications. Miscellaneous materials include all ACM not listed as TSI or surfacing and include: flooring materials, ceiling tiles, adhesives, caulking and glazing compounds, damp-proofing/tars/mastics, roofing materials, transite cement board, sink undercoating, sheetrock and taping compounds, cove base materials and other materials. State of Connecticut DPH licensed asbestos inspectors Matthew Myers (#000041) and Brian Quinlan (#000921) performed the survey.

ACM Results Summary

Bulk sampling results are included in Table 1 2 below. Analytical asbestos laboratory data can be found in Appendix A.

As required by the US EPA, samples were analyzed by individual layers (e.g. floor tile & the associated mastic were analyzed as two separate samples, rough and finish coat plasters, etc.). Bulk samples of the suspect asbestos-containing materials (ACM) were analyzed using the Polarized Light Microscopy (PLM) analytical methodology in accordance with EPA Protocol 600/R-93/116 and Non-friable Organically Bound (NOB) (e.g. flooring materials, roofing materials, mastics) may have been additionally analyzed using PLM Point Count and/or TEM.

The samples were analyzed by EMSL of Cinnaminson, New Jersey accredited by the National Voluntary Laboratory Program (NVLAP) and American Industrial Hygiene Association (AIHA).

Utilizing the US EPA sampling protocols and criteria, the following materials were determined to be **ACM**:

Table 1 – Summary of Asbestos-Containing Materials

Material	Location	% Asbestos and Sample ID	Estimated Quantity of ACM
Penetration, Perimeter, Other Flashing Materials – Miscellaneous Materials	Flat Roofs	ACM 3.8-30% Chrysotile 050705A 050706A,C	2,170 Square Feet
Roof Gutter Flashing Materials – Miscellaneous Materials	Pitched Roof	ACM 5% Chrysotile 050708A	600 Square Feet
Black Tar Bottom Layer – Miscellaneous Material	Stair Roof	ACM 20% Chrysotile 050713A	400 Square Feet

Utilizing the US EPA protocol and criteria, the following materials were determined to be **non-ACM or <1% Asbestos**:

Table 2 – Summary of Non-Asbestos-Containing Materials

Material	Location	Sample ID
Core Materials, Including Tar on Old Skylights – Miscellaneous Materials	Flat Roof Core	050701A,B – 050704A,B
Shingles and Black Tar Underneath – Miscellaneous Materials	Pitched Roof	050707A-D
Gray Caulking on Block Under Shingled Roof at Flashing Seam– Miscellaneous Material	Pitched Roof	050709A,B

Material	Location	Sample ID
Black Rubber, Adhesives, Black Seam Sealant, and Gray Paper on Iso-board – Miscellaneous Materials (see note below)	Stair Roof	050710A,B – 050712A,B 050714A,B
Duct Materials – Upper and Bottom Layers of Rubber, Adhesive, and White Seam Sealants – Miscellaneous Materials	Duct on Roof	050715A,B – 050718A,B

Note: Materials abutting the asbestos containing bottom tar layer are considered contaminated and should be disposed of as ACM if it is to be removed during the re-roofing activities.

DISCLAIMERS: Some locations/materials may not have been sampled during this survey due to location and damage required to inspect certain materials/areas. The survey was limited to the "T" shaped rear roofing, stairwell and pitched roof located on the "T" shaped roof. The lower roofs attached to this building and front roofing materials were not included.

Inaccessible/Hidden Materials – Suspect asbestos containing materials may exist behind ceiling and wall materials, trim, siding, soffit, skylights and roofing. The inspectors did not sample roof drain insulation or interior ceiling materials. Asbestos sampling was limited to accessible roofing materials. Metal covered exhaust stacks may have asbestos containing cement inside the covering.

Window Sealant Materials – Langan was instructed to not sample window sealant materials for possible asbestos content. If these materials are to be disturbed they must be assumed to contain hazardous substances.

3.0 LEAD-BASED PAINT (LBP) XRF SCREENING

A lead paint screening was performed in the building using an X-Ray Fluorescence (XRF) lead paint analyzer. Matthew Myers, a State of Connecticut DPH Certified Lead Inspector (#000191) performed the lead screening using a Niton XLp300.

LBP was identified at the following locations exceeding the HUD/EPA action level of equal to or greater than 1.0 mg/cm^2.

Table 3 – XRF Lead-Based Paint Screening Results

Survey ID #	Component	Substrate	Color	Test Location	Total Lead mg/cm^2	Results	Comments
01	**Calibration**	**--**	**--**	**--**	**1.0**	**--**	
02	**Calibration**	**--**	**--**	**--**	**1.1**	**--**	
03	**Window Sill**	**Wood**	**White**	**Exterior**	**1.4**	**Positive**	
04	**Window Casing**	**Wood**	**White**	**Exterior**	**4.2**	**Positive**	
05	**Window Sash**	**Wood**	**White**	**Exterior**	**1.3**	**Positive**	
06	**Mechanical Beam**	**Metal**	**Gray**	**Exterior**	**0.04**	**Negative**	
07	**Roof Flashing**	**Metal**	**Gray**	**Exterior**	**29.9**	**Positive**	
08	**Roof Flashing Paint**	**Roof**	**Gray**	**Exterior**	**0.1**	**Negative**	
10	**Calibration**	**--**	**--**	**--**	**0.9**	**--**	
11	**Calibration**	**--**	**--**	**--**	**1.0**	**--**	

Prior to demolition, some LBP building components (metal) may be segregated for recycling at an approved facility. TCLP lead waste characterization samples should be obtained from representative building materials prior to disturbing, removing and disposing of these materials.

Contractors should be aware that OSHA has not established a level of lead in a material below which 29 CFR 1926.62 does not apply. Contractor shall comply with exposure assessment criteria, interim worker protection and other requirements of the regulation as necessary to protect workers and occupants/residents.

The information in this report does not constitute a comprehensive lead inspection under the Connecticut Regulations, Section 19a-111-1 to 11. The inspection was an XRF lead screening utilizing an XRF and does not satisfy the testing requirements of US EPA's Renovation, Repair and Painting Rule (RRP) under 40 CFR 745.80 through 92. Reliance on this report for determining RRP or CT DPH applicability is not authorized by Langan.

4.0 CONCLUSIONS AND RECOMMENDATIONS

Langan provides the following conclusions and recommendations, based on the findings of this limited Asbestos Bulk Sampling and Lead-Based Paint Survey:

Non-friable ACM was identified in the accessible roofing materials that will be disturbed by this partial roof replacement project. Prior to demolition, the identified ACM must be properly removed and disposed in accordance with applicable federal, state and local regulations by a State of Connecticut DPH licensed asbestos abatement contractor or by a roofing contractor that has the proper EPA and OSHA training. A State of Connecticut licensed Asbestos Designer should create specifications and an Asbestos Project Monitor should perform project oversight in accordance with the federal and state regulations. Any additional suspect material that may be discovered during the project that is not listed in this report must be assumed to be an ACM until confirmed otherwise via laboratory testing.

Lead-Based paint was detected on the wooden window components. A TCLP lead waste characterization sample should be obtained from these building materials if they are to be removed and disposed. Metal LBP components (flashing) may be segregated for recycling at an approved facility.

Contractors should be aware that OSHA has not established a level of lead in a material below which 29 CFR 1926.62 does not apply. Contractor(s) shall comply with exposure assessment criteria, interim worker protection and other requirements of the regulation as necessary to protect workers and occupants/residents. All contractors must comply with all applicable local, State and Federal regulations, including but not limited to the lead OSHA regulations.

5.0 LIMITATIONS

The conclusions and recommendations presented in this report are professional opinions based solely upon Langan's visual observations, laboratory test data, and current regulatory requirements. These conclusions and recommendations are intended exclusively for the purpose stated herein, at the site indicated, and for the project indicated.

It is important to recognize that even the most comprehensive scope of services may fail to detect all hazardous materials that may be associated with the property. Therefore, Langan cannot act as insurers and cannot "certify" that all hazardous materials associated with the property have been identified, and no expressed or implied representation or warranty is included or intended in our report, except that our services were performed, within the limits prescribed by our client, with the customary thoroughness and competence of our profession.

PCB sampling of suspect building materials was not performed as part of this survey. Any suspect material that is not listed in this report must be assumed to contain asbestos, PCBs, lead, etc. until confirmed otherwise via laboratory testing.

\\langan.com\data\NHV\data0\140183002\Project Data_Discipline\Hazardous Building Materials\Survey Report\UCONN Limited Asbestos Bulk Sampling Report - Avery Point Academic Roof.doc

Appendix A

Asbestos Analytical Laboratory Sample Results and Chain of Custody

OrderID: 041813852

EMSL ANALYTICAL, INC.
LABORATORY • PRODUCTS • TRAINING

Asbestos Bulk Building Material Chain of Custody

EMSL Order Number (Lab Use Only): 041813852

EMSL ANALYTICAL, INC.
200 RARITAN 130 NORTH
CINNAMINSON, NJ 08077
PHONE: (800) 220-3675
FAX: (856) 786-5974

RECEIVED EMSL CINNAMINSON, NJ 18 MAY 9 AM 10:24

Company: Langan CT	**EMSL-Bill to:** ☐ Same ☒ Different If Bill to is Different note instructions in Comments** *Third Party Billing requires written authorization from third party*
Street: 555 Long Wharf Drive	
City: New Haven **State/Province:** CT	**Zip/Postal Code:** 06511 **Country:** USA
Report To (Name): Matthew Myers	**Telephone #:** 203.562.5771
Email Address: mmyers@langan.com	**Fax #:** 203.789.6142 **Purchase Order:**
Project Name/Number: 140183002	**Please Provide Results:** ☐ Fax ☒ Email
U.S. State Samples Taken: CT	**CT Samples:** ☐ Commercial/Taxable ☒ Residential/Tax Exempt

Turnaround Time (TAT) Options* – Please Check

☐ 3 Hour ☐ 6 Hour ☒ 24 Hour ☐ 48 Hour ☐ 72 Hour ☐ 96 Hour ☐ 1 Week ☐ 2 Week

*For TEM Air 3 hr through 6 hr, please call ahead to schedule. *There is a premium charge for 3 Hour TEM AHERA or EPA Level II TAT. You will be asked to sign an authorization form for this service. Analysis completed in accordance with EMSL's Terms and Conditions located in the Analytical Price Guide.

PLM - Bulk (reporting limit)

- ☒ PLM EPA 600/R-93/116 (<1%)
- ☐ PLM EPA NOB (<1%)
- Point Count ☒ 400 (<0.25%) ☐ 1000 (<0.1%) **If <3%**
- Point Count w/Gravimetric ☐ 400 (<0.25%) ☐ 1000 (<0.1%)
- ☐ NIOSH 9002 (<1%)
- ☐ NY ELAP Method 198.1 (friable in NY)
- ☐ NY ELAP Method 198.6 NOB (non-friable-NY)
- ☐ OSHA ID-191 Modified
- ☐ Standard Addition Method

TEM – Bulk

- ☒ TEM EPA NOB – EPA 600/R-93/116 Section 2.5.5.1 ** only analyze one of each type marked below
- ☐ NY ELAP Method 198.4 (TEM)
- ☐ Chatfield Protocol (semi-quantitative)
- ☐ TEM % by Mass – EPA 600/R-93/116 Section 2.5.5.2
- ☐ TEM Qualitative via Filtration Prep Technique If NO Asbestos Detected
- ☐ TEM Qualitative via Drop Mount Prep Technique

Other

☐ UCONN Avery Point Academic Building Roof

☒ Check For Positive Stop – Clearly Identify Homogenous Group **Date Sampled:** 5/7/2018

Samplers Name: Brian Quinlan **Samplers Signature:**

Sample #	HA #	Sample Location	Material Description
050701A	ND	Flat Roof Core 1	Black tar TOP
⊥ B		3	⊥
050702A		1	Black Tar middle
⊥ B		2	⊥
050703A		2	Black tar Bottom
⊥ B		⊥ 3	⊥
050704A		Flat Roof sky light	Black tar over old skylight
⊥ B	⊥	⊥	⊥

ND

only analyze one TEM per AB set if the AB set is <1% asbestos

Client Sample # (s): **Total # of Samples:**

Relinquished (Client): **Date:** 5/8/2018 **Time:**

Received (Lab): **Date:** 5-9-18 **Time:** 9:20

Comments/Special Instructions:

Bill To: Langan_InvoiceCapture@ Concur Solutions.com

44

OrderID: 041813852

EMSL ANALYTICAL, INC.
LABORATORY • PRODUCTS • TRAINING

Asbestos Bulk Building Material Chain of Custody

EMSL Order Number (Lab Use Only):

041813852

EMSL ANALYTICAL, INC.
200 Route 130 North
CINNAMINSON, NJ
PHONE: (800) 220-3675
FAX: (856) 786-5974

RECEIVED
EMSL
CINNAMINSON NJ
18 MAY -9 AM 10:24

Additional Pages of the Chain of Custody are only necessary if needed for additional sample information

Sample #	HA #	Sample Location	Material Description	
050705A	30%	Flat Roof penetration Flashing	Bottom Layer	30%
B	—			—
C	—		Top Layer	—
D	—			—
050706A	3.8%	Flat Roof Perimeter Flashing	Bottom Layer	3.8%
B	ND			
C	4%		Top Layer	4%
D	—			
050707A	ND	Pitched Roof	Black tar Bottom	ND
B				
C			Black shingle with Blue/gray stone Top	
D				
050708A	5%	Pitched Roof	Older Gray/Black Gutter Flashing Tar	5%
B	—			—
C	—		Newer Black Gutter Flashing Tar	—
D	—			—
050709A	ND	Wall	Gray Caulking on Black under shingled Roof	ND
B				
050710A		Stair Roof	Black Rubber core Top	
B			Flashing	
050711A			Adhesive on Black Rubber Top	
B			Flashing	
050712A			Gray Paper on Iso board core	
B				

For each ABCD set stop at first positive over though materials different. Only analyze one sample per AB set by TEM If <1% asbestos. Only analyze one sample per CD set by TEM If AB TEM set <1% asbestos.

Only analyze one TEM per AB set If AB set is <1% asbestos

NO TEM

***Comments/Special Instructions:**

OrderID: 041813852

EMSL ANALYTICAL, INC.
LABORATORY • PRODUCTS • TRAINING

Asbestos Bulk Building Material Chain of Custody

EMSL Order Number *(Lab Use Only)*:

041813852

EMSL ANALYTICAL, INC.
200 RT. 130 NORTH
CINNAMINSON, NJ 08077
PHONE: (800) 220-3675
FAX: (856) 786-5974

RECEIVED
EMSL
CINNAMINSON, NJ
18 MAY -9 AM 10:24

Additional Pages of the Chain of Custody are only necessary if needed for additional sample information

Only analyze one TEM per AB set
If AB set is <1% asbestos

Sample #	HA #	Sample Location	Material Description
050713A	20%	Stair Roof	Bottom Layer Core
B	—		
050714A	ND		Black Seam Caulking
B			
050715A		Duct on Roof	Upper Layer
B			
050716A			Bottom Layer
B			
050717A			Adhesive
B			
050718A			White Seam Sealant
B			

20%
—
ND

*Comments/Special Instructions:

EMSL Analytical, Inc.

200 Route 130 North Cinnaminson, NJ 08077
Phone/Fax: (800) 220-3675 / (856) 786-5974
http://www.EMSL.com / cinnasblab@EMSL.com

EMSL Order ID: 041813852
Customer ID: LANG78
Customer PO:
Project ID:

Attn: Matthew Myers
Langan Engineering & Environ. Services
Long Wharf Maritime Center
555 Long Wharf Drive
New Haven, CT 06511

Phone: (203) 562-5771
Fax: (203) 789-6142
Collected: 5/ 7/2018
Received: 5/09/2018
Analyzed: 5/11/2018

Proj: 140183002 - Uconn Avery Point - Academic Building Roof

Summary Test Report for Asbestos Analysis of Bulk Material via EPA 600/R-93/116

Client Sample ID: 050701A **Lab Sample ID:** 041813852-0001
Sample Description: Flat Roof Core 1/Core 1 - Black Tar Top

TEST	Analyzed Date	Color	Non-Asbestos Fibrous	Non-Asbestos Non-Fibrous	Asbestos	Comment
PLM	5/10/2018	Black/Yellow	35%	65%	None Detected	
TEM Grav. Reduction	5/11/2018	Black/Yellow	0.0%	100%	None Detected	

Client Sample ID: 050701B **Lab Sample ID:** 041813852-0002
Sample Description: Flat Roof Core 3/Core 3 - Black Tar Top

TEST	Analyzed Date	Color	Non-Asbestos Fibrous	Non-Asbestos Non-Fibrous	Asbestos	Comment
PLM	5/10/2018	Brown/Black	30%	70%	None Detected	

Client Sample ID: 050702A **Lab Sample ID:** 041813852-0003
Sample Description: Flat Roof Core 1/Core 1 - Black Tar Middle

TEST	Analyzed Date	Color	Non-Asbestos Fibrous	Non-Asbestos Non-Fibrous	Asbestos	Comment
PLM	5/10/2018	Black/Yellow	40%	60%	None Detected	
TEM Grav. Reduction	5/11/2018	Black/Yellow	0.0%	100%	None Detected	

Client Sample ID: 050702B **Lab Sample ID:** 041813852-0004
Sample Description: Flat Roof Core 2/Core 2 - Black Tar Middle

TEST	Analyzed Date	Color	Non-Asbestos Fibrous	Non-Asbestos Non-Fibrous	Asbestos	Comment
PLM	5/10/2018	Black	20%	80%	None Detected	

Client Sample ID: 050703A **Lab Sample ID:** 041813852-0005
Sample Description: Flat Roof Core 2/Core 2 - Black Tar Bottom

TEST	Analyzed Date	Color	Non-Asbestos Fibrous	Non-Asbestos Non-Fibrous	Asbestos	Comment
PLM	5/10/2018	Black/Yellow	25%	75%	None Detected	
TEM Grav. Reduction	5/11/2018	Black/Yellow	0.0%	100%	None Detected	

Client Sample ID: 050703B **Lab Sample ID:** 041813852-0006
Sample Description: Flat Roof Core 3/Core 3 - Black Tar Bottom

TEST	Analyzed Date	Color	Non-Asbestos Fibrous	Non-Asbestos Non-Fibrous	Asbestos	Comment
PLM	5/10/2018	Black	20%	80%	None Detected	

Client Sample ID: 050704A **Lab Sample ID:** 041813852-0007
Sample Description: Flat Roof Skylight/Black Tar over Old Skylight

TEST	Analyzed Date	Color	Non-Asbestos Fibrous	Non-Asbestos Non-Fibrous	Asbestos	Comment
PLM	5/10/2018	Black	20%	80%	None Detected	
TEM Grav. Reduction	5/11/2018	Black	0.0%	100%	None Detected	

EMSL Analytical, Inc.

200 Route 130 North Cinnaminson, NJ 08077
Phone/Fax: (800) 220-3675 / (856) 786-5974
http://www.EMSL.com / cinnasblab@EMSL.com

EMSL Order ID: 041813852
Customer ID: LANG78
Customer PO:
Project ID:

Summary Test Report for Asbestos Analysis of Bulk Material via EPA 600/R-93/116

Client Sample ID: 050704B **Lab Sample ID:** **041813852-0008**

Sample Description: Flat Roof Skylight/Black Tar over Old Skylight

TEST	Analyzed Date	Color	Non-Asbestos Fibrous	Non-Asbestos Non-Fibrous	Asbestos	Comment
PLM	5/10/2018	Black	30%	70%	None Detected	

Client Sample ID: 050705A **Lab Sample ID:** **041813852-0009**

Sample Description: Flat Roof/Penetration Flashing - Bottom Layer

TEST	Analyzed Date	Color	Non-Asbestos Fibrous	Non-Asbestos Non-Fibrous	Asbestos	Comment
PLM	5/10/2018	Black	30%	40%	**30% Chrysotile**	

Client Sample ID: 050705B **Lab Sample ID:** **041813852-0010**

Sample Description: Flat Roof/Penetration Flashing - Bottom Layer

TEST	Analyzed Date	Color	Non-Asbestos Fibrous	Non-Asbestos Non-Fibrous	Asbestos	Comment
PLM	5/10/2018				Positive Stop (Not Analyzed)	

Client Sample ID: 050705C **Lab Sample ID:** **041813852-0011**

Sample Description: Flat Roof/Penetration Flashing - Top Layer

TEST	Analyzed Date	Color	Non-Asbestos Fibrous	Non-Asbestos Non-Fibrous	Asbestos	Comment
PLM	5/10/2018				Positive Stop (Not Analyzed)	

Client Sample ID: 050705D **Lab Sample ID:** **041813852-0012**

Sample Description: Flat Roof/Penetration Flashing - Top Layer

TEST	Analyzed Date	Color	Non-Asbestos Fibrous	Non-Asbestos Non-Fibrous	Asbestos	Comment
PLM	5/10/2018				Positive Stop (Not Analyzed)	

Client Sample ID: 050706A **Lab Sample ID:** **041813852-0013**

Sample Description: Flat Roof/Perimeter Flashing - Bottom Layer

TEST	Analyzed Date	Color	Non-Asbestos Fibrous	Non-Asbestos Non-Fibrous	Asbestos	Comment
PLM	5/10/2018	Black	40%	60%	None Detected	
TEM Grav. Reduction	5/11/2018	Black	0.0%	96.2%	**3.8% Chrysotile**	

Client Sample ID: 050706B **Lab Sample ID:** **041813852-0014**

Sample Description: Flat Roof/Perimeter Flashing - Bottom Layer

TEST	Analyzed Date	Color	Non-Asbestos Fibrous	Non-Asbestos Non-Fibrous	Asbestos	Comment
PLM	5/10/2018	Brown/Black	45%	55%	None Detected	

Client Sample ID: 050706C **Lab Sample ID:** **041813852-0015**

Sample Description: Flat Roof/Perimeter Flashing - Top Layer

TEST	Analyzed Date	Color	Non-Asbestos Fibrous	Non-Asbestos Non-Fibrous	Asbestos	Comment
PLM	5/10/2018	Black	15%	81%	**4% Chrysotile**	The sample group is not homogeneous

EMSL Analytical, Inc.
200 Route 130 North Cinnaminson, NJ 08077
Phone/Fax: (800) 220-3675 / (856) 786-5974
http://www.EMSL.com / cinnasblab@EMSL.com

EMSL Order ID: 041813852
Customer ID: LANG78
Customer PO:
Project ID:

Summary Test Report for Asbestos Analysis of Bulk Material via EPA 600/R-93/116

Client Sample ID: 050706D **Lab Sample ID:** **041813852-0016**
Sample Description: Flat Roof/Perimeter Flashing - Top Layer

TEST	Analyzed Date	Color	Non-Asbestos Fibrous	Non-Fibrous	Asbestos	Comment
PLM	5/10/2018			Positive Stop (Not Analyzed)		

Client Sample ID: 050707A **Lab Sample ID:** **041813852-0017**
Sample Description: Pitched Roof/Black Tar Bottom

TEST	Analyzed Date	Color	Non-Asbestos Fibrous	Non-Fibrous	Asbestos	Comment
PLM	5/10/2018	Black	30%	70%	None Detected	
TEM Grav. Reduction	5/11/2018	Black	0.0%	100%	None Detected	

Client Sample ID: 050707B **Lab Sample ID:** **041813852-0018**
Sample Description: Pitched Roof/Black Tar Bottom

TEST	Analyzed Date	Color	Non-Asbestos Fibrous	Non-Fibrous	Asbestos	Comment
PLM	5/10/2018	Black	30%	70%	None Detected	

Client Sample ID: 050707C **Lab Sample ID:** **041813852-0019**
Sample Description: Pitched Roof/Black Shingle with Blue/Gray Stone - Top

TEST	Analyzed Date	Color	Non-Asbestos Fibrous	Non-Fibrous	Asbestos	Comment
PLM	5/10/2018	Gray/Black/Blue	20%	80%	None Detected	

Client Sample ID: 050707D **Lab Sample ID:** **041813852-0020**
Sample Description: Pitched Roof/Black Shingle with Blue/Gray Stone - Top

TEST	Analyzed Date	Color	Non-Asbestos Fibrous	Non-Fibrous	Asbestos	Comment
PLM	5/10/2018	Gray/Black/Blue	15%	85%	None Detected	

Client Sample ID: 050708A **Lab Sample ID:** **041813852-0021**
Sample Description: Pitched Roof/Older Gray/Black Gutter Flashing Tar

TEST	Analyzed Date	Color	Non-Asbestos Fibrous	Non-Fibrous	Asbestos	Comment
PLM	5/10/2018	Gray/Black	20%	75%	**5% Chrysotile**	

Client Sample ID: 050708B **Lab Sample ID:** **041813852-0022**
Sample Description: Pitched Roof/Older Gray/Black Gutter Flashing Tar

TEST	Analyzed Date	Color	Non-Asbestos Fibrous	Non-Fibrous	Asbestos	Comment
PLM	5/10/2018			Positive Stop (Not Analyzed)		

Client Sample ID: 050708C **Lab Sample ID:** **041813852-0023**
Sample Description: Pitched Roof/Newer Black Gutter Flashing Tar

TEST	Analyzed Date	Color	Non-Asbestos Fibrous	Non-Fibrous	Asbestos	Comment
PLM	5/10/2018			Positive Stop (Not Analyzed)		

EMSL Analytical, Inc.
200 Route 130 North Cinnaminson, NJ 08077
Phone/Fax: (800) 220-3675 / (856) 786-5974
http://www.EMSL.com / cinnasblab@EMSL.com

EMSL Order ID: 041813852
Customer ID: LANG78
Customer PO:
Project ID:

Summary Test Report for Asbestos Analysis of Bulk Material via EPA 600/R-93/116

Client Sample ID: 050708D ***Lab Sample ID:*** **041813852-0024**
Sample Description: Pitched Roof/Newer Black Gutter Flashing Tar

TEST	Analyzed Date	Color	Non-Asbestos Fibrous	Non-Asbestos Non-Fibrous	Asbestos	Comment
PLM	5/10/2018				Positive Stop (Not Analyzed)	

Client Sample ID: 050709A ***Lab Sample ID:*** **041813852-0025**
Sample Description: Wall/Gray Caulking on Block under Shingled Roof

TEST	Analyzed Date	Color	Non-Asbestos Fibrous	Non-Asbestos Non-Fibrous	Asbestos	Comment
PLM	5/10/2018	Gray	0%	100%	None Detected	
TEM Grav. Reduction	5/11/2018	Gray	0.0%	100%	None Detected	

Client Sample ID: 050709B ***Lab Sample ID:*** **041813852-0026**
Sample Description: Wall/Gray Caulking on Block under Shingled Roof

TEST	Analyzed Date	Color	Non-Asbestos Fibrous	Non-Asbestos Non-Fibrous	Asbestos	Comment
PLM	5/10/2018	Gray	0%	100%	None Detected	

Client Sample ID: 050710A ***Lab Sample ID:*** **041813852-0027**
Sample Description: Stair Roof/Black Rubber Core Top

TEST	Analyzed Date	Color	Non-Asbestos Fibrous	Non-Asbestos Non-Fibrous	Asbestos	Comment
PLM	5/10/2018	Black	0%	100%	None Detected	
TEM Grav. Reduction	5/11/2018	Black	0.0%	100%	None Detected	

Client Sample ID: 050710B ***Lab Sample ID:*** **041813852-0028**
Sample Description: Stair Roof/Black Rubber Flashing

TEST	Analyzed Date	Color	Non-Asbestos Fibrous	Non-Asbestos Non-Fibrous	Asbestos	Comment
PLM	5/10/2018	Black	0%	100%	None Detected	

Client Sample ID: 050711A ***Lab Sample ID:*** **041813852-0029**
Sample Description: Stair Roof/Adhesive on Black Rubber Top

TEST	Analyzed Date	Color	Non-Asbestos Fibrous	Non-Asbestos Non-Fibrous	Asbestos	Comment
PLM	5/10/2018	Clear	10%	90%	None Detected	
TEM Grav. Reduction	5/11/2018	Clear	0.0%	100%	None Detected	

Client Sample ID: 050711B ***Lab Sample ID:*** **041813852-0030**
Sample Description: Stair Roof/Adhesive on Black Rubber Flashing

TEST	Analyzed Date	Color	Non-Asbestos Fibrous	Non-Asbestos Non-Fibrous	Asbestos	Comment
PLM	5/10/2018	Black	0%	100%	None Detected	

Client Sample ID: 050712A ***Lab Sample ID:*** **041813852-0031**
Sample Description: Stair Roof/Gray Paper on ISO Board Core

TEST	Analyzed Date	Color	Non-Asbestos Fibrous	Non-Asbestos Non-Fibrous	Asbestos	Comment
PLM	5/10/2018	Brown/Gray	90%	10%	None Detected	

EMSL Analytical, Inc.

200 Route 130 North Cinnaminson, NJ 08077
Phone/Fax: (800) 220-3675 / (856) 786-5974
http://www.EMSL.com / cinnasblab@EMSL.com

EMSL Order ID: 041813852
Customer ID: LANG78
Customer PO:
Project ID:

Summary Test Report for Asbestos Analysis of Bulk Material via EPA 600/R-93/116

Client Sample ID: 050712B **Lab Sample ID:** **041813852-0032**

Sample Description: Stair Roof/Gray Paper on ISO Board Core

TEST	Analyzed Date	Color	Non-Asbestos Fibrous	Non-Asbestos Non-Fibrous	Asbestos	Comment
PLM	5/10/2018	Gray	75%	25%	None Detected	

Client Sample ID: 050713A **Lab Sample ID:** **041813852-0033**

Sample Description: Stair Roof/Bottom Layer Core

TEST	Analyzed Date	Color	Non-Asbestos Fibrous	Non-Asbestos Non-Fibrous	Asbestos	Comment
PLM	5/10/2018	Black	20%	60%	**20% Chrysotile**	

Client Sample ID: 050713B **Lab Sample ID:** **041813852-0034**

Sample Description: Stair Roof/Bottom Layer Core

TEST	Analyzed Date	Color	Non-Asbestos Fibrous	Non-Asbestos Non-Fibrous	Asbestos	Comment
PLM	5/10/2018				Positive Stop (Not Analyzed)	

Client Sample ID: 050714A **Lab Sample ID:** **041813852-0035**

Sample Description: Stair Roof/Black Seam Caulking

TEST	Analyzed Date	Color	Non-Asbestos Fibrous	Non-Asbestos Non-Fibrous	Asbestos	Comment
PLM	5/10/2018	Black	0%	100%	None Detected	
TEM Grav. Reduction	5/11/2018	Black	0.0%	100%	None Detected	

Client Sample ID: 050714B **Lab Sample ID:** **041813852-0036**

Sample Description: Stair Roof/Black Seam Caulking

TEST	Analyzed Date	Color	Non-Asbestos Fibrous	Non-Asbestos Non-Fibrous	Asbestos	Comment
PLM	5/10/2018	Black	0%	100%	None Detected	

Client Sample ID: 050715A **Lab Sample ID:** **041813852-0037**

Sample Description: Duct on Roof/Upper Layer

TEST	Analyzed Date	Color	Non-Asbestos Fibrous	Non-Asbestos Non-Fibrous	Asbestos	Comment
PLM	5/10/2018	White	0%	100%	None Detected	
TEM Grav. Reduction	5/11/2018	White	0.0%	100%	None Detected	

Client Sample ID: 050715B **Lab Sample ID:** **041813852-0038**

Sample Description: Duct on Roof/Upper Layer

TEST	Analyzed Date	Color	Non-Asbestos Fibrous	Non-Asbestos Non-Fibrous	Asbestos	Comment
PLM	5/10/2018	White	0%	100%	None Detected	

Client Sample ID: 050716A **Lab Sample ID:** **041813852-0039**

Sample Description: Duct on Roof/Bottom Layer

TEST	Analyzed Date	Color	Non-Asbestos Fibrous	Non-Asbestos Non-Fibrous	Asbestos	Comment
PLM	5/10/2018	Black	0%	100%	None Detected	
TEM Grav. Reduction	5/11/2018	Black	0.0%	100%	None Detected	

EMSL Analytical, Inc.
200 Route 130 North Cinnaminson, NJ 08077
Phone/Fax: (800) 220-3675 / (856) 786-5974
http://www.EMSL.com / cinnasblab@EMSL.com

EMSL Order ID: 041813852
Customer ID: LANG78
Customer PO:
Project ID:

Summary Test Report for Asbestos Analysis of Bulk Material via EPA 600/R-93/116

Client Sample ID: 050716B ***Lab Sample ID:*** **041813852-0040**
Sample Description: Duct on Roof/Bottom Layer

TEST	Analyzed Date	Color	Non-Asbestos Fibrous	Non-Asbestos Non-Fibrous	Asbestos	Comment
PLM	5/10/2018	Black	20%	80%	None Detected	

Client Sample ID: 050717A ***Lab Sample ID:*** **041813852-0041**
Sample Description: Duct on Roof/Adhesive

TEST	Analyzed Date	Color	Non-Asbestos Fibrous	Non-Asbestos Non-Fibrous	Asbestos	Comment
PLM	5/10/2018	Clear	10%	90%	None Detected	
TEM Grav. Reduction	5/11/2018	Silver/Clear	0.0%	100%	None Detected	

Client Sample ID: 050717B ***Lab Sample ID:*** **041813852-0042**
Sample Description: Duct on Roof/Adhesive

TEST	Analyzed Date	Color	Non-Asbestos Fibrous	Non-Asbestos Non-Fibrous	Asbestos	Comment
PLM	5/10/2018	Clear	0%	100%	None Detected	

Client Sample ID: 050718A ***Lab Sample ID:*** **041813852-0043**
Sample Description: Duct on Roof/White Seam Sealant

TEST	Analyzed Date	Color	Non-Asbestos Fibrous	Non-Asbestos Non-Fibrous	Asbestos	Comment
PLM	5/10/2018	White	0%	100%	None Detected	
TEM Grav. Reduction	5/11/2018	White	0.0%	100%	None Detected	

Client Sample ID: 050718B ***Lab Sample ID:*** **041813852-0044**
Sample Description: Duct on Roof/White Seam Sealant

TEST	Analyzed Date	Color	Non-Asbestos Fibrous	Non-Asbestos Non-Fibrous	Asbestos	Comment
PLM	5/10/2018	White	0%	100%	None Detected	

EMSL Analytical, Inc.
200 Route 130 North Cinnaminson, NJ 08077
Phone/Fax: (800) 220-3675 / (856) 786-5974
http://www.EMSL.com / cinnasblab@EMSL.com

EMSL Order ID:	041813852
Customer ID:	LANG78
Customer PO:	
Project ID:	

Summary Test Report for Asbestos Analysis of Bulk Material via EPA 600/R-93/116

Analyst(s):

Christina Maiorana	PLM (20)
Daniel Fricker	PLM (16)
Sandy Burany, Ph.D	TEM Grav. Reduction (14)

Reviewed and approved by:

Benjamin Ellis, Laboratory Manager
or Other Approved Signatory

EMSL maintains liability limited to cost of analysis. This report relates only to the samples reported above and may not be reproduced, except in full, without written approval by EMSL. This test report must not be used to claim product endorsement by NVLAP or any agency of the U.S. Government. EMSL bears no responsibility for sample collection activities or analytical method limitations. The laboratory is not responsible for the accuracy of results when requested to physically separate and analyze layered samples. PLM alone is not consistently reliable in detecting asbestos in floor coverings and similar NOBs

Samples analyzed by EMSL Analytical, Inc. Cinnaminson, NJ NVLAP Lab Code 101048-0, AIHA-LAP, LLC-IHLAP Lab 100194, NYS ELAP 10872, NJ DEP 03036

Initial report from: 05/10/201813:48:25

Appendix B

Roof Diagram

LEGEND

AREA OF INSPECTION

LANGAN

555 Long Wharf Drive, New Haven, CT 06511

T: 203.562.5771 F: 203.789.6142 www.langan.com

Langan Engineering, Environmental, Surveying and Landscape Architecture, D.P.C. S.A.
Langan Engineering, Environmental, Surveying and Landscape Architecture, D.P.C.
Langan Engineering and Environmental Services, Inc.
Langan CT, Inc.
Langan International LLC
Collectively known as Langan

Project

AVERY POINT ACADEMIC BUILDING

1084 SHENNECOSSETT ROAD

GROTON CONNECTICUT

Drawing Title

ROOF DIAGRAM

Project No. 140183002	Appendix C
Date 05/10/2018	
Scale NTS	
Drawn By BDQ / Checked By MM	
Submission Date 05/2018	

Appendix C

Langan Certifications and Accreditations

Appendix C

Langan Certifications and Accreditations

WALLET CARD

STATE OF CONNECTICUT

DEPARTMENT OF PUBLIC HEALTH

NAME

MATTHEW A. MYERS

VALIDATION NO.	CERTIFICATE NO.	CURRENT THROUGH
03-589873	000058	04/30/18

PROFESSION

ASBESTOS CONSULTANT-PROJECT DESIGNER

SIGNATURE

COMMISSIONER

WALLET CARD

STATE OF CONNECTICUT

DEPARTMENT OF PUBLIC HEALTH

NAME

MATTHEW A. MYERS

VALIDATION NO.	CERTIFICATE NO.	CURRENT THROUGH
03-589874	000041	04/30/18

PROFESSION

ASBESTOS CONSULTANT-INSP/MGMT PLANNER

SIGNATURE

COMMISSIONER

WALLET CARD

STATE OF CONNECTICUT

DEPARTMENT OF PUBLIC HEALTH

NAME

MATTHEW A. MYERS

VALIDATION NO.	CERTIFICATE NO.	CURRENT THROUGH
03-589871	000191	04/30/18

PROFESSION

LEAD INSPECTOR RISK ASSESSOR

SIGNATURE

COMMISSIONER

WALLET CARD

STATE OF CONNECTICUT

DEPARTMENT OF PUBLIC HEALTH

NAME

MATTHEW A. MYERS

VALIDATION NO.	CERTIFICATE NO.	CURRENT THROUGH
03-589872	000077	04/30/18

PROFESSION

ASBESTOS CONSULTANT-PROJECT MONITOR

SIGNATURE

COMMISSIONER

ATC GROUP SERVICES LLC

104 East 25th Street, New York, NY 10010
(212) 353-8280

certifies that

Matthew Myers

XX-XX-XXXX
(Social Security Number)

Has Successfully Completed the Accredited 4 Hour EPA-AHERA/ASHARA under 40 CFR 763 and the New York State Department of Health Approved Course for

Asbestos Inspector Refresher

on

August 30, 2017

**** Please note that the official record of successful completion is the DOH 2832 Certificate of Asbestos Safety Training.****

This course meets the requirements of TSCA Title II

Certificate#: NYS –RHIIIR-21407 **Exam date: 08-30-17** **Expiration Date: 08-30-18**

Course Location 21 West 38th Street, NYC

Signed: _____
Steve Winograd, Director of Training

© 2016 Great Papers

CERT#: L-600-906

CHEMSCOPE TRAINING DIVISION

LEAD INSPECTOR/RISK ASSESSOR REFRESHER

8HOUR TRAINING CERTIFICATE

Matthew Myers

555 Long Wharf Drive, New Haven CT

Has attended an 8hour course on the subject discipline on

9/8/2017 and has passed a written examination.

The above individual has successfully completed the above training course approved in accordance with the Department of Public Health Standards established pursuant to Section 20-477 of the Connecticut General Statutes.

Course topics include all required topics of State of Connecticut DPH and EPA.

Under civil and criminal penalties of law for the making or submission of false or fraudulent statements or representations (U.S.C. 1001 and 15 U.S. C. 2615), I certify that this training complies with all applicable requirements of Title IV of TSCA, 40 CFR part 745 and any other applicable Federal, State or local requirements.

Examination Score: 92%
Exam Date: 9/8/2017
Expiration Date: 9/8/2018

Ronald D. Arena
Training Manager

Chem Scope, Inc.
15 Moulthrop Street
North Haven CT 06473
Phone: 203.865.5605
www.chem-scope.com

© GOES 340

Litho in U.S.A.

STATE OF CONNECTICUT

DEPARTMENT OF PUBLIC HEALTH

PURSUANT TO THE PROVISIONS OF THE GENERAL STATUTES OF CONNECTICUT

THE INDIVIDUAL NAMED BELOW IS CERTIFIED
BY THIS DEPARTMENT AS A

ASBESTOS CONSULTANT-PROJECT MONITOR

BRIAN D QUINLAN

CERTIFICATE NO.
000783

CURRENT THROUGH
07/31/18

VALIDATION NO.
03-604205

SIGNATURE

COMMISSIONER

STATE OF CONNECTICUT

DEPARTMENT OF PUBLIC HEALTH

PURSUANT TO THE PROVISIONS OF THE GENERAL STATUTES OF CONNECTICUT

THE INDIVIDUAL NAMED BELOW IS CERTIFIED
BY THIS DEPARTMENT AS A

ASBESTOS CONSULTANT-INSPECTOR

BRIAN D QUINLAN

CERTIFICATE NO.
000921

CURRENT THROUGH
07/31/18

VALIDATION NO.
03-604206

SIGNATURE

COMMISSIONER

STATE OF CONNECTICUT

DEPARTMENT OF PUBLIC HEALTH

PURSUANT TO THE PROVISIONS OF THE GENERAL STATUTES OF CONNECTICUT

THE INDIVIDUAL NAMED BELOW IS CERTIFIED
BY THIS DEPARTMENT AS A

LEAD INSPECTOR

BRIAN D QUINLAN

CERTIFICATE NO.
002240

CURRENT THROUGH
07/31/18

VALIDATION NO.
03-627381

SIGNATURE

COMMISSIONER

ATC GROUP SERVICES LLC

104 East 25th Street, New York, NY 10010
(212) 353-8280

Certifies that

Brian D. Quinlan

XX-XX-XXXX
(Social Security Number)

Has Successfully Completed the Accredited 4 Hour EPA-AHERA/ASHARA under 40 CFR 763 and the New York State Department of Health Approved Course for

Asbestos Inspector Refresher

On

February 21, 2018

**** Please note that the official record of successful completion is the DOH 2832 Certificate of Asbestos Safety Training. ****

This course meets the requirements of TSCA Title II

Certificate#: NYS –RHIIIR-21640 **Exam date: 02-21-18** **Expiration Date: 02-21-19**

Course Location: 21 West 38th Street, NYC

Signed: _____
Fitzroy N. Scott, Director of Training

Plan Review

State of Connecticut
University of Connecticut - Avery Point
1084 Shennecossett Road
Groton, CT 06340-6097
USA
Attn: Charles Brome charles.brome@uconn.edu

Index-Rec No: 017072.54-01
Account No: 01-30882
Date of Review: November 08, 2018
Review No: 281509

Plans Submitted By: Charles Brome, State of Connecticut

Subject: Written Response to Review 278423 for Academic Building Roof Project No. 300098

Executive Summary:

This project consists of re-roofing the Academic building, approximately 11,000 sq. ft. Work will include, removing the existing multi-ply built up roofs and provide PVC membrane roof system with associated insulation layers and cover board layers. Raise existing mechanical equipment, remove existing windows, infill openings in the masonry walls, replace windows in the stair to the penthouse, and provide metal cladding wall system on the exterior walls above the roof. In addition, plans are to abate hazardous materials and replace the bottom 3 ft. of the asphalt shingle roofs, gutters and down leaders.

This letter is in response to previous Plan Review Letter No. 0278423.

This letter requires additional information to determine accordance with FM Global Standards. FM Global awaits the submittal of the Form 2688, as well as a final review pending uplift test results. Please see open Plan Review comments for more information.

Open	3-8
Closed	1, 2

Scope of Review:

This confirms the receipt and review of:

- Memorandum in response to previous Plan Review letter dated October 31, 2018 by Cedric R. White

Review Comments:

1. The wind design criteria for this location, per FM Global Property Loss Prevention Data Sheet 1-28, *Wind Design*, should be based on a wind speed of 120 mph, a Ground Roughness of D, a building importance factor of 1.15 and the building is considered partially enclosed. The flat roof has a roof area of 60 x 155 ft. a building height of 30 ft. and requires a Class 1-135, 1-210 and 1-300 uplift rating in the field,

This report has been developed for insurance underwriting purposes. It is provided to you for informational purposes only to reduce the possibility of loss to insured property by bringing to your attention certain potential hazards or conditions. Life, safety, or health issues are not addressed. You must make the decision whether to take any action. The company undertakes no duty to you or any other party by providing this report or the activities on which it is based. The liability of the company is limited to that contained in its insurance policies.

perimeter and corners respectively. The sloped roof has a roof area of 40 x 60 ft. a building mean height of 40 ft., and requires a Class 1-150, 1-210, and 1-300 uplift rating in the field, perimeter and corners respectively as outlined in Data Sheet 1-28. Please confirm the deck and above deck roof components will meet these ratings.

As an alternative for selecting three different FM Approved RoofNav assemblies with the appropriate wind uplift ratings for each roof section (field, perimeter, and corners), an FM Approved RoofNav assembly can be selected with a minimum wind uplift rating of 1-300 and applied in all areas.

Response from Cedric R. White (October 31, 2018): Using RoofNav Rating calculator, and assuming fully enclosed wind speed of 120 mph, and no risk of windborne debris, we calculated required uplift ratings of Class 1-105, 1-180, and 1-270. We propose to use a roof system that meets Class 1-285 (Assembly No. 354333-0-0).

FM Global Status Update (November 7, 2018): This can be considered tolerable for this project only. Please understand this may not be acceptable for any future projects. Please provide Form 2688 for review and comment when it becomes available. This comment is considered closed.

2. The perimeter and corners should be defined per Data Sheet 1-28 as follows:

Roof Area	Perimeter	Corner
Main Flat Roof	6 ft.	6 x 6 ft.
Sloped Asphalt Shingle Roof	4 ft.	4 x 4 ft.

Response from Cedric R. White (October 31, 2018): This information is noted in the 95% Construction Documents Specification Section 075000-1-.08-F.

FM Global Status Update (November 7, 2018): This comment is considered closed.

3. Please fill out and submit a FM Global Form 2688, *Checklist for Roofing System*, for each roof area to this office for review and comment when they become available. The Form 2688 should include the RoofNav Assembly number for the newly specified assemblies and contain all the materials utilized in the roofing project. Exact trade names of the materials being utilized should be stated along with the proposed fastening rates and insulation thicknesses. These forms should be sent to this office by the contractor of record before the roof installation begins and before material is purchased.

FM Global would appreciate if a Roofing Contractor Package was submitted to this office along with the Form 2688 for FM Global to easily identify what roofing materials are being utilized in this roofing project.

Response from Cedric R. White (October 31, 2018): This is required in 95% Construction Documents Specification Section 075000-1-.05-A-9**.**

FM Global Status Update (November 7, 2018): FM Global looks forward to reviewing the Form 2688 for RoofNav Assembly No. 354333-0-0 when it becomes available.

This report has been developed for insurance underwriting purposes. It is provided to you for informational purposes only to reduce the possibility of loss to insured property by bringing to your attention certain potential hazards or conditions. Life, safety, or health issues are not addressed. You must make the decision whether to take any action. The company undertakes no duty to you or any other party by providing this report or the activities on which it is based. The liability of the company is limited to that contained in its insurance policies.

4. Install FM Approved perimeter flashing with the appropriate wind uplift rating for all roof areas and submit technical data sheets for the product to show compliance. Install the wooden nailer per Data Sheet 1-49, *Perimeter Flashing*. The type of fasteners used, fastening rates, and drawings should be provided to FM Global for review. The current drawing shows the use of nails into CMU block to secure the continuous metal hook strip, which is not acceptable.

   Response from Cedric R. White (October 31, 2018): Attached is the ANSI/SPRI ES-1 tested roof edge metal detail that has a tested wind load resistance of 390 psf. Fastener types and spacing match this detail and are shown in drawing Detail 5/AE3.0. The letter also states that the current details that show the use of roofing nails into CMU block for the continuous hook strip are not acceptable. We will revise the Drawings to show the roofing nailed into the wood blocking instead.

   FM Global Status Update (November 7, 2018): It remains FM Global's best advice to use FM Approved perimeter flashing where available.

5. Secure roof-mounted equipment to the roof structure. All existing and any new roof-mounted equipment should be secured to withstand wind speed of 120 mph in accordance with Data Sheet 1-28 section 3.8. This should include ensuring all equipment is secured to the roof structure, all screws are in place and all panels of such equipment and fixtures are secured. Equipment set on wood sleepers is obviously not adequately secured.

   Response from Cedric R. White (October 31, 2018): We will revise the Drawings to show roof-mounted equipment fastened to the roof structure. Note that the scope is to reuse the existing mechanical equipment. We will update the specification to require providing new screws for the mechanical equipment panels if they are missing, but we have no designed or checked the equipment panels.

   FM Global Status Update (November 7, 2018): Please provide design specifications outlining the equipment was previously designed to withstand wind loads in accordance with Data Sheet 1-28 Section 3.8.

6. An adhered membrane roof assembly has been specified. As such, the final acceptance of the roof covering installation should be conditional to successful uplift testing in accordance with Data Sheet 1-52, *Field Verification of Roof Wind Uplift Resistance*. This requirement should be included in the contract to ensure testing is witnessed by the owner's representative.

   Response from Cedric R. White (October 31, 2018): Uplift testing is included in the design contract, and a third-party will perform it per the data sheet.

   FM Global Status Update (November 7, 2018): FM Global will await to review uplift test results upon roof completion.

7. **(NEW)** New roof shingles should be Miami-Dade Approved for windspeeds of 120 mph. An ice and water shield should below the new shingled area.

8. **(NEW)** The proposed RoofNav Assembly No. 354333-0-0 is for a "New Roof". Per RoofNav specifications the structural concrete must have a minimum compressive strength of 2,500 psi, and a minimum thickness of 2 in. Please confirm the existing deck meets these requirements.

This report has been developed for insurance underwriting purposes. It is provided to you for informational purposes only to reduce the possibility of loss to insured property by bringing to your attention certain potential hazards or conditions. Life, safety, or health issues are not addressed. You must make the decision whether to take any action. The company undertakes no duty to you or any other party by providing this report or the activities on which it is based. The liability of the company is limited to that contained in its insurance policies.

Recommendations to Reduce Hazards during Installation:

- Hot work of any kind should be avoided. If there is a practical and safer way to do the job without hot work, the alternative method should be used. If hot work is unavoidable, precautions such as those outlined on the FM Global Hot Work Permit System should be taken during any such work.

- Install only as much roof insulation that can be covered with roof covering in a single working day, or prior to the expected start of inclement weather. Seal loose roof cover edges at the end of each day to minimize potential moisture damage.

- Do not allow smoking on the roofs at any time. Smoking should be permitted only in safe designated areas provided with adequate disposal containers. Posted smoking policy signs should be provided throughout the area.

- Thorough supervision by the building owner's qualified representative should be provided during construction/installation to ensure adherence to specifications and quality of workmanship.

Please respond to the above plan review comments at your earliest convenience. If there are any questions or concerns regarding this review, you can contact the Boston Operations Lead Engineer via e-mail at bostonleadengineer@fmglobal.com.

This review is for property insurance purposes only in accordance with FM Global standards and guidelines. Nothing should be inferred from this review regarding compliance with any rules, regulations or requirements of government agencies, state or local codes or any other jurisdictional authority. We are retaining the copy of your submitted plans for our files.

Sincerely,

Kosta Fabrikarakis
Consultant Engineer

Loss Prevention Resources:

FM Global Property Loss Prevention Data Sheets (http://www.fmglobaldatasheets.com)
FM Global Loss Prevention Training (https://fmglobaltraining.skillport.com)
Approval Guide (http://www.approvalguide.com)
RoofNav (http://roofnav.fmglobal.com)

Distribution:

Alfred Tanguay, People's United Insurance Agency, Inc., fred.tanguay@peoples.com
Ben Roccapriore, University of Connecticut, john.roccapriore@uconn.edu
Daria Cirish, State of Connecticut, daria.cirish@ct.gov
Sherry Petruccione, Department of Administrative Services, sherry.petruccione@ct.gov
Cedric White, SGH CRWhite@sgh.com
Annemarie Der Ananian, SGH ARDerananian@sgh.com
Ameya Sampat, FM Global Account Engineer, ameya.sampat@fmglobal.com

This report has been developed for insurance underwriting purposes. It is provided to you for informational purposes only to reduce the possibility of loss to insured property by bringing to your attention certain potential hazards or conditions. Life, safety, or health issues are not addressed. You must make the decision whether to take any action. The company undertakes no duty to you or any other party by providing this report or the activities on which it is based. The liability of the company is limited to that contained in its insurance policies.

William Santos, FM Global Senior Account Engineer, william.santos@fmglobal.com

Attachments:

Form 2688

This report has been developed for insurance underwriting purposes. It is provided to you for informational purposes only to reduce the possibility of loss to insured property by bringing to your attention certain potential hazards or conditions. Life, safety, or health issues are not addressed. You must make the decision whether to take any action. The company undertakes no duty to you or any other party by providing this report or the activities on which it is based. The liability of the company is limited to that contained in its insurance policies.

Plan Review

State of Connecticut
University of Connecticut - Avery Point
1084 Shennecossett Road
Groton, CT 06340-6097
USA
Attn: Charles Brome charles.brome@uconn.edu

Index-Rec No: 017072.54-01
Account No: 01-30882
Date of Review: September 27, 2018
Review No: 0278423

Plans Submitted By: Charles Brome, State of Connecticut

Subject: 95% CD Plans and Specs for Academic Building-Project No. 300098

Executive Summary:

Thank you for this submittal to FM Global Boston Operations Plan Review office regarding the re-roofing project on the Academic building roof, approximately 11,000 sq. ft. The project consists of removing the existing multi-ply built up roofs and provide PVC membrane roof system with associated insulation layers and cover board layers. Raise existing mechanical equipment, remove existing windows, infill openings in the masonry walls, replace windows in the stair to the penthouse, and provide metal cladding wall system on the exterior walls above the roof. In addition, plans are to abate hazardous materials and replace the bottom 3 ft. of the asphalt shingle roofs, gutters and down leaders.

This submittal is in not accordance with FM Global standards. This submittal requires additional information to determine if the proposal is in accordance with FM Global standards. For a full review FM Global Form 2688 and the associated contractor's packages for each of the roof areas will need to be formally submitted.

Scope of Review:

This confirms the receipt and review of:

- Project Manual dated September 12, 2018
- 95% Construction Documents Drawing Package dated September 12, 2018

Construction drawings show the new roof assembly to be as follows:
Cover: Sika Sarnafil 60 mil PVC membrane with plasticizers secured at the laps with hot air welded seams
Securement of cover to coverboard: Fully adhered with Sarnacol 2170 VC Adhesive.
Coverboard: ½ in. thick fiberglass-mat-faced coverboard
Securement of coverboard to existing roof deck: Olybond 500 or Sarnacol OM adhesive and Sika Sarnafil Sarnaplate Insulation fasteners and plates.
Insulation: Polyisocyanurate insulation with 4½ in. minimum thickness, sloped ¼ in. per foot to roof drains
Vapor Retarder: 32 mil, self-adhesive vapor retarder composed of SBS-modified bitumen and polyethylene woven composite facer such as Sarnavap Self Adhered or approved equal.

This report has been developed for insurance underwriting purposes. It is provided to you for informational purposes only to reduce the possibility of loss to insured property by bringing to your attention certain potential hazards or conditions. Life, safety, or health issues are not addressed. You must make the decision whether to take any action. The company undertakes no duty to you or any other party by providing this report or the activities on which it is based. The liability of the company is limited to that contained in its insurance policies.

Securement of Vapor Retarder to existing roof deck: Fully adhered
Existing roof deck: Structural Concrete
Flashing Membrane: Glass-fiber-reinforced PVC, asphalt-resistant membrane, Sarnafil G459.
PVC-Clad Metal Flashing: PVC-coated heat-weldable sheet metal, Sarnaclad, 24 ga, stainless steel metal with 20 mil Sika Sarnafil membrane laminated on one side.

The roof system is to have a fire rating in accordance with FM Global Class 1. The roof assembly design is to be able to resist wind loads equal to the following ultimate loads:

Roof Area	Wind Uplift Ultimate Pressure	FM Global Roof Assembly Rating
Zone 1 (Field of Roof)	78 psf	1-100
Zone 2 (6 ft. wide perimeter of roof areas)	131 psf	1-165
Zone 3 (6 ft. x 6 ft. corner of roof areas)	197 psf	1-240

The roof is to be approved by FM Approvals for minimum wind uplift construction of 2 times the design pressure.

Flashing detail shows an existing CMU exterior wall with wood nailers. Securement of wood nailers are shown secured to the concrete deck with countersunk concrete lag bolts at 6 in. on center. A continuous metal hook strip will be secured to the existing CMU wall with 1¼ in. long roof nails at 6 in. on center. The vertical face height of the fascia is shown to be 8 in. max. in height with a 1 in. stop height (maximum of 9 in. total vertical face).

Flashing is specified to be installed in accordance with FM Global Property Loss Prevention Data Sheet 1-49, *Perimeter Flashing*.

Shingle roofs to be asphalt shingles that match the existing roof shingles. Roofing felt is existing on wood deck, except where self-adhered underlayment is noted at eaves, ridge, and hips. Shingles are to be mineral-surfaced self-seating asphalt fiberglass laminated (architectural) strip shingles. Shingles are to be attached to the plywood roof deck with 11 or 12 ga sharp pointed conventional roofing nails with barbed shanks, minimum 3/8 in. flat head and 1¼ in. shank. The felt underlayment is to be No. 30, unperforated, asphalt-saturated organic felt. The self-adhering membrane underlayment is to be 0.040 in. thick, self-adhering rubberized asphalt adhesive with polyethylene laminate integrally bonded on one side.

All roof structure is designed for ultimate design wind speed of 145 mph, an wind importance factor of 1.15, a wind exposure D. These parameters yield a wind velocity pressure of 61 psf.

Review Comments:

1. The wind design criteria for this location, per Data Sheet 1-28, *Wind Design*, should be based on a wind speed of 120 mph, a Ground Roughness of D, a building importance factor of 1.15 and the building is considered partially enclosed. The flat roof has a roof area of 60 x 155 ft. a building height of 30 ft. and

This report has been developed for insurance underwriting purposes. It is provided to you for informational purposes only to reduce the possibility of loss to insured property by bringing to your attention certain potential hazards or conditions. Life, safety, or health issues are not addressed. You must make the decision whether to take any action. The company undertakes no duty to you or any other party by providing this report or the activities on which it is based. The liability of the company is limited to that contained in its insurance policies.

requires a Class 1-135, 1-210 and 1-300 uplift rating in the field, perimeter and corners respectively. The sloped roof has a roof area of 40 ft. x 60 ft. a building mean height of 40 ft., and requires a Class 1-150, 1-210, and 1-300 uplift rating in the field, perimeter and corners respectively as outlined in Data Sheet 1-28. Please confirm the deck and above deck roof components will meet these ratings.

As an alternative for selecting three different FM Approved RoofNav assemblies with the appropriate wind uplift ratings for each roof section (field, perimeter, and corners), an FM Approved RoofNav assembly can be selected with a minimum wind uplift rating of 1-300 and applied in all areas.

2. The perimeter and corners should be defined per Data Sheet 1-28 as follows:

Roof Area	Perimeter	Corner
Main Flat Roof	6 ft.	6 x 6 ft.
Sloped Asphalt Shingle Roof	4 ft.	4 x 4 ft.

3. Please fill out and submit a FM Global Form 2688, *Checklist for Roofing System*, for each roof area to this office for review and comment when they become available. The Form 2688 should include the RoofNav Assembly number for the newly specified assemblies and contain all the materials utilized in the roofing project. Exact trade names of the materials being utilized should be stated along with the proposed fastening rates and insulation thicknesses. These forms should be sent to this office by the contractor of record before the roof installation begins and before material is purchased.

   FM Global would appreciate if a Roofing Contractor Package was submitted to this office along with the Form 2688 for FM Global to easily identify what roofing materials are being utilized in this roofing project.

4. Install FM Approved perimeter flashing with the appropriate wind uplift rating for all roof areas and submit technical data sheets for the product to show compliance. Install the wooden nailer per Data Sheet 1-49, *Perimeter Flashing*. The type of fasteners used, fastening rates, and drawings should be provided to FM Global for review. The current drawing shows the use of nails into CMU block to secure the continuous metal hook strip, which is not acceptable.

5. Secure roof-mounted equipment to the roof structure. All existing and any new roof-mounted equipment should be secured to withstand wind speed of 120 mph in accordance with Data Sheet 1-28 section 3.8. This should include ensuring all equipment is secured to the roof structure, all screws are in place and all panels of such equipment and fixtures are secured. Equipment set on wood sleepers is obviously not adequately secured.

6. An adhered membrane roof assembly has been specified. As such, the final acceptance of the roof covering installation should be conditional to successful uplift testing in accordance with Data Sheet 1-52, *Field Verification of Roof Wind Uplift Resistance*. This requirement should be included in the contract to ensure testing is witnessed by the owner's representative.

Recommendations to Reduce Hazards during Installation:

- Hot work of any kind should be avoided. If there is a practical and safer way to do the job without

This report has been developed for insurance underwriting purposes. It is provided to you for informational purposes only to reduce the possibility of loss to insured property by bringing to your attention certain potential hazards or conditions. Life, safety, or health issues are not addressed. You must make the decision whether to take any action. The company undertakes no duty to you or any other party by providing this report or the activities on which it is based. The liability of the company is limited to that contained in its insurance policies.

hot work, the alternative method should be used. If hot work is unavoidable, precautions such as those outlined on the FM Global Hot Work Permit System should be taken during any such work.

- Install only as much roof insulation that can be covered with roof covering in a single working day, or prior to the expected start of inclement weather. Seal loose roof cover edges at the end of each day to minimize potential moisture damage.

- Do not allow smoking on the roofs at any time. Smoking should be permitted only in safe designated areas provided with adequate disposal containers. Posted smoking policy signs should be provided throughout the area.

- Thorough supervision by the building owner's qualified representative should be provided during construction/installation to ensure adherence to specifications and quality of workmanship.

Please respond to the above plan review comments at your earliest convenience. If there are any questions or concerns regarding this review, you can contact the Boston Operations Lead Engineer via e-mail at bostonleadengineer@fmglobal.com.

This review is for property insurance purposes only in accordance with FM Global standards and guidelines. Nothing should be inferred from this review regarding compliance with any rules, regulations or requirements of government agencies, state or local codes or any other jurisdictional authority. We are retaining the copy of your submitted plans for our files.

Sincerely,

Jennifer Boyle
Senior Consultant Engineer

Loss Prevention Resources:

FM Global Property Loss Prevention Data Sheets (http://www.fmglobaldatasheets.com)
FM Global Loss Prevention Training (https://fmglobaltraining.skillport.com)
Approval Guide (http://www.approvalguide.com)
RoofNav (http://roofnav.fmglobal.com)

Distribution:

Alfred Tanguay, People's United Insurance Agency, Inc., fred.tanguay@peoples.com
Ben Roccapriore, University of Connecticut, john.roccapriore@uconn.edu
Daria Cirish, State of Connecticut, daria.cirish@ct.gov
Ameya Sampat, FM Global Account Engineer, ameya.sampat@fmglobal.com
William Santos, FM Global Senior Account Engineer, william.santos@fmglobal.com

This report has been developed for insurance underwriting purposes. It is provided to you for informational purposes only to reduce the possibility of loss to insured property by bringing to your attention certain potential hazards or conditions. Life, safety, or health issues are not addressed. You must make the decision whether to take any action. The company undertakes no duty to you or any other party by providing this report or the activities on which it is based. The liability of the company is limited to that contained in its insurance policies.

CHECKLIST FOR ROOFING SYSTEM

CONTACT INFORMATION: **INDEX NUMBER:**

ROOFING CONTRACTOR (NAME & ADDRESS)	TELEPHONE NO.:	**FAX:**
	E-MAIL ADDRESS:	**CONTACT:**
CLIENT (NAME & ADDRESS)	TELEPHONE NO.:	**FAX:**
	E-MAIL ADDRESS:	**CONTACT:**

OVERVIEW OF WORK: *(Submit 1 form per roof area)*

Building Name & Number:		
Building Dimensions: Length: *ft/m;*	Width: *ft/m.;*	Height *ft/m.*
Roof Slope:		
Parapet Height ,max *(in./m)*:	Parapet Height ,min *(in /m):*	
Type of Work: ☐ New Construction ☐ Recover (New roof over existing Roofing System) ☐ Reroof (New cover/remove existing roofing system to deck) ☐ Other		
FM Approved RoofNav Assembly Numbers:		

ROOF SURFACING:

☐ None	
☐ Coating	*(Trade Name/Application Rate)*
☐ Granules	*(Application Rate)*
☐ Gravel/Slag	*(Application Rate)*
☐ Ballast: ☐ Stone Size ☐ Pavers *(Beveled or square edge)*; ☐ Other:	
Ballast Weight (psf): Field: Perimeter: Corners:	

ROOF COVER/MEMBRANE:

(Please provide ALL applicable details including trade name, type, number of plies, thickness, reinforced, adhesive)

☐ Panel: ☐ Through Fastened Metal ☐ Standing Seam metal ☐ Fiber Reinforced Plastic (FRP) ☐ Other:			
☐ Single Ply:	☐ Adhered	☐ Fastened	☐Ballasted
☐ Built Up Roofing (BUR)			
☐ Modified Bitumen	☐ Lap Width in/mm	☐ Lap Adhesion Type	
☐ Spray Applied			
☐ Other:			

BASE SHEET:

(Please include Trade Name, Type, and Width)

☐ None		
Trade Name:	Width: ☐ 36 In. ☐ 1 meter (39 In.)	
☐ Fastened	☐ Adhered	
☐ Secured per RoofNav **OR**	☐ Per FM Global Loss Prevention Data Sheet 1-29	
Comments:		
☐ Lap Width in/mm	☐ Lap Adhesion Type	
☐ Air Retarder	☐ Vapor Retarder	

INSULATION

Layer	Trade Name	Thickness (In.)	Fastened	Adhered	Tapered
1. Top			☐	☐	☐
2. Next			☐	☐	☐
3. Next			☐	☐	☐
4. Next			☐	☐	☐

☐ Glass Fiber/Mineral Wool/Batt	☐ Facer Type/Vapor Barrier
☐ Thermal Barrier	

CHECKLIST FOR ROOFING SYSTEM

☐ Other:
☐ None

DECK:
(Please include manufacturer, type, yield strength, thickness/gage, etc.)

☐ Steel:	
☐ LWIC (Form Deck):	☐ Cementitious Wood Fiber:
☐ Concrete: ☐ Pre-cast panels or ☐ Cast in Place	
☐ Wood	
☐ Fiber Reinforced Cement	☐ Fiber Reinforced Plastic
☐ Gypsum: ☐ Plank	☐ Poured
☐ Other:	
Comments:	

ROOF STRUCTURE (Include Size, Gage, Etc.):

☐ Purlins ☐ "C" OR ☐ "Z"		
☐ Joists ☐ Wood OR ☐ Steel		
☐ Beams ☐ Wood OR ☐ Steel		
☐ Other:		
Spacing: Field:	Perimeter:	Corners:
Comments:		

FASTENERS USED IN ROOF ASSEMBLY:

Roof Cover Fasteners: Trade Name:		Length:	Diameter:
Stress Plate/Batten:			
Spacing: Field: **X**	Perimeter: **X**	Corners: **X**	
Insulation Fasteners: Trade Name:		Type:	
Size:		Stress Plate:	
Spacing: Field:	Perimeter:	Corners:	
Deck Or Roof Panels Fasteners: Trade Name:		Type:	
Length:		Size Washer:	
If Weld: Size:	Weld:	Washer:	
Deck Side Lap Fasteners: Field: **X**	Perimeter: **X**	Corners: **X**	
Spacing: Field: **X**	Perimeter: **X**	Corners: **X**	
Base Sheet Fasteners Trade Name:		Type:	
Head Diameter:		Length:	
Spacing: (Attached Sketches as necessary) Spacing Along Laps: Field:		Perimeter:	Corners:
No. Intermediate Rows: Field:		Perimeter:	Corners:
Spacing Along Intermediate Rows: Field:		Perimeter:	Corners:

PERIMETER FLASHING:
(Attach a detailed sketch of metal fascia, gravel stop, nailer, coping, etc.)

☐ FM Approved Flashing	Manufacturer/Trade Name:
☐ Other:	Flashing Max Wind Rating:
Nailer Size / Securement Per FM Global Data Sheet 1-49? ☐ Yes ☐ No	
Comments:	

DRAINAGE:

For new construction: Has roof drainage been designed by a Qualified Engineer per FM Global Loss Prevention Data Sheet 1-54 and the local building code? ☐ Yes ☐ No (Attach details)
For re-roofing and recovering: will the roof drainage be changed from the original design (for example: drain inserts, drains covered or removed, new expansion joints, blocked or reduced scupper size? ☐ Yes ☐ No If yes, were the changes reviewed by a Qualified Engineer? ☐ Yes ☐ No (Attach details)
Is secondary (emergency) roof drainage provided per FM Global Data Sheet 1-54? ☐ Yes ☐ No (Attach details)

CHECKLIST FOR ROOFING SYSTEM

FM Global OFFICE REVIEW
(Please leave blank for FM Global Office Review)

WIND:

Design Wind Speed: *(mph)*	Ground Terrain: ☐ B ☐ C ☐ D
Uplift Pressure in field: *(psf)*	Uplift Rating Required:
Adequate Uplift Rating Provided:	Adequate? ☐ Yes ☐ No

FIRE:

Internal Assembly Rating:	☐ Class 1	☐ Class 2	☐ Non-Combustible	
External Fire Rating:	☐ Class A	☐ Class B	☐ Class C	☐ None
Concealed Spaces?	☐ Yes	☐ No	Sprinklers below Roof?	☐ Yes ☐ No
Adequate?	☐ Yes	☐ No		

HAIL:

Hail Zone ☐ VSH ☐ SH ☐ MH	Hail Rating Provided ☐VSH ☐ SH ☐ MH
	FM 4473 Specification Class (if provided): ☐2 ☐3 ☐4
Adequate? ☐ Yes ☐ No	

COLLAPSE:

If standing seam, has collapse been reviewed? ☐ Yes ☐ No

COMMENTS:

STATE OF CONNECTICUT

UNIVERSITY OF CONNECTICUT

SUSAN HERBST
PRESIDENT

ACADEMIC BUILDING

AVERY POINT CAMPUS
1084 SHENNECOSSETT ROAD
GROTON, CT 06340

PROJECT NO.: 300098

ROOF REPLACEMENT
BID SET

PREPARED FOR:

UNIVERSITY PLANNING, DESIGN, AND CONSTRUCTION
31 LEDOYT RD. UNIT 3038
STORRS, CT 06269
860-486-3127

23 JANUARY 2019

PROJECT CONSULTANTS

Building Envelope and Structural Engineer:

SIMPSON GUMPERTZ & HEGER
Engineering of Structures and Building Enclosures

Simpson Gumpertz & Heger Inc.
41 Seyon Street, Building 1, Suite 500
Waltham, MA 02453

Hazardous Materials Consultant:

LANGAN

Langan Engineering & Environmental Services, Inc
555 Long Wharf Drive
New Haven, CT 06511-6107

DRAWING INDEX

GENERAL
AE0.0 COVER SHEET
AE0.1 SITE PLAN

BUILDING ENVELOPE
AE1.0 ROOF PLAN
AE2.0 PARTIAL BUILDING ELEVATIONS
AE3.0 PVC ROOF DETAILS
AE3.1 PVC ROOF DETAILS
AE3.2 WALL DETAILS
AE3.3 SHINGLE ROOF AND FLASHING DETAILS
AE3.4 WINDOW AND DOOR DETAILS

BUILDING STRUCTURE
S0.0 STRUCTURAL GENERAL NOTES
S1.0 ROOFTOP PLATFORM FRAMING PLAN AND ELEVATIONS
S1.1 SECTIONS

HAZARDOUS MATERIALS
HBM-01 HAZARDOUS BUILDING MATERIALS ABATEMENT PLAN

PROJECT SITE LOCATION
NO SCALE

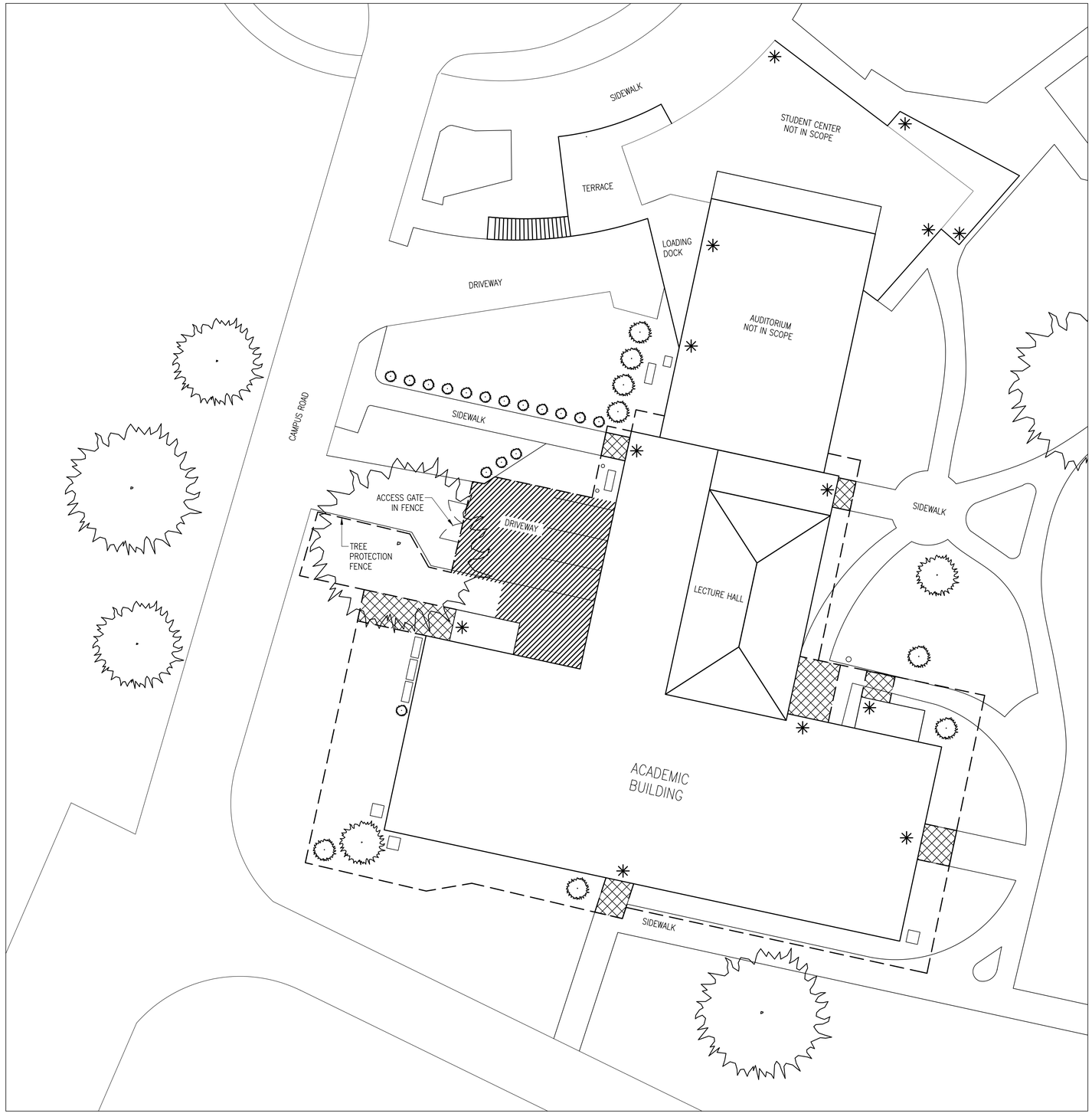

1 SITE PLAN

1/16" = 1'-0"

LEGEND

- PROPOSED LAYDOWN YARD
- CONSTRUCTION FENCE
- (E) DOOR
- PROPOSED OVERHEAD PROTECTION
- (E) TREE
- (E) MECHANICAL EQUIPMENT

TRUE NORTH

PROJECT NORTH

NOTES:

1. PROVIDE CONSTRUCTION FENCE AROUND PERIMETER OF WORK AREA AND LAYDOWN AREAS. CONSTRUCTION FENCE TO BE 8 FT. HIGH PORTABLE FENCE. SCRIM NOT REQUIRED.
2. EMERGENCY VEHICLE ACCESS TO EACH AREA MUST BE MAINTAINED. COORDINATE WITH UCONN PRIOR TO START OF CONSTRUCTION.
3. MAINTAIN ACCESS/EGRESS THROUGH (E) DOORS UNLESS PRIOR APPROVAL FOR TEMPORARY CLOSURE FROM UCONN AND FIRE MARSHALL.
4. PROVIDE OVERHEAD PROTECTION AS REQUIRED TO MAINTAIN SAFE EGRESS WHEN PERFORMING WORK ABOVE OR ADJACENT TO ENTRANCES; COORDINATE REQUIREMENTS WITH UCONN.
5. RESEED LAWN INSIDE CONSTRUCTION FENCE WHEN PROJECT IS COMPLETE.
6. PROTECT ALL (E) LANDSCAPING AND HARDSCAPE FROM DAMAGE. PROVIDE PROTECTION AROUND TREES. REPLACE LANDSCAPING AND HARDSCAPE DAMAGED DURING CONSTRUCTION.
7. PARKING ONSITE, EVEN WITHIN FENCED AREA, IS LIMITED. COORDINATE WITH SPECIFICATION REQUIREMENTS AND UCONN.
8. ROADWAYS AND PATHS TO REMAIN OPEN DURING CONSTRUCTION, EXCEPT FOR TEMPORARY CLOSURES COORDINATED WITH UCONN.

CERTIFICATION:

STATUS:
Bid Set

CONSULTANT:

SIMPSON GUMPERTZ & HEGER
Engineering of Structures and Building Enclosures
Simpson Gumpertz & Heger Inc. 781.907.9000
41 Seyon Street, Building 1, Suite 500 fax: 781.907.9009
Waltham, Massachusetts 02453 www.sgh.com

REVISIONS:

MARK	DATE	DESCRIPTION

UNIVERSITY OF CONNECTICUT
UNIVERSITY PLANNING, DESIGN, AND CONSTRUCTION
31 LEDOYT ROAD UNIT 3038
STORRS, CONNECTICUT 06269-3038
TELEPHONE: (860) 486-3127
FACSIMILE: (860) 486-3177

PROJECT:

Roof Replacement
Academic Building
Avery Point Campus
1084 Shennecossett Road
Groton, CT 06340

PROJECT NO: 300098
WORK ORDER NO:
FILE NAME:

AUTHOR: ARDERANANIAN
DRAFTER: CRWHITE
SCALE: AS NOTED
PRINT DATE: 23 JAN. 2019

SHEET TITLE:

SITE PLAN

SHEET:

AE0.1

SHEET: 2 of 13

SCOPE OF WORK:

1. HAZARDOUS MATERIALS: Abate hazardous materials associated with the scope of work. See HBM–01
2. MAIN BUILDING ROOF:
   a. Remove the gravel surfaced multi–ply built–up roof and fiberglass insulation. Remove asphalt layer on the (E) concrete deck. Remove any associated membrane and metal flashing at curbs, roof edges and rising walls.
   b. Inspect the concrete deck for damage and repair damaged concrete. Notify the Engineer if any (E) concrete deck damage extends to the (E) reinforcing bars. For bidding, assume 10 SF of shallow concrete deck repairs which does not reach reinforcing bars per Detail 11/AE3.0 and 10 CF of deep concrete deck repair which require patch reinforcement installation.
   c. Cut unused deck penetrations (i.e. steel columns, railing posts) flush with the concrete deck surface. Remove conduits, miscellaneous steel and other equipment scheduled for disposal.
   d. Fill in concrete deck openings less than 6 in. diameter as indicated on drawings with mineral wool and intumescent sealant; notify the Engineer if there are any openings larger than 6 in.
   e. Temporarily disconnect the rooftop mechanical units as necessary to raise the units to accommodate the increased roof system thickness. Coordinate the shut–off schedule with UConn facilities before disconnecting the units. Temporarily relocate all equipment which must remain operational during construction; coordinate temporary locations with UConn. Reinstall all equipment when work is complete; provide extended duct work, pipes, conduit, electric wires and associated insulation. Provide (N) steel posts for equipment above roof surface.
   f. Raise steel mechanical platforms as shown on Sheet S1.0 to provide min. 8 in. flashing height. Remove, modify, and provide (N) posts, kickers, and connection details as shown. Modify CMU as indicated to create space for (N) post and column connection. Repaint the steel platform beams.
   g. Remove the (E) roof drains set in the concrete deck. Inspect (E) pipes for blockage and debris. Provide (N) drains and connect to (E) pipes. Integrate with PVC roof. Repair concrete deck around drains.
   h. Provide PVC roof system, including vapor retarder, rigid insulation, insulation adhesive, cover board, and adhered PVC membrane. Include accessories, membrane and metal flashing at all roof penetrations and rising walls, and walkway pads.
   i. Replace the guardrail with a weighted guardrail system including outriggers at spacing required by manufacturer to meet building code and OSHA requirements.
3. STAIR LOW–SLOPED ROOFS (ALTERNATE 1):
   a. Remove the single–ply membrane roof (EPDM or thermoplastic), insulation, and adhered vapor retarder to the concrete deck. Remove asphalt layer on the (E) concrete deck. Remove any associated membrane and metal flashing and drain inserts. Notify the Engineer if (E) conditions vary.
   b. Inspect the concrete deck for damage and repair damaged concrete. Notify the Engineer if any (E) concrete deck damage extends to the (E) reinforcing bars. Allowance for concrete repair quantities included in main building roof quantity.
   c. Provide PVC roof system, including vapor retarder, rigid insulation, insulation adhesive, cover board, and adhered PVC membrane. Include accessories and membrane and metal flashing.
4. LECTURE HALL AND STAIR PENTHOUSE WALLS:
   a. At the lecture hall west wall, remove the (E) windows, interior and exterior wood trim, and metal flashing. Provide reinforced and grouted CMU masonry infill in the windows, providing openings for (E) HVAC ducts.
   b. At the stair penthouse, remove the (E) vinyl cladding, weather barrier, metal flashing and wood blocking to the (E) masonry backup. Remove the (E) windows and (E) perimeter metal flashing. Provide glass block windows to infill (E) window openings. Remove (E) steel door, and provide replacement door sized to accommodate the increased roof system thickness. Provide membrane and metal flashings around the window and door openings, and integrate with the wall membrane. Remove and replace the stair penthouse down leader.
   c. On the west and south elevation lecture hall walls and all stair penthouse walls, provide plywood, high–temperature self–adhered membrane, kraft paper and flat–seam aluminum panels. Panel color and style as selected by UConn. Integrate the self–adhered membrane and metal panels with the HVAC openings, wall penetrations, windows, and door. Remove and replace (E) metal down leader.
   d. Provide perimeter sealant around the doors and windows, and at transitions in the metal panels where shown on the Drawings.
   e. Paint the interior CMU lecture hall wall to match (E) color.
5. LECTURE HALL SHINGLE ROOF AND GUTTER
   a. Remove the bottom 5 ft of asphalt shingles and membrane underlayment to expose the (E) roof deck. Provide self–adhered membrane underlayment, metal flashing and asphalt shingles to match (E). Integrate the self–adhered membrane underlayment and asphalt shingles with the (E) roof membrane underlayment and shingles.
      (1) Alternate 2: Remove the asphalt shingles and membrane underlayment on the entire roof and provide self–adhered membrane underlayment, felt underlayment, and asphalt shingle roof system.
   b. Provide bird deterrent wire and post system at roof ridges and hips. Integrate triangular ridge post brackets with (E) or (N) asphalt shingles.
   c. Remove the metal gutter, metal down leaders, and associated flashing. Provide aluminum gutter to match (E) profile, gutter straps, and down leaders (including 2 to grade). Provide gutter expansion joints spaced 25' OC. Provide precast concrete splash blocks at bottom of all down leaders. See AE1.0 and AE2.0 for down leader locations.
6. GENERAL AND SITE:
   a. Dispose all debris caused by this Contract.
   b. Protect the public, the building and its contents, and the grounds from damage during this Contract at all times.
   c. Repair or replace landscaping, including trees, shrubs, or other plantings disturbed during the Work of the Contract with new to match existing, unless otherwise noted. Regrade and reseed any grass area damaged as a result of the Work. Repair any walkways or paved areas damaged as a result of the Work.

LEGEND:

- PVC ROOF REPLACING (E) BUILT–UP ROOF; SEE 3/AE3.0
- ASPHALT SHINGLE ROOF REPLACEMENT WITH SELF–ADHERED MEMBRANE; SEE 1/AE3.3
- ALTERNATE 2: ASPHALT SHINGLE ROOF REPLACEMENT WITH FELT AND SELF–ADHERED MEMBRANE; SEE 1/AE3.3
- (E) ROOF NOT IN SCOPE
- ALTERNATE 1: PVC ROOF REPLACING (E) ROOF (EPDM OR THERMOPLASTIC); SEE 3/AE3.0
- M — (E) MECHANICAL EQUIPMENT THAT PENETRATES ROOFING SYSTEM; SEE DETAIL 6/AE3.0, SIM.
- M — (E) MECHANICAL EQUIPMENT, DUCT, OR STEEL PLATFORM LOCATED ABOVE THE ROOF (NON PENETRATING)
- (E) STEEL PLATFORM SUPPORTING MECHANICAL EQUIPMENT, MODIFY TO ACCOMMODATE RAISED ROOF (SEE S1.0 AND S1.1)
- WALKWAY PADS, SEE 10/AE3.0
- R.D. — ROOF DRAIN; SEE 4/AE3.0
- (E) VENT PENETRATION; SEE 6/AE3.0
- (E) SINGLE PIPE PENETRATION; SEE 7/AE3.0, SIM.
- (E) SANITARY VENT PIPE PENETRATION, SEE 8/AE3.0
- (E) MULTIPLE PIPE PENETRATION; SEE 2/AE3.1
- EJ — GUTTER EXPANSION JOINT, SEE 4/AE3.3
- BIRD DETERRENT WIRE AND POST SYSTEM AT SHINGLE ROOF RIDGE AND HIPS
- REMOVE (E) GUARDRAIL REPLACE WITH NON–PENETRATING WEIGHTED GUARDRAIL
- REMOVE (E) GUARDRAIL
- NON–PENETRATING WEIGHTED GUARDRAIL
- X — GUY WIRE ANCHOR; SEE 4/AE3.1
- ROOF SLOPE DIRECTION

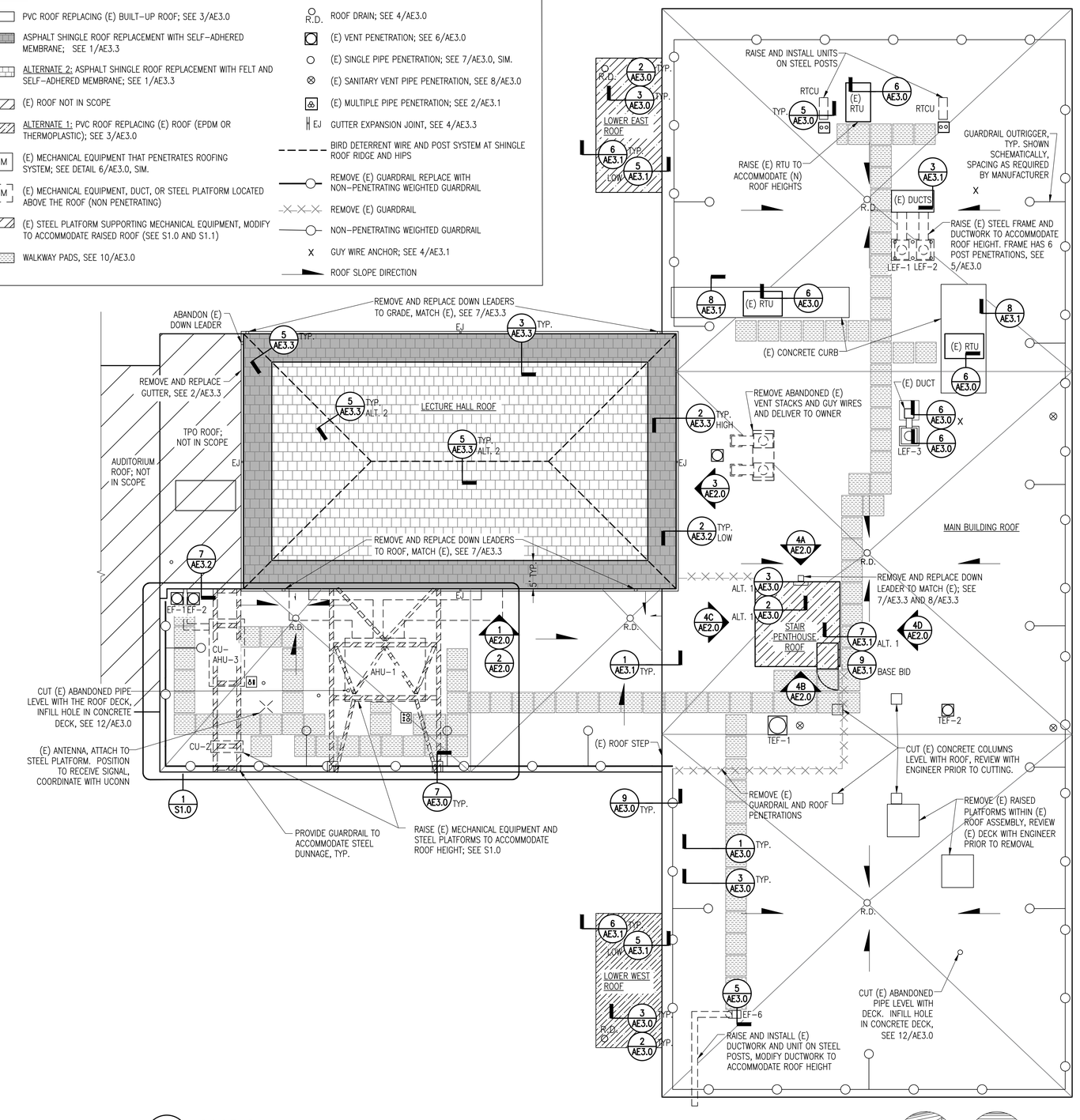

1 ROOF PLAN

1/8"=1'–0"

TRUE NORTH PROJECT NORTH

CERTIFICATION:

STATUS: Bid Set

CONSULTANT:

SIMPSON GUMPERTZ & HEGER

Engineering of Structures and Building Enclosures

Simpson Gumpertz & Heger Inc. 781.907.9000
41 Seyon Street, Building 1, Suite 500 fax 781.907.9009
Waltham, Massachusetts 02453 www.sgh.com

REVISIONS:

MARK	DATE	DESCRIPTION

UNIVERSITY OF CONNECTICUT
UNIVERSITY PLANNING, DESIGN, AND CONSTRUCTION
31 LEDOYT ROAD UNIT 3038
STORRS, CONNECTICUT 06269-3038
TELEPHONE: (860) 486-3127
FACSIMILE: (860) 486-3177

PROJECT:

Roof Replacement
Academic Building
Avery Point Campus
1084 Shennecossett Road
Groton, CT 06340

PROJECT NO: 300098
WORK ORDER NO:
FILE NAME:

AUTHOR: ARDERANANIAN
DRAFTER: CRWHITE
SCALE: AS NOTED
PRINT DATE: 23 JAN. 2019
SHEET TITLE:

ROOF PLAN

SHEET:

AE1.0

SHEET: 3 of 13

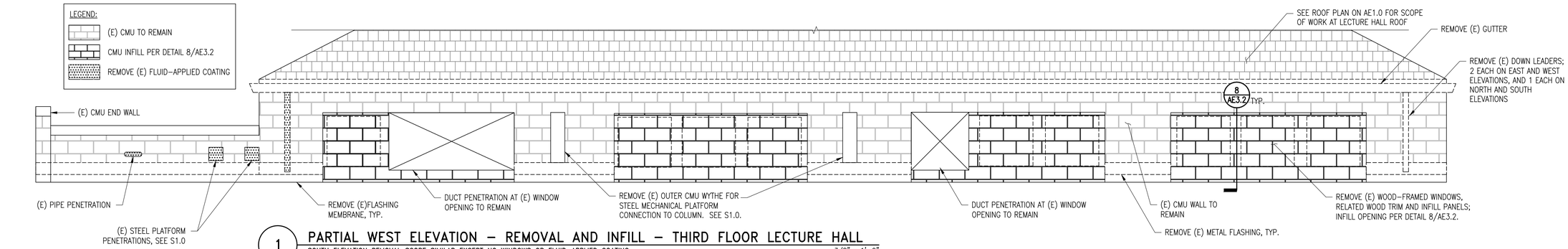

1 PARTIAL WEST ELEVATION – REMOVAL AND INFILL – THIRD FLOOR LECTURE HALL

SOUTH ELEVATION REMOVAL SCOPE SIMILAR EXCEPT NO WINDOWS OR FLUID–APPLIED COATING

3/8" = 1'–0"

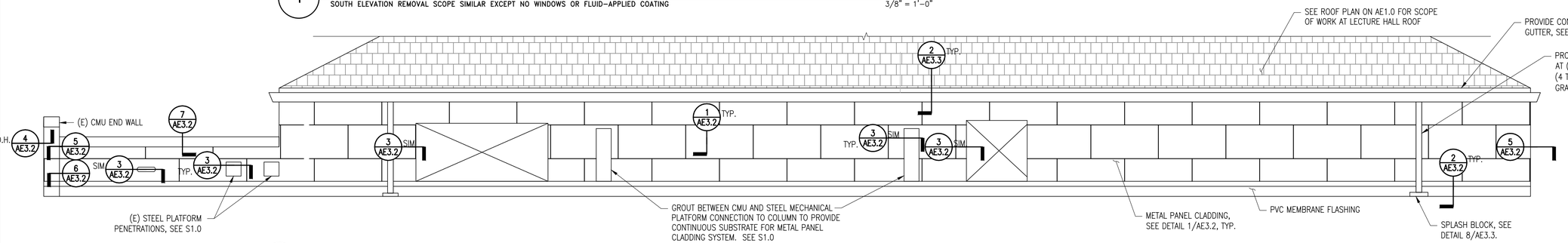

2 PARTIAL WEST ELEVATION – THIRD FLOOR LECTURE HALL

3/8" = 1'–0"

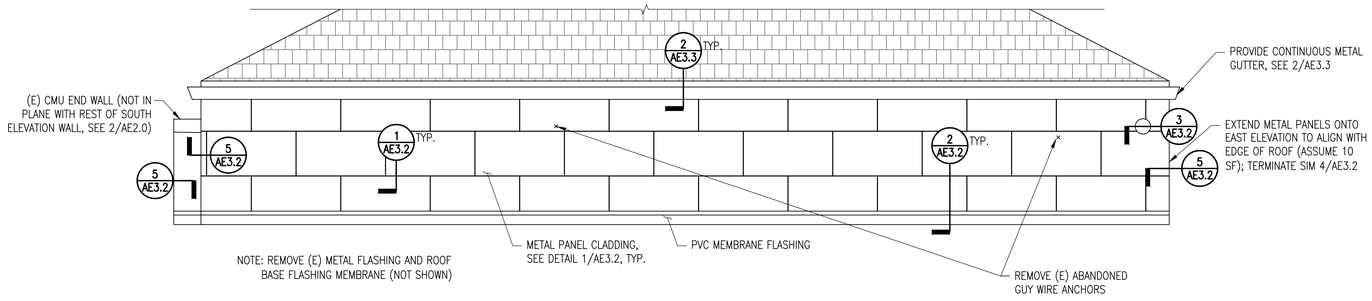

3 PARTIAL SOUTH ELEVATION – THIRD FLOOR LECTURE HALL

3/8" = 1'–0"

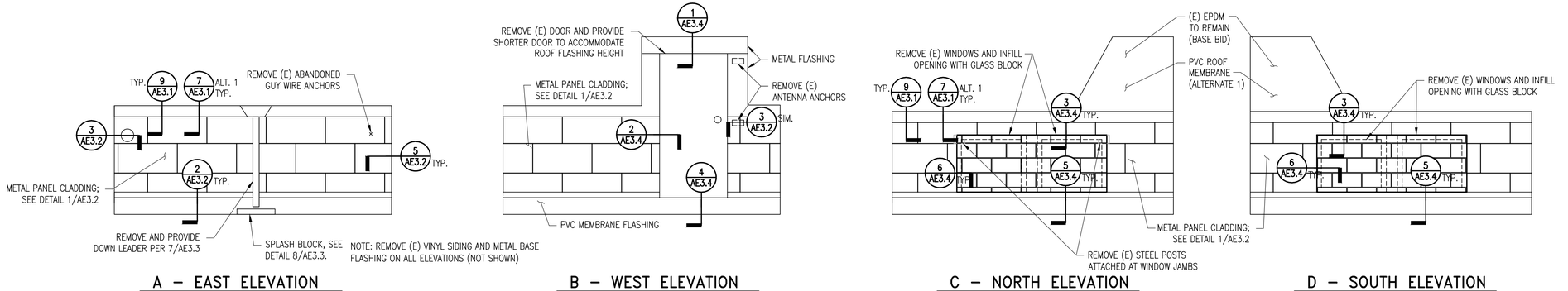

4 PARTIAL ELEVATIONS – STAIR TOWER PENTHOUSE

3/8" = 1'–0"

CERTIFICATION:

STATUS:
Bid Set

CONSULTANT:

SIMPSON GUMPERTZ & HEGER
Engineering of Structures and Building Enclosures
Simpson Gumpertz & Heger Inc.
41 Seyon Street, Building 1, Suite 500
Waltham, Massachusetts 02453
781.907.9000
fax: 781.907.9009
www.sgh.com

REVISIONS:

MARK	DATE	DESCRIPTION

UNIVERSITY OF CONNECTICUT
UNIVERSITY PLANNING, DESIGN, AND CONSTRUCTION
31 LEDOYT ROAD UNIT 3038
STORRS, CONNECTICUT 06269-3038
TELEPHONE: (860) 486-3127
FACSIMILE: (860) 486-3177

PROJECT:
Roof Replacement
Academic Building
Avery Point Campus
1084 Shennecossett Road
Groton, CT 06340

PROJECT NO: 300098
WORK ORDER NO:
FILE NAME:

AUTHOR: ARDERANANIAN
DRAFTER: CRWHITE
SCALE: AS NOTED
PRINT DATE: 23 JAN. 2019
SHEET TITLE:
PARTIAL BUILDING ELEVATIONS

SHEET:
AE2.0

SHEET: 4 of 13

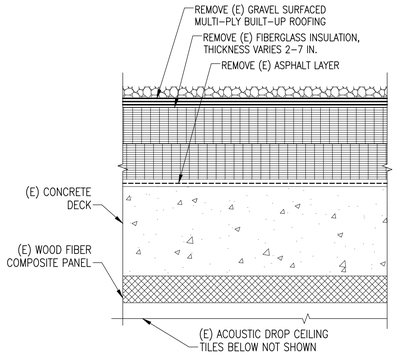

1 EXISTING BUILT-UP ROOF REMOVAL N.T.S.

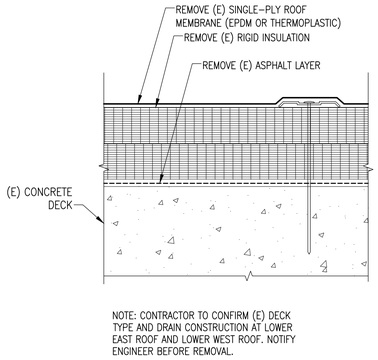

2 SINGLE-PLY ROOF REMOVAL N.T.S.
ALTERNATE 1

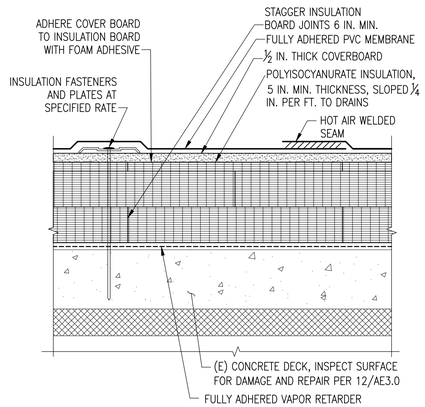

3 TYPICAL PVC ROOF SYSTEM N.T.S.

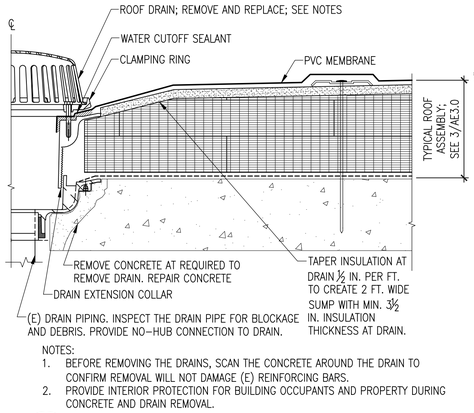

4 TYPICAL ROOF DRAIN N.T.S.

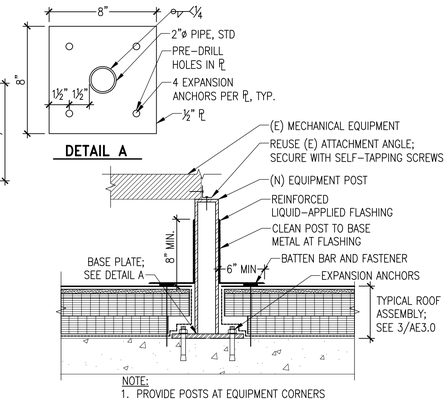

5 MECHANICAL EQUIPMENT ON POSTS N.T.S.

6 MECHANICAL EQUIPMENT PENETRATION N.T.S.
VENT SHOWN, OTHER EQUIPMENT SIMILAR

7 LIQUID APPLIED FLASHING N.T.S.
ANGLE SHOWN, PIPE, TUBE SIMILAR

8 SANITARY VENT PIPE PENETRATION N.T.S.

9 TYPICAL ROOF EDGE N.T.S.
NOTE: WEIGHTED GUARD RAIL NOT SHOWN FOR CLARITY

10 WALKWAY PADS N.T.S.

11 CONCRETE DECK REPAIR N.T.S.

12 CONCRETE DECK INFILL N.T.S.

13 TYPICAL ROOD EDGE FLASHING JOINT N.T.S.

CERTIFICATION:

STATUS:
Bid Set

CONSULTANT:

SIMPSON GUMPERTZ & HEGER
Engineering of Structures and Building Enclosures
Simpson Gumpertz & Heger Inc. 781.907.9000
41 Seyon Street, Building 1, Suite 500 fax 781.907.9009
Waltham, Massachusetts 02453 www.sgh.com

REVISIONS:

MARK	DATE	DESCRIPTION

UNIVERSITY OF CONNECTICUT
UNIVERSITY PLANNING, DESIGN, AND CONSTRUCTION
31 LEDOYT ROAD UNIT 3038
STORRS, CONNECTICUT 06269-3038
TELEPHONE: (860) 486-3127
FACSIMILE: (860) 486-3177

PROJECT:
Roof Replacement
Academic Building
Avery Point Campus
1084 Shennecossett Road
Groton, CT 06340

PROJECT NO: 300098
WORK ORDER NO:
FILE NAME:

AUTHOR: ARDERANANIAN
DRAFTER: CRWHITE
SCALE: AS NOTED
PRINT DATE: 23 JAN. 2019

SHEET TITLE:
PVC ROOF DETAILS

SHEET:
AE3.0

SHEET: 5 of 13

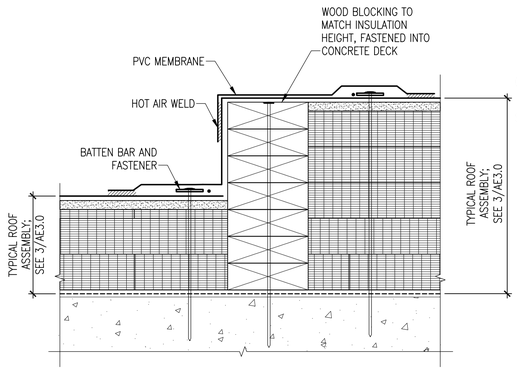

1 ROOF STEP DOWN

N.T.S.

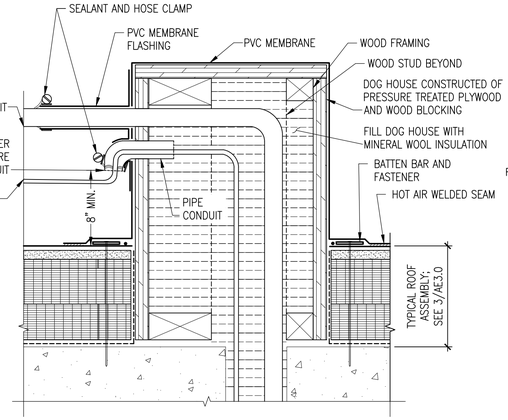

2 MULTI–PIPE PENETRATION

N.T.S.

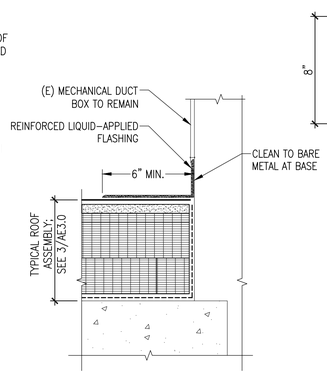

3 MECHANICAL DUCT BOX

N.T.S.

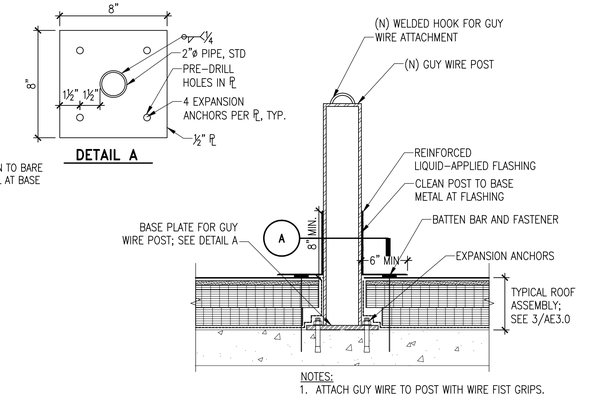

4 GUY WIRE PENETRATION

N.T.S.

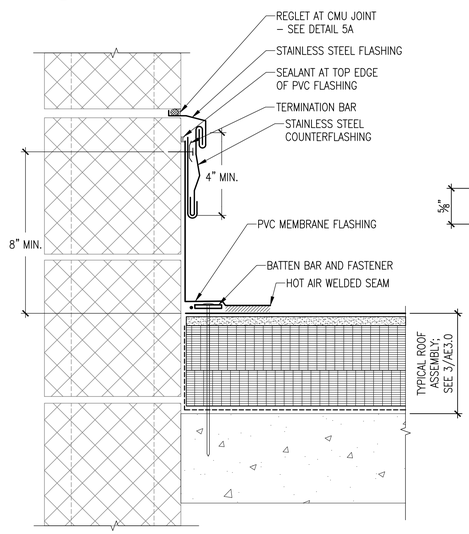

5 RISING WALL AT LOW ROOFS

ALTERNATE 1

N.T.S.

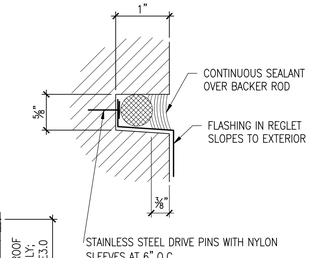

DETAIL 5A

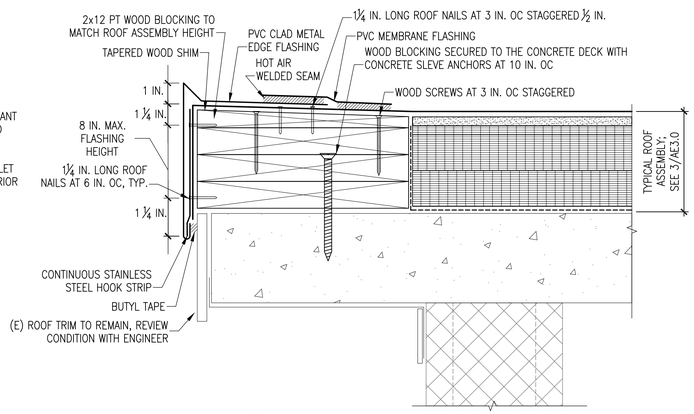

6 ROOF EDGE AT LOW ROOFS

ALTERNATE 1

N.T.S.

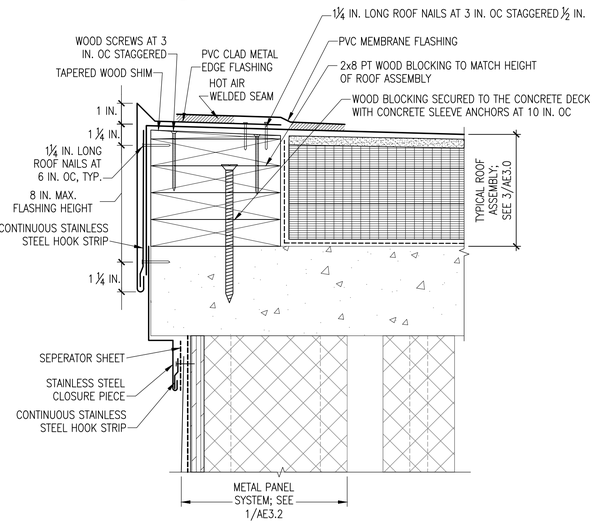

7 STAIRTOWER ROOF EDGE

ALTERNATE 1

N.T.S.

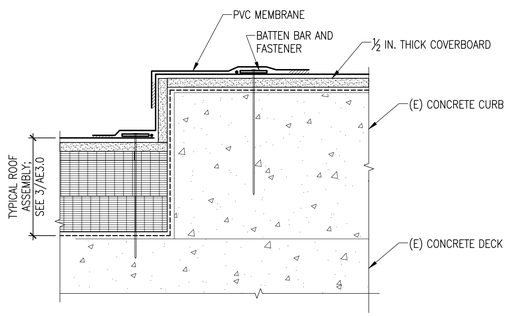

8 CONCRETE CURB

N.T.S.

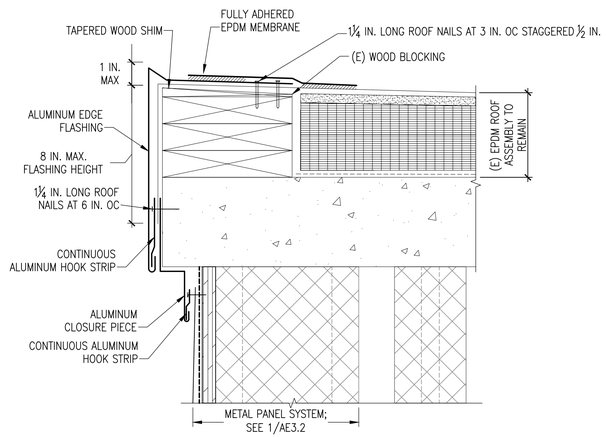

9 STAIRTOWER ROOF EDGE

N.T.S.

CERTIFICATION:

STATUS:
Bid Set

CONSULTANT:

SIMPSON GUMPERTZ & HEGER
Engineering of Structures and Building Enclosures
Simpson Gumpertz & Heger Inc. 781.907.9000
41 Seyon Street, Building 1, Suite 500 fax 781.907.9009
Waltham, Massachusetts 02453 www.sgh.com

REVISIONS:

MARK	DATE	DESCRIPTION

UNIVERSITY OF CONNECTICUT
UNIVERSITY PLANNING, DESIGN, AND CONSTRUCTION
31 LEDOYT ROAD UNIT 3038
STORRS, CONNECTICUT 06269-3038
TELEPHONE: (860) 486-3127
FACSIMILE: (860) 486-3177

PROJECT:
Roof Replacement
Academic Building
Avery Point Campus
1084 Shennecossett Road
Groton, CT 06340

PROJECT NO: 300098
WORK ORDER NO:
FILE NAME:

AUTHOR: ARDERANANIAN
DRAFTER: CRWHITE
SCALE: AS NOTED
PRINT DATE: 23 JAN. 2019

SHEET TITLE:
PVC ROOF DETAILS

SHEET:
AE3.1

SHEET: 6 of 13

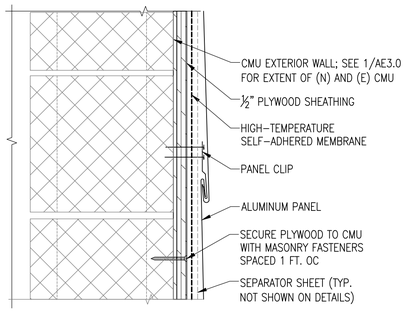

1 TYPICAL METAL PANEL SYSTEM

N.T.S.

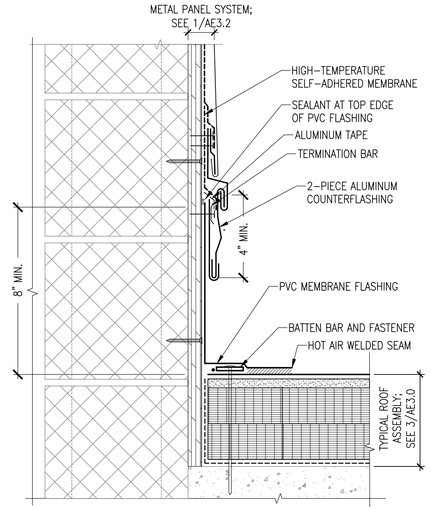

2 BASE OF CMU WALL

N.T.S.

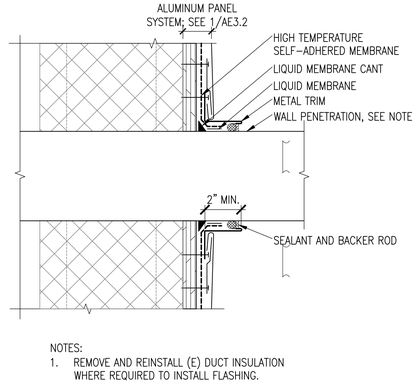

NOTES:
1. REMOVE AND REINSTALL (E) DUCT INSULATION WHERE REQUIRED TO INSTALL FLASHING.

3 TYPICAL WALL PENETRATION

N.T.S.

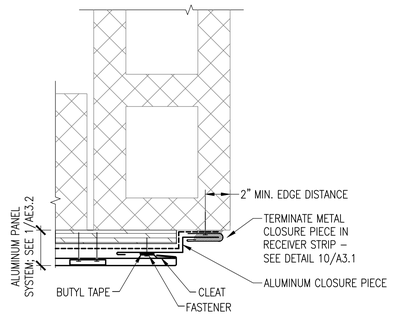

4 METAL PANEL TERMINATION

N.T.S.

5 METAL PANEL OUTSIDE CORNER

N.T.S.

6 METAL PANEL INSIDE CORNER

N.T.S.

7 (E) TPO ROOF TO METAL PANEL

N.T.S.

8 CMU INFILL

N.T.S.

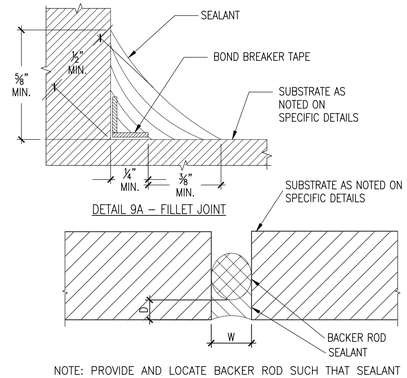

NOTE: PROVIDE AND LOCATE BACKER ROD SUCH THAT SEALANT DEPTH (D) EQUALS 1/2W, TO A MAXIMUM DEPTH OF 1/2".

DETAIL 9B – BUTT JOINT

9 CONVENTIONAL SEALANT JOINTS

N.T.S.

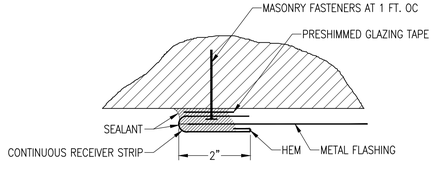

10 TYPICAL RECEIVER STRIP

N.T.S.

CERTIFICATION:

STATUS:
Bid Set

CONSULTANT:

SIMPSON GUMPERTZ & HEGER
Engineering of Structures and Building Enclosures
Simpson Gumpertz & Heger Inc.
41 Seyon Street, Building 1, Suite 500
Waltham, Massachusetts 02453
781.907.9000
fax: 781.907.9009
www.sgh.com

REVISIONS:

MARK	DATE	DESCRIPTION

UNIVERSITY OF CONNECTICUT
UNIVERSITY PLANNING, DESIGN, AND CONSTRUCTION
31 LEDOYT ROAD UNIT 3038
STORRS, CONNECTICUT 06269-3038
TELEPHONE: (860) 486-3127
FACSIMILE: (860) 486-3177

PROJECT:
Roof Replacement
Academic Building
Avery Point Campus
1084 Shennecossett Road
Groton, CT 06340

PROJECT NO: 300098
WORK ORDER NO:
FILE NAME:

AUTHOR: ARDERANANIAN
DRAFTER: CRWHITE
SCALE: AS NOTED
PRINT DATE: 23 JAN. 2019

SHEET TITLE:
WALL DETAILS

SHEET:
AE3.2

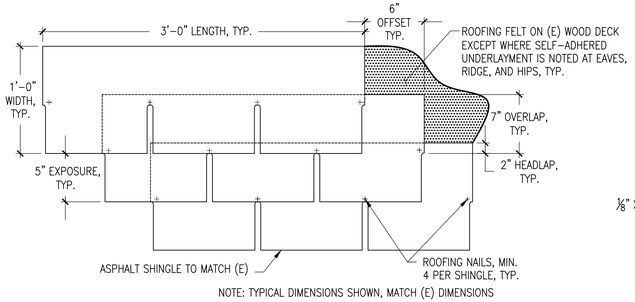

NOTE: TYPICAL DIMENSIONS SHOWN, MATCH (E) DIMENSIONS

1 TYPICAL SHINGLE ROOF

SCALE: N.T.S.

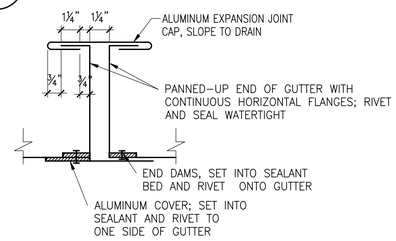

SECTION DETAIL A–A

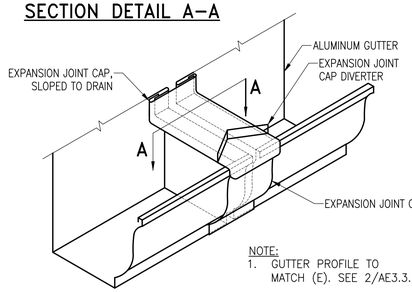

NOTE:
1. GUTTER PROFILE TO MATCH (E). SEE 2/AE3.3.

4 GUTTER EXPANSION JOINT

N.T.S.

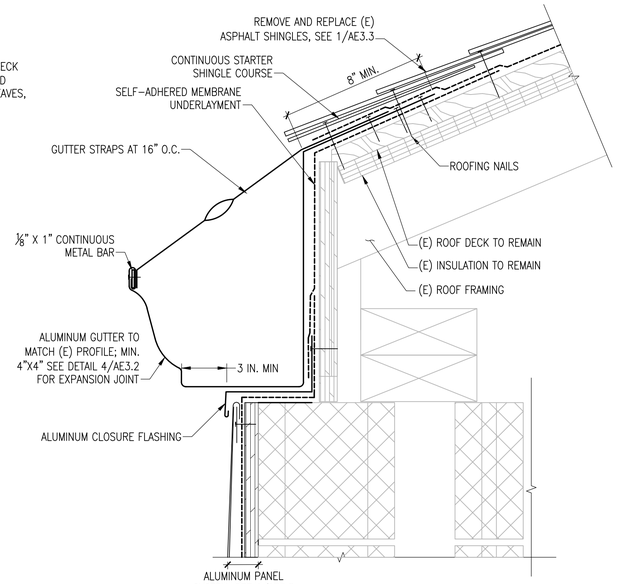

2 GUTTER AND SHINGLE ROOF DETAIL

N.T.S.

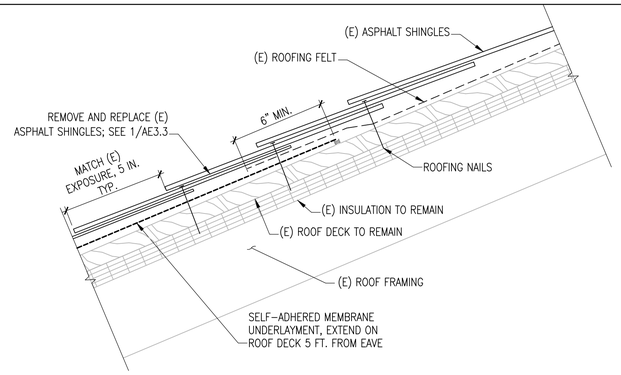

3 NEW TO EXISTING SHINGLE ROOF TRANSITION

N.T.S.

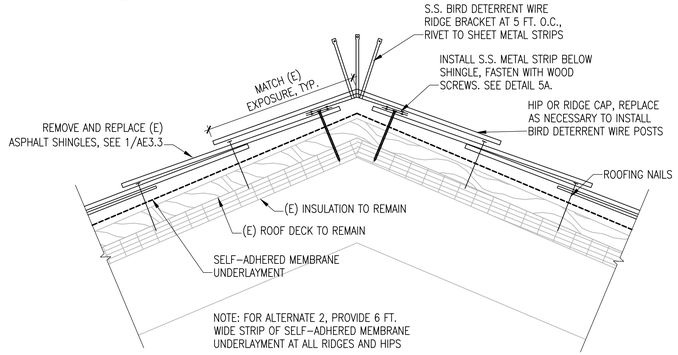

NOTE: FOR ALTERNATE 2, PROVIDE 6 FT. WIDE STRIP OF SELF–ADHERED MEMBRANE UNDERLAYMENT AT ALL RIDGES AND HIPS

5 SHINGLE ROOF HIP AND RIDGE DETAIL

N.T.S.

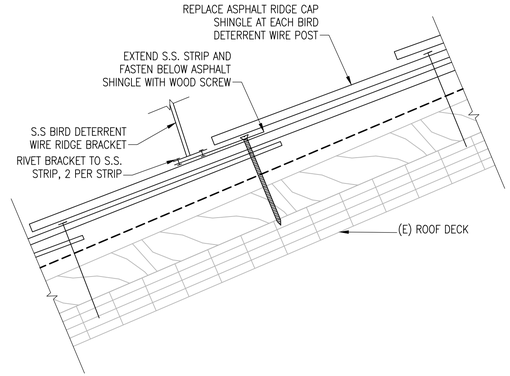

5A BIRD WIRE BRACKET RIDGE SECTION

N.T.S.

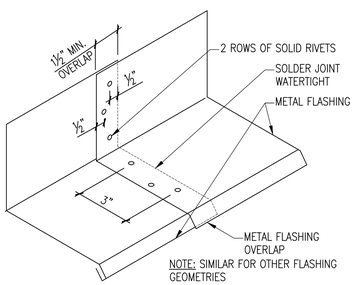

NOTE: SIMILAR FOR OTHER FLASHING GEOMETRIES

6 TYPICAL RIVETED AND SOLDERED FLASHING JOINT

N.T.S.

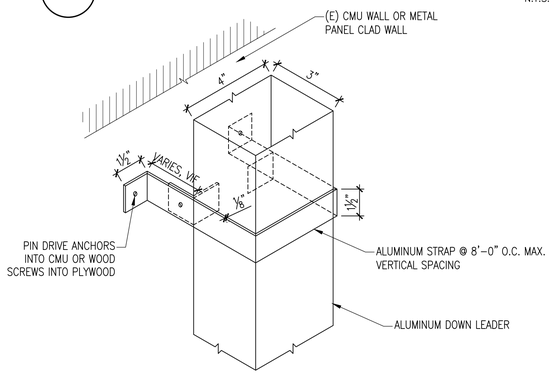

7 TYPICAL DOWNLEADER BRACKET

N.T.S.

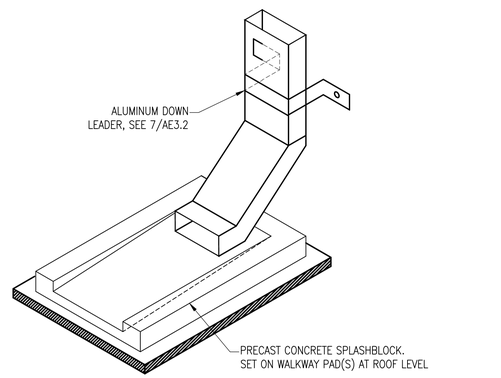

8 SPLASH BLOCK

N.T.S.

CERTIFICATION:

STATUS:
Bid Set

CONSULTANT:

SIMPSON GUMPERTZ & HEGER
Engineering of Structures and Building Enclosures
Simpson Gumpertz & Heger Inc. 781.907.9000
41 Seyon Street, Building 1, Suite 500 fax 781.907.9009
Waltham, Massachusetts 02453 www.sgh.com

REVISIONS:

MARK	DATE	DESCRIPTION

UNIVERSITY OF CONNECTICUT
UNIVERSITY PLANNING, DESIGN, AND CONSTRUCTION
31 LEDOYT ROAD UNIT 3038
STORRS, CONNECTICUT 06269-3038
TELEPHONE: (860) 486-3127
FACSIMILE: (860) 486-3177

PROJECT:

Roof Replacement
Academic Building
Avery Point Campus
1084 Shennecossett Road
Groton, CT 06340

PROJECT NO: 300098
WORK ORDER NO:
FILE NAME:

AUTHOR: ARDERANANIAN
DRAFTER: CRWHITE
SCALE: AS NOTED
PRINT DATE: 23 JAN. 2019

SHEET TITLE:
SHINGLE ROOF AND FLASHING DETAILS

SHEET:
AE3.3

SHEET: 8 of 13

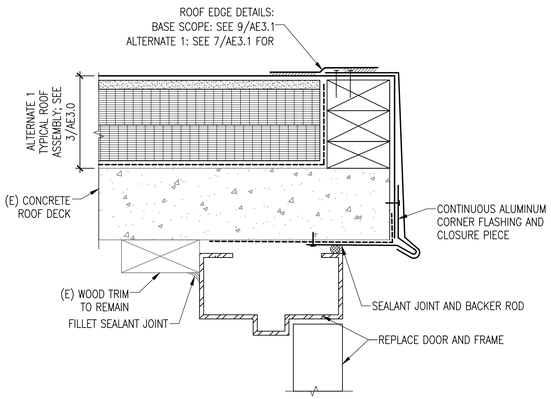

1 DOOR HEAD

ALTERNATE 1 SHOWN – SIMILAR DOOR SCOPE FOR BASE BID

N.T.S.

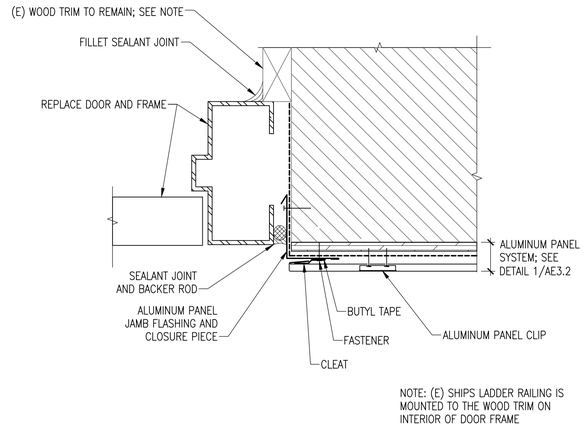

2 DOOR JAMB

N.T.S.

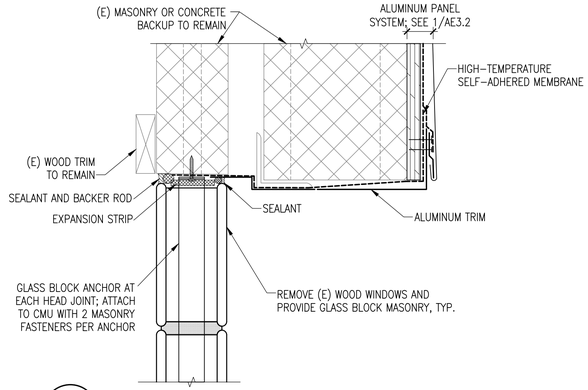

3 WINDOW HEAD

N.T.S.

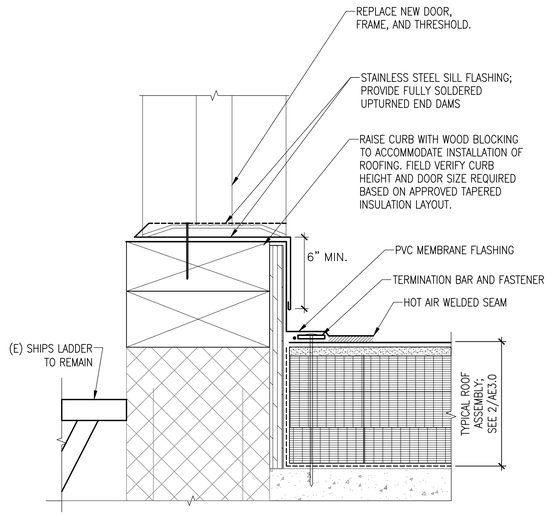

4 DOOR THRESHOLD

N.T.S.

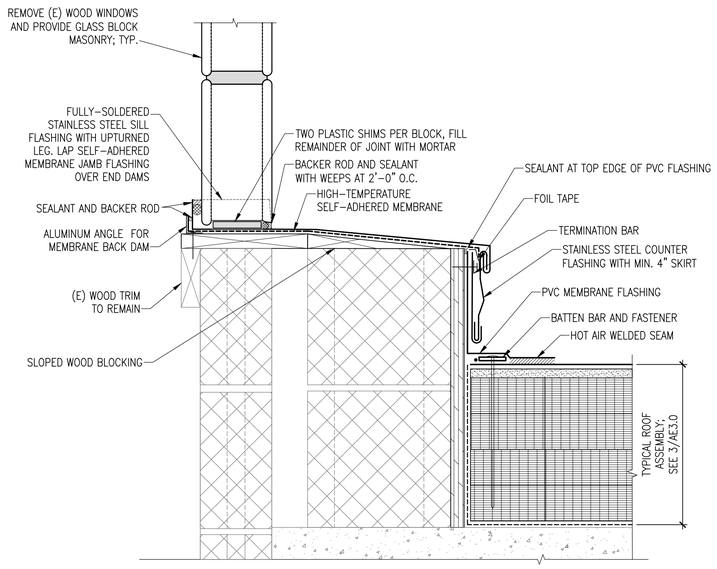

5 WINDOW SILL

N.T.S.

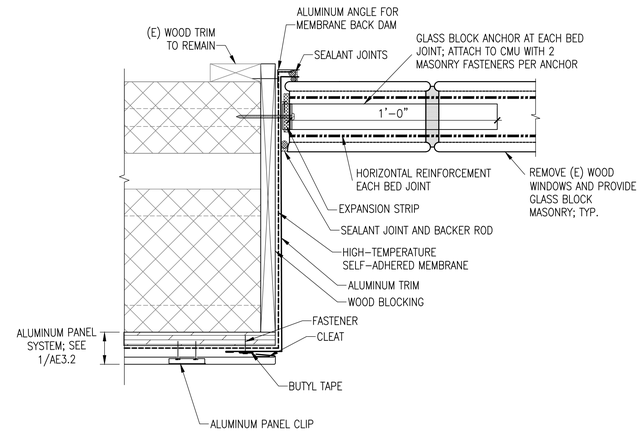

6 WINDOW JAMB

N.T.S.

CERTIFICATION:

STATUS:
Bid Set

CONSULTANT:

SIMPSON GUMPERTZ & HEGER
Engineering of Structures and Building Enclosures
Simpson Gumpertz & Heger Inc. 781.907.9000
41 Seyon Street, Building 1, Suite 500 fax: 781.907.9009
Waltham, Massachusetts 02453 www.sgh.com

REVISIONS:

MARK	DATE	DESCRIPTION

UNIVERSITY OF CONNECTICUT
UNIVERSITY PLANNING, DESIGN, AND CONSTRUCTION
31 LEDOYT ROAD UNIT 3038
STORRS, CONNECTICUT 06269-3038
TELEPHONE: (860) 486-3127
FACSIMILE: (860) 486-3177

PROJECT:

Roof Replacement
Academic Building
Avery Point Campus
1084 Shennecossett Road
Groton, CT 06340

PROJECT NO: 300098
WORK ORDER NO:
FILE NAME:

AUTHOR: ARDERANANIAN
DRAFTER: CRWHITE
SCALE: AS NOTED
PRINT DATE: 23 JAN. 2019

SHEET TITLE:

WINDOW AND DOOR DETAILS

SHEET:

AE3.4

GENERAL STRUCTURAL NOTES

PART 1 - GENERAL REQUIREMENTS AND DESIGN CRITERIA

1.1 GENERAL
- A. The work of these drawings addresses structural information only. The structural documents include these S-series Drawings and General Notes.
- B. Unless otherwise noted, details, sections and notes contained in the structural contract documents shall be considered typical for all similar conditions even if not explicitly referenced.

1.2 ELEVATIONS & DIMENSIONS
- A. Field verify all elevations and dimensions before proceeding with construction.

1.3 BUILDING CODE
- A. Connecticut Building Code: 2015 International Building Code with Connecticut State Amendments Code (CSBC 2018)

1.4 DESIGN LOADS
- A. Live loads
  - 1. Roofs — see snow provisions.
- B. Dead Loads — All permanent stationary construction.
- C. Seismic Load Parameters

1. Seismic Importance Factor, I_e	1.25
2. Spectral Response Acceleration, S_s	0.158
3. Spectral Response Acceeration, S_1	0.058
4. Site Class	D
5. Spectral Response Coefficient, S_{DS}	0.169
6. Spectral Response Coefficient, S_{D1}	0.092
7. Component Amplification Factor, a_p	1
8. Component Response Modification Factor, R_p	2.5

- D. Wind Load Parameters

1. Ultimate Design Wind Speed, V_{ult}	145 mph
2. Wind Importance Factor, I_w	1.15
3. Wind Exposure	D
4. Wind Velocity Pressure, q_z	61psf

- A. Snow Load Parameters

Snow Load Parameters

1. Ground Snow Load, P_g	30psf
2. Snow Exposure Factor, C_e	1.0
3. Snow Load Importance Factor, I_s	1.1
4. Thermal Factor, C_t	1.0
5. Flat Roof Snow Load, P_f	24psf

1.5 SUBMITTALS
- A. Submit shop drawings, certifications, product data, etc. as described herein to the Engineer for approval prior to fabrication and installation.

PART 2 - STRUCTURAL STEEL

2.1 STRUCTURAL SHAPES:
- A. Wide Flange Shapes: ASTM A992
- B. Angles: ASTM A36, U.O.N.
- C. Channels: ASTM A36, U.O.N.
- D. Plates: ASTM A36, U.O.N.

2.2 HOLLOW STRUCTURAL SHAPES (HSS):
ASTM A500 Grade B– (Fy = 46,000 PSI) or ASTM A1085 (Fy=50,000 PSI)

2.3 BOLTED CONNECTIONS:
ASTM A325 and A490. See Typical Steel Details. Tension-control bolts acceptable.

2.4 WELDING ELECTRODES
Conform to AWS Specifications for electrodes based on welding process and the type and grade of steel. E70XX electrodes (min.) for fillet welds.

2.5 FABRICATION:
Shop fabricate to greatest extent possible by welding including beam stiffeners, column caps and bases, holes and connections. Submit complete shop drawings from field dimensions for the Engineer's approval of all structural steel prior to fabrication.

2.6 ERECTION:
Provide anchor rods, steel wedges, threaded screws, or shims to support and plumb all columns. Grout solid under base plates immediately after columns are plumb. Do not field cut or field modify any structural steel without prior written approval by Engineer for each specific case.

2.7 PAINT:
Clean and remove all loose paint on Platform B. Apply primer and finish coat per specifications.

2.8 HOT-DIP GALVANIZING:
- A. All new steel, including but not limited to structural members, connection materials and misc. metals shall be hot-dip galvanized. All field welds, or areas where hot-dip galvanizing is damaged, shall be touched-up with a zinc-rich paint ("cold galvanizing") after steel is completely installed.
- B. Plug weld vent holes after galvanizing.
- C. Seal weld all seams not otherwise welded.

2.9 STANDARD SPECIFICATIONS AND REFERENCE STANDARDS
- A. AISC 360-10 Specification for Structural Steel Buildings
- B. AISC 341-10 Seismic Provisions for Structural Steel Buildings, Including Supplement No.1
- C. AWS D1.1-10 Structural Welding Code - Steel

STATEMENT OF SPECIAL INSPECTIONS

LOCATION	AVERY POINT CAMPUS, 1084 SHENNECOSSETT ROAD, GROTON, CT 06340
OWNER	UNIVERSITY OF CONNECTICUT
DESIGN PROFESSIONAL IN CHARGE	ERIK W. FARRINGTON

This Statement of Special Inspections is submitted as a condition for permit issuance in accordance with the Special Inspection and Structural Testing requirements of the 2018 Connecticut State Building Code (CSBC) (2015 International Building Code with Connecticut State Amendments). It includes a schedule of Special Inspection services applicable to this project as well as the name of the Special Inspection coordinator and the identity of other approved agencies to be retained for conducting these inspections and tests. This Statement of Special Inspections encompasses the following disciplines: STRUCTURAL. The Special Inspection Coordinator shall keep records of all inspections and shall furnish inspection reports to the Building Official and the Registered Design Professional in Responsible Charge (RDP). Discovered discrepancies shall be brought to the immediate attention of the contractor for correction. If such discrepancies are not corrected, the discrepancies shall be brought to the attention of the Building Official and the RDP. The Special Inspection program does not relieve the contractor of his or her responsibilities for quality assurance.

Interim reports shall be submitted to the Building Official and the RDP.

A Final Report of Special Inspections documenting completion of all required Special Inspections, testing, and correction of any discrepancies noted in the inspections shall be submitted by the Special Inspection Coordinator prior to issuance of a Certificate of Use and Occupancy.

Job site safety and means and methods of construction are solely the responsibility of the contractor.

Interim reports shall be submitted monthly.

In accordance with IBC 2015 with Connecticut Amendments, the Observations and Inspections listed below are not required.
- Structural observations for wind and seismic provision (Section 1704.5)
- Special Inspections for Wind Resistance (Section 1705.10)
- Special Inspections for Seismic Resistance for Structural Steel (Section 1705.11.1)
- Special Inspections for Seismic Resistance for Architectural Components (Section 1705.11.5)

SCHEDULE OF INSPECTION AND TESTING AGENCIES

SPECIAL INSPECTION AGENCIES	FIRM	ADDRESS	TELEPHONE #
Inspector	TBA		

Note: The inspectors and testing agencies shall be engaged by the Owner or the Owner's Agent in accordance with Section 1704.2 the 2015 International Building Code (IBC 2015), as referenced in CSBC and not by the Contractor or Subcontractor whose work is to be inspected or tested. Any conflict of interest must be disclosed to the Building Official prior to commencing work.

STATEMENT OF CONTRACTOR'S RESPONSIBILITY

In accordance with IBC 2015 Section 1704.4, as referenced in CSBC, each contractor responsible for the construction or fabrication of a main wind-force resisting system or a seismic-force-resisting system or a wind- or seismic-resisting component listed in the statement of special inspections above must submit a Statement of Responsibility to the Structural Engineer of Record, the building official and the owner prior to commencement of work on the system. The contractor's statement of responsibility shall contain acknowledgement of awareness of the special requirements contained in the statement of special inspections.

QUALIFICATIONS OF INSPECTORS AND TESTING TECHNICIANS

The qualifications of all personnel performing Special Inspection and testing activities are subject to the approval of the Building Official. The credentials of all Inspectors and testing technicians shall be provided.

Key for Minimum Qualifications of Inspection Agents:

When the Registered Design Professional in Responsible Charge deems it appropriate that the individual performing a stipulated test or inspection have a specific certification or license as indicated below, such designation shall appear below the Agency Number on the Schedule.

PE/SE	Structural Engineer – a licensed PE specializing in the design of building structures
EIT	Engineer-In-Training – a graduate engineer who has passed the Fundamentals of Engineering examination
AMERICAN WELDING SOCIETY (AWS) CERTIFICATION	
AWS-CWI	Certified Welding Inspector
AWS/AISC-SSI	Certified Structural Steel Inspector
INTERNATIONAL CODE COUNCIL (ICC) CERTIFICATION	
ICC-SWSI	Structural Steel and Welding Special Inspector

REFERENCES

CODE/STANDARD	TITLE
AISC 360-10	Specification for Structural Steel Buildings
ASTM A6-14	Specification for General Requirements for Rolled Steel Plates, Shapes, Sheet Piling, and Bars for Structural Use.
ASTM A568-14	Specification for Steel Sheet, Carbon and High-Strength, Low-Alloy, Hot-Rolled and Cold Rolled, General Requirements For
AWS D1.1-2010	Structural Welding Code – Steel.
APPLICABLE BUILDING CODE	International Building Code 2015 with Connecticut Amendments
RCSC-2014	Specification for Structural Joints Using High Strength Bolts

STRUCTURAL STEEL-IBC 2015 SECTION 1705.2, AISC 360-10 PART 16, CHAPTER N

ITEM	AGENCY	INSPECTION FREQUENCY	SCOPE
FABRICATOR CERTIFICATION / QUALITY CONTROL PROCEDURES	AWS/AISC-SSI/ICC-SWSI	PERIODIC	Inspect fabrication and fabricated steel during two separate plant visits scheduled at beginning of fabrication and at approx. 80% complete, or as directed by the RDP
		PERIODIC	Review plant quality control procedures.
		PERIODIC	Inspect plant storage and handling procedures.
		PERIODIC	Confirm that approved submittals are in the plant and are being used for fabrication.
		PERIODIC	Inspect plant storage and handling procedures.
		PERIODIC	Confirm that approved submittals are in the plant and are being used for fabrication.
		PERIODIC	Review prequalification test report for the shop coat of paint applied to slip critical connections to comply with Class A or B per RCSC Specification as required.
		NOTE: The foregoing certification requirements will be waived if the structural steel fabricator is certified by the American Institute of Steel Construction's Quality Certification Program for Structural Steel Fabricators and the fabricator submits evidence of this certification.	
MATERIAL CERTIFICATION	AWS/AISC-SSI/ICC-SWSI	PERIODIC	Review mill test reports, certificates, and identification markings of all structural steel, bolts, nuts, and washers for compliance with the ASTM Specifications required by the Contract Documents and by AISC LRFD Specification Section A3.
		PERIODIC	Inspect certificates of weld filler material for compliance with the AWS Specifications required by the Contract Documents and by AISC LRFD Specification Section A3.
BOLTING	AWS/AISC-SSI/ICC-SWSI	PERIODIC	Prior to releasing containers of fastener assembly components for incorporation into the work, verify bolt, nut, and washer diameters and material grades for compliance with the Contract Documents requirements.
		PERIODIC	Inspect a random sample of at least 25% of all bolts in bearing-type, snug-tightened connections. Verify that the plies of the connection are in firm contact.
		AS NOTED	Observe and report the method used to achieve bolt tension. Inspect a random sample of at least 25% of all bolts in pretensioned connections. All inspections shall be made per the RCSC Specification. The required quantities of bolts to be inspected may be modified at the discretion of the SER. Inspection of pretensioning using twist-off-type bolts or turn-of-the-nut method with match-marking shall be periodic. Inspection of pretensioning using the calibrated wrench method or turn-of-the-nut method without match marking shall be continuous.
		PERIODIC	For bolts to be pretensioned, prior to the start of work field test no fewer than three complete fastener assemblies of each combination of diameter, length, grade, and lot with a tension calibrator. Testing shall follow the procedure to be used in the work. Verify that the pretensioning method develops a pretension that is equal to or greater than 1.05 times the pretension specified in Table 8.1 of the RCSC bolt specification. The number of tests required may be increased at the discretion of the SER or inspector.
		CONTINUOUS	Inspect wrench calibration procedures on daily basis (if applicable).
WELDING	AWS-CWI/ASNT	PERIODIC	Perform weld inspections and tests per Chapter 6 of AWS D1.1.
		PERIODIC	Perform visual inspections of all welds for conformance with the contract documents and erection drawings with the applicable visual inspection requirements of AWS D1.1. Verify size and length of fillet welds. Inspect pre-heat, post-heat and surface preparation between passes. Review with SER scope of visual inspection as work progresses.
		FREQUENCY OF TESTING BY ULTRASONIC OR MAGNETIC PARTICLE TESTING METHODS OF OTHER WELDS AS FOLLOWS:	
		PERIODIC	5% of partial penetration groove welds
		CONTINUOUS	10% of all other welds including deck and floor plate welds
		CONTINUOUS	100% of all complete joint penetration walls, multi-pass fillet welds, and single-pass fillet welds greater than 5/16 in.
		CONTINUOUS	100% of all remade welds
		TBD	Additional inspection as determined by inspector and/or SER if defects are revealed
BASE-PLATE GROUTING AND ANCHOR RODS	AWS/AISC-SSI/ICC-SWSI	PERIODIC	Observe grouting operations to verify that grout is of flowable consistency and is consolidated beneath column base plates without air voids
		PERIODIC	Test column base plate non-shrink grout cubes restrained from all sides per ASTM C109, and for shrinkage/ expansion properties per ASTM C1090. Prepare and test three cubes per day during grouting operations. Observe and report the quantity of mixing water; the temperatures of the mixing water, grout, and substrate; preparation of the substrate; and curing method.
STRUCTURAL FRAMING, DETAILS AND ASSEMBLIES	AWS/AISC-SSI/ICC-SWSI	PERIODIC	Inspect member sizes, milled surfaces, and installation and connection details for compliance with approved shop drawings and with Contract Documents.
		PERIODIC	Verify columns are plumb within AISC tolerances.
		PERIODIC	Verify columns and beams have correct piece marks and located and oriented per appropriate drawings.

CERTIFICATION:

STATUS: Bid Set

CONSULTANT:

SIMPSON GUMPERTZ & HEGER
Engineering of Structures and Building Enclosures
Simpson Gumpertz & Heger Inc. 781.907.9000
41 Seyon Street, Building 1, Suite 500 fax 781.907.9009
Waltham, Massachusetts 02453 www.sgh.com

REVISIONS:

MARK	DATE	DESCRIPTION

UNIVERSITY OF CONNECTICUT
UNIVERSITY PLANNING, DESIGN, AND CONSTRUCTION
31 LEDOYT ROAD UNIT 3038
STORRS, CONNECTICUT 06269-3038
TELEPHONE: (860) 486-3127
FACSIMILE: (860) 486-5177

PROJECT:
Academic Building
Roof Replacement
Avery Point Campus
1084 Shennecossett Road
Groton, CT 06340

PROJECT NO: 170710.01
WORK ORDER NO:
FILE NAME:

AUTHOR: RES
DRAFTER: GAT
SCALE:
PRINT DATE: 23 Jan. 2019

SHEET TITLE:
STRUCTURAL GENERAL NOTES

SHEET:
S0.0

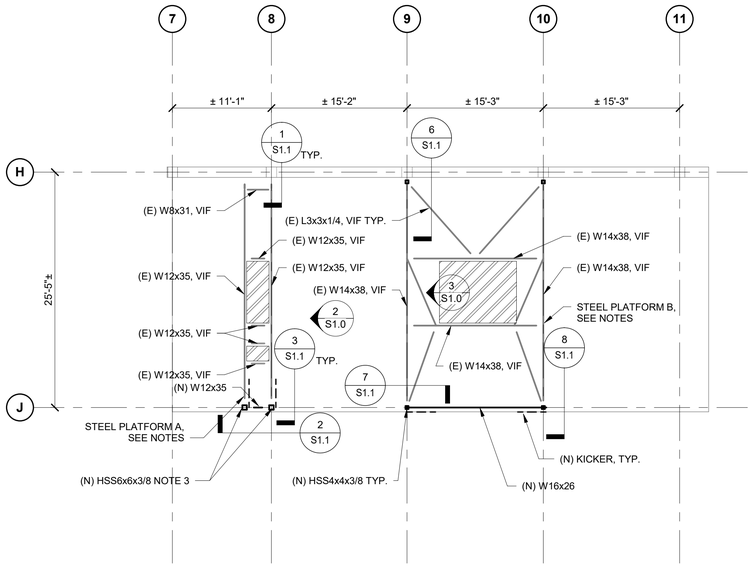

NOTES:
1. EQUIPMENT LOADING (OPERATING WEIGHT ASSUMED FOR SEISMIC CALCULATIONS):
   - PLATFORM A : 3000 LB
   - PLATFORM B : 4000 LB
2. DESIGN IS BASED ON EXISTING EQUIPMENT TO REMAIN IN PLACE. NOTIFY ENGINEER IF EQUIPMENT IS HEAVIER THAN ASSUMED VALUES.
3. HSS POST TO MATCH (E) POST SIZE. VIF (E) POST SIZE AND BASE PLATE CONFIGURATION BEFORE FABRICATION.

1 PARTIAL ROOF-TOP MECHANICAL PLATFORM PLAN

1/8" = 1'-0"

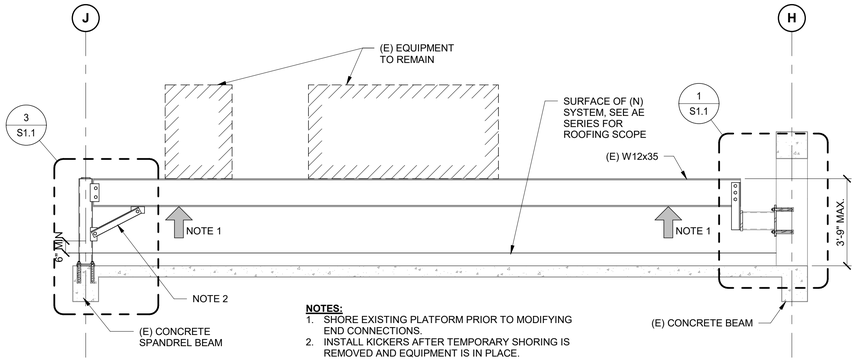

NOTES:
1. SHORE EXISTING PLATFORM PRIOR TO MODIFYING END CONNECTIONS.
2. INSTALL KICKERS AFTER TEMPORARY SHORING IS REMOVED AND EQUIPMENT IS IN PLACE.

2 ELEVATION - PLATFORM A

3/8" = 1'-0"

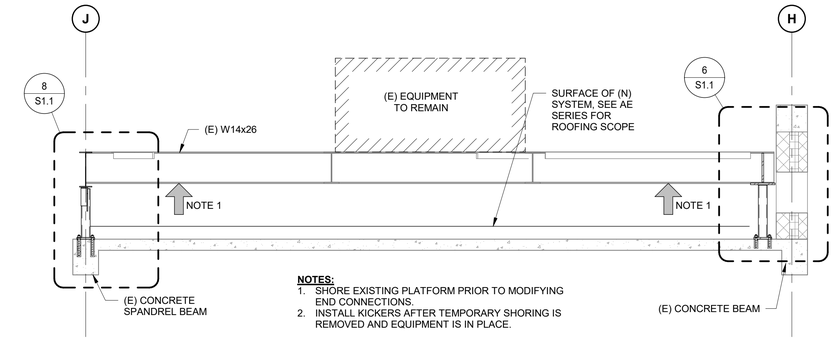

NOTES:
1. SHORE EXISTING PLATFORM PRIOR TO MODIFYING END CONNECTIONS.
2. INSTALL KICKERS AFTER TEMPORARY SHORING IS REMOVED AND EQUIPMENT IS IN PLACE.

3 ELEVATION - PLATFORM B

3/8" = 1'-0"

CERTIFICATION:

STATUS:
Bid Set

CONSULTANT:

SIMPSON GUMPERTZ & HEGER
Engineering of Structures and Building Enclosures
Simpson Gumpertz & Heger Inc.
41 Seyon Street, Building 1, Suite 500
Waltham, Massachusetts 02453
781.907.9000
fax: 781.907.9009
www.sgh.com

REVISIONS:

MARK	DATE	DESCRIPTION

UNIVERSITY OF CONNECTICUT
UNIVERSITY PLANNING, DESIGN, AND CONSTRUCTION
31 LEDOYT ROAD UNIT 3038
STORRS, CONNECTICUT 06269-3038
TELEPHONE: (860) 486-3127
FACSIMILE: (860) 486-5177

PROJECT:
Academic Building Roof Replacement
Avery Point Campus
1084 Shennecossett Road
Groton, CT 06340

PROJECT NO: 170710.01
WORK ORDER NO:
FILE NAME:

AUTHOR: RES
DRAFTER: GAT
SCALE: As indicated
PRINT DATE: 23 Jan. 2019

SHEET TITLE:
ROOFTOP PLATFORM FRAMING PLAN AND ELEVATIONS

SHEET:
S1.0

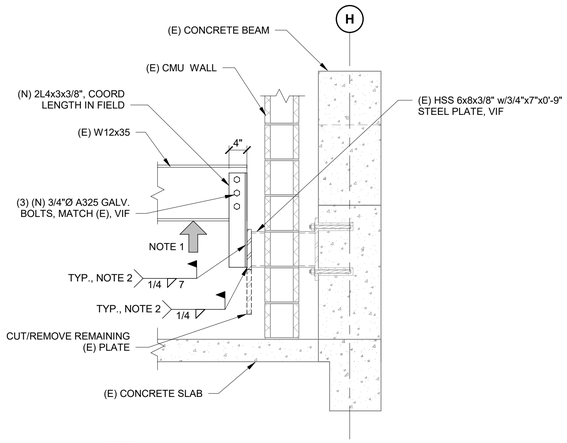

NOTES:
1. SHORE EXISTING PLATFORM PRIOR TO MODIFYING SUPPORTS.
2. TOUCH UP FIELD WELD WITH ZINC RICH PAINT.

1 PLATFORM A CONNECTION AT EXISTING CONCRETE BEAM

3/4" = 1'-0"

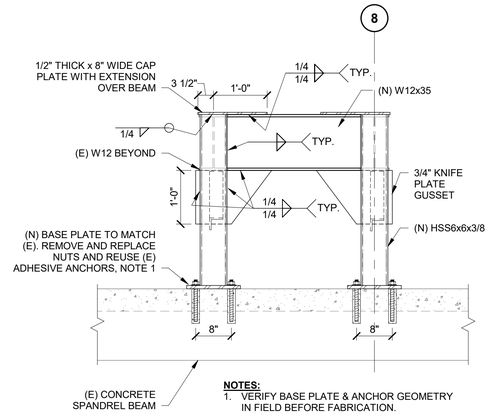

NOTES:
1. VERIFY BASE PLATE & ANCHOR GEOMETRY IN FIELD BEFORE FABRICATION.

2 PLATFORM A PARTIAL MOMENT FRAME ELEVATION ALONG GRID J

3/4" = 1'-0"

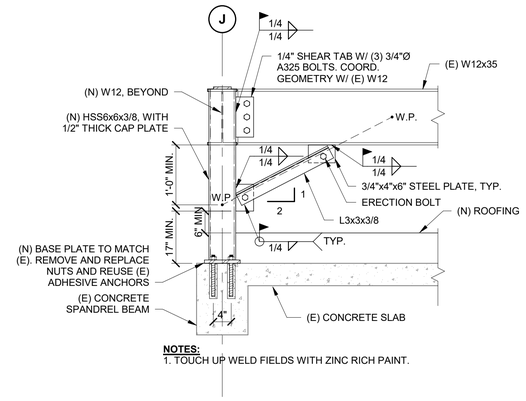

NOTES:
1. TOUCH UP WELD FIELDS WITH ZINC RICH PAINT.

3 PLATFORM A PARTIAL MOMENT FRAME ELEVATION ALONG GRID J

3/4" = 1'-0"

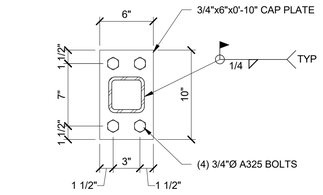

4 TYP CAP PLATE

1 1/2" = 1'-0"

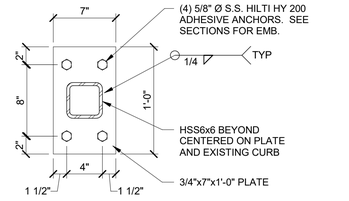

5 TYPICAL NEW BASE PLATE

1 1/2" = 1'-0"

NOTES:
1.NOTES: (E) CMU VENEER NOT SHOWN FOR CLARITY.

6 PLATFORM B CONNECTION AT EXISTING CONCRETE COLUMN

3/4" = 1'-0"

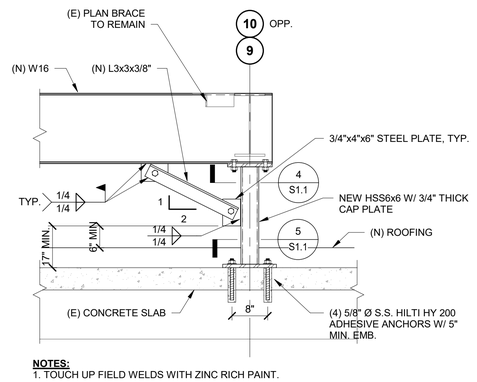

NOTES:
1. TOUCH UP FIELD WELDS WITH ZINC RICH PAINT.

7 PLATFORM B PARTIAL BRACED FRAME ELEVATION ALONG GRID J

3/4" = 1'-0"

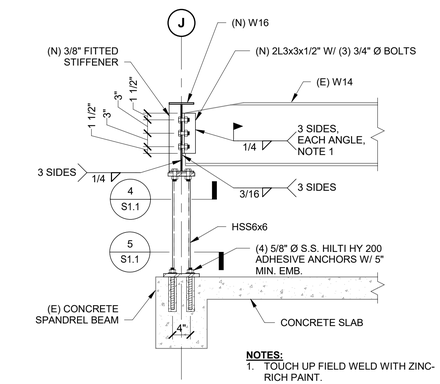

NOTES:
1. TOUCH UP FIELD WELD WITH ZINC-RICH PAINT.

8 PLATFORM B CONNECTION OF (E) BEAM TO (N) BRACED FRAME

3/4" = 1'-0"

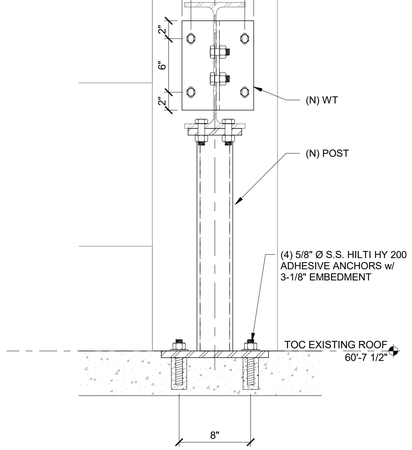

9 SECTION PLATFORM B AT EXISTING CONCRETE COLUMN

1 1/2" = 1'-0"

CERTIFICATION:

STATUS: Bid Set

CONSULTANT:

SIMPSON GUMPERTZ & HEGER
Engineering of Structures and Building Enclosures
Simpson Gumpertz & Heger Inc.
41 Seyon Street, Building 1, Suite 500
Waltham, Massachusetts 02453
781.907.9000
fax: 781.907.9009
www.sgh.com

REVISIONS:

MARK	DATE	DESCRIPTION

UNIVERSITY OF CONNECTICUT
UNIVERSITY PLANNING, DESIGN, AND CONSTRUCTION
31 LEDOYT ROAD UNIT 3038
STORRS, CONNECTICUT 06269-3038
TELEPHONE: (860) 486-3127
FACSIMILE: (860) 486-5177

PROJECT:

Academic Building Roof Replacement

Avery Point Campus
1084 Shennecossett Road
Groton, CT 06340

PROJECT NO: 170710.01
WORK ORDER NO:
FILE NAME:

AUTHOR: RES
DRAFTER: GAT
SCALE: As indicated
PRINT DATE: 23 Jan. 2019

SHEET TITLE:

SECTIONS

SHEET:

S1.1

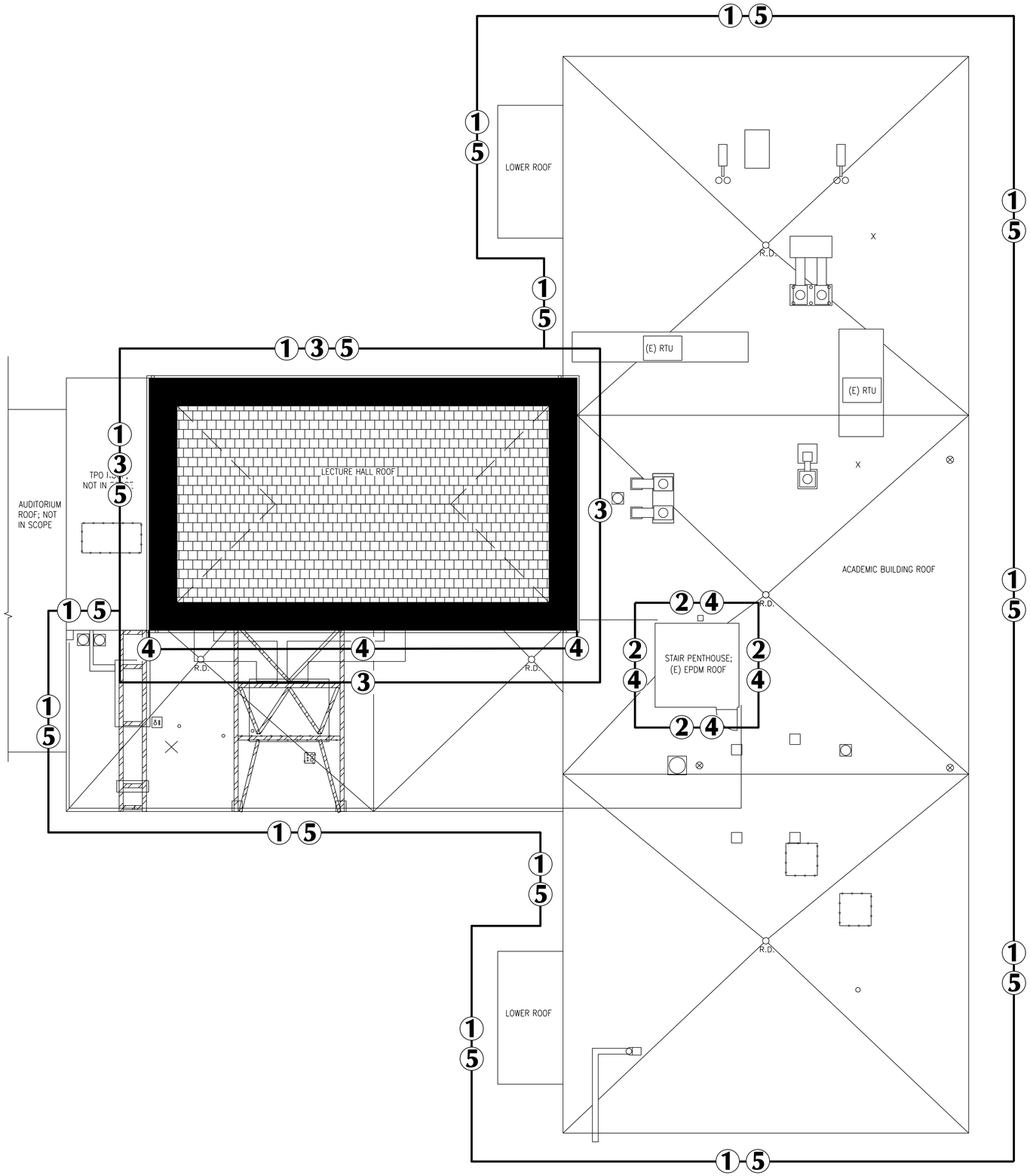

GENERAL NOTES:

1. THE HAZARDOUS MATERIALS ABATEMENT/ROOFING CONTRACTOR(S) IS/ARE RESPONSIBLE FOR THE VERIFICATION OF ALL EXISTING CONDITIONS AND FOR NOTIFYING THE CONSULTANT OF ANY DISCREPANCIES PRIOR TO FINALIZING BID.
2. THE HAZARDOUS MATERIALS ABATEMENT/ROOFING CONTRACTOR(S) IS/ARE RESPONSIBLE FOR REMOVING ALL LAYERS OF ROOFING MATERIALS AND DISPOSING OF AS ASBESTOS CONTAINING MATERIALS. THE HAZARDOUS MATERIALS ABATEMENT/ROOFING CONTRACTOR(S) MUST PERFORM ENOUGH DEMOLITION TO ACCESS ALL ASBESTOS CONTAINING MATERIALS TO BE REMOVED FOLLOWING THE SCOPE WORK.
3. THE HAZARDOUS MATERIALS ABATEMENT/ROOFING CONTRACTOR(S) IS/ARE RESPONSIBLE FOR MULTIPLE MOBILIZATIONS. THE HAZARDOUS MATERIALS ABATEMENT/CONTRACTOR(S) IS/ARE RESPONSIBLE FOR COORDINATING ABATEMENT WORK WITH THE GENERAL AND DEMOLITION CONTRACTORS, CONSTRUCTION MANAGER, BUILDING OWNER, ARCHITECTS, ENGINEERS AND CONSULTANTS.
4. THE HAZARDOUS MATERIALS ABATEMENT/ROOFING CONTRACTOR(S) IS/ARE RESPONSIBLE FOR CLEANING/DECONTAMINATING/ABATING THE INTERIORS OF THE BUILDING SHOULD THE REMOVAL/ABATEMENT TECHNIQUES RESULT IN ASBESTOS CONTAINING MATERIALS/WASTE ENTERING THE BUILDING. THE WORK WILL INCLUDE PRE-CLEANING AREAS, MOVEABLE AND NONMOVEABLE OBJECTS, CONSTRUCTING CONTAINMENTS, ETC. THE OWNER'S CONSULTANT WILL PERFORM VISUAL INSPECTIONS AND RE-OCCUPANCY AIR TESTING. THE HAZARDOUS MATERIALS ABATEMENT/ROOFING CONTRACTOR(S) WORK WILL ALL BE PERFORMED AT NO ADDITIONAL COST TO THE OWNER.

HAZARDOUS MATERIALS ABATEMENT NOTES:

1. THE HAZARDOUS MATERIALS ABATEMENT/ROOFING CONTRACTORS SHALL REMOVE AND DISPOSE OF ALL ASBESTOS CONTAINING PERIMETER/PENETRATION/WALL/MECHANICAL EQUIPMENT/MAIN ROOFING AREAS WITH ELEVATION HEIGHT CHANGES ROOF FLASHING (ALL LAYERS/MATERIALS CONTAMINATED SUBSTRATES) AS ACM (METAL FLASHING CAN BE RECYCLED OR DISPOSED OF AS HAZARDOUS LEAD CONTAINING WASTE).
2. THE HAZARDOUS MATERIALS ABATEMENT/ROOFING CONTRACTORS SHALL REMOVE AND DISPOSE OF ALL ASBESTOS CONTAINING BOTTOM LAYER ROOF DECK TAR (INCLUDING CONTAMINATED SUBSTRATES) AS ACM.
3. THE HAZARDOUS MATERIALS ABATEMENT/ROOFING CONTRACTORS SHALL REMOVE AND DISPOSE OF ALL ASBESTOS CONTAINING ROOF GUTTER FLASHING ON GUTTERS AND ADJACENT SURFACES AS ACM.
4. THE HAZARDOUS MATERIALS ABATEMENT/ROOFING CONTRACTORS SHALL REMOVE AND DISPOSE OF ALL WINDOW/WALL SYSTEM CAULKING, GLAZING, SEALANT COMPOUND AND WOOD WALL PAINT AS ACM AND ASSUMED PCB >50 PPM BULK PRODUCT WASTE. THE CONTRACTOR SHOULD ASSUME PAINTED WOOD WASTE WILL CONTAIN LEAD-BASED PAINT AND PRICING SHALL INCLUDE DISPOSAL AS LEAD HAZARDOUS WASTE UNLESS TCLP SAMPLING PROVES OTHERWISE AND THEN A CREDIT WILL BE ISSUED TO THE OWNER FOR DISPOSAL AS NON-LEAD-HAZARDOUS WASTE.
5. THE HAZARDOUS MATERIALS ABATEMENT/ROOFING CONTRACTORS SHALL REMOVE AND DISPOSE OF ALL ROOF CAULKING COMPOUNDS AS ACM AND ASSUMED PCB >50 PPM BULK PRODUCT WASTE. THE CONTRACTOR SHOULD ASSUME PAINTED WOOD WASTE WILL CONTAIN LEAD-BASED PAINT AND PRICING SHALL INCLUDE DISPOSAL AS LEAD HAZARDOUS WASTE UNLESS TCLP SAMPLING PROVES OTHERWISE AND THEN A CREDIT WILL BE ISSUED TO THE OWNER FOR DISPOSAL AS NON-LEAD-HAZARDOUS WASTE.

CERTIFICATION:

STATUS:
Bid Set

CONSULTANT:

LANGAN

REVISIONS:

MARK	DATE	DESCRIPTION

UNIVERSITY OF CONNECTICUT
UNIVERSITY PLANNING, DESIGN, AND CONSTRUCTION
31 LEDOYT ROAD UNIT 3038
STORRS, CONNECTICUT 06269-3038
TELEPHONE: (860) 486-3127
FACSIMILE: (860) 486-3177

PROJECT:
Academic Building
Roof Replacement
Avery Point Campus
1084 Shennecossett Road
Groton, CT 06340

PROJECT NO: 300098
WORK ORDER NO:
FILE NAME:

CHECKED BY: MM
DRAFTER: HHG
SCALE: Not To Scale
PRINT DATE: 23 Jan. 2019
SHEET TITLE:
Hazardous Building Materials Abatement Plan

SHEET:
HBM-01

SHEET: 13 of 13.

Filename: I:\BOZ\Projects\2017\170710.01-ACDM\Drawings\Working_Set\HMB-01 Hazardous Building Materials Abatment Plan.dwg Date: 1/23/2019 Time: 12:05 User: crwhite Style Table: _2005-SGH-FS.ctb Layout: ARCHD-BL

UCONN | UNIVERSITY OF CONNECTICUT

Capital Projects and Contract Administration
Planning, Architectural and Engineering Services

HOURLY LABOR RATE WORKSHEET

This worksheet is to be completed by the contractor or the subcontractor to calculate the hourly labor rate to be included in the contract documents for change order work (refer to 'Change Orders' in contract General Conditions for further information). All fields highlighted in pale yellow require completion, and fields highlighted in pale blue will automatically populate. Refer to tab "Instructions" for additional guidance on how to complete the form.

PROJECT NAME:		**PROJECT NO.:**	
CONTRACTOR / SUBCONTRACTOR:		**DATE:**	
TRADE:		**CLASSIFICATION:**	

Item	Benefit Paid Cash	Benefit Provided	Percent Rate	Wage Rate Calculation: Regular Time	Overtime	Double Time	Notes
	(put X in appropriate box)						
Base Labor Rate					$ -	$ -	*Use certified payroll to verify, if applicable*
Fringe Benefits: [1]							
Medical / Health [1]					-	-	
Pension / Ret [1]					-	-	
Life Insurance [1]					-	-	
Disability [1]					-	-	
Vacation/Holiday [1]					-	-	
Union Fund Costs [1]					-	-	
OT Fringe Cost [1]							
Fringe Benefits Subtotal				$ -	$ -	$ -	
Total Wage Hourly Rate				$ -	$ -	$ -	*= Base Labor Rate + Fringe Benefit Subtotal*
Benefits Paid Cash				$ -	$ -	$ -	
Total Cash Hourly Rate				$ -	$ -	$ -	*= Base Labor Rate + Benefits Paid Cash*
Burden: Taxes & Insurance [2]							
Social Security			6.20%	-	-	-	*Rate verified annually*
Medicare			1.45%	-	-	-	*Rate verified annually*
Federal Unemployment (FUTA) [3]				-	-	-	*See Instructions for Sample Calculation*
State Unemployment (SUTA) [3]				-	-	-	*See Instructions for Sample Calculation*
Workers Compensation [3]				-	-	-	*See Instructions for Sample Calculation*
Burden Subtotal				$ -	$ -	$ -	
Other (GL insurance, travel, safety, indirect labor, small tools, parking, training, non-hourly union expense, etc.)				N/A	N/A	N/A	*Included in OH&P per AIA 201*
TOTAL HOURLY RATE (Total Hourly Rate + Burden):				$ -	$ -	$ -	

Note: For change order work, mark-ups for overhead and profit shall be applied to the Total Hourly Rate above in accordance with the provisions within AIA 201 General Conditions, under 'Change in the Work'. The Total Hourly Rate, including the various components, are subject to audit and may be adjusted, with due process, based on the outcome of these procedures.

[1] Fringe Benefits must be exclusive of overhead and profit, and must be supportable by certified payroll, if applicable. Place an "X" in column "Benefit Paid Cash" if appropriate. Union jobs may have certain allowable costs on an hourly basis in excess of standard employee benefits; utilize "Union Fund Costs" for these instances. On rare occasions, certain unions have increased fringe costs when overtime / double time are incurred; utilize "OT Fringe Cost" to capture these situations; otherwise leave these cells blank.

[2] Tax & Insurance Burden is applied to the Total Cash Hourly Rate, which includes Base Labor Rate plus Benefits Paid Cash. Refer to instructions for additional information and assistance with completing this section.

[3] SUTA, FUTA & WCI rates which received an adjustment within the instruction page require justification; the adjustment and justification are reiterated below:

Adjustment to Rate: **SUTA 0.00%** **FUTA 0.00%** **WCI -**

By signing below, the submitter certifies and declares under penalty of perjury under the laws of the State of Connecticut that the foregoing is true and correct.

Rates certified by: _____ (print name) Company Name: _____

Signature: _____

HOURLY LABOR RATE WORKSHEET INSTRUCTIONS

UCONN | UNIVERSITY OF CONNECTICUT

Capital Projects and Contract Administration
Planning, Architectural and Engineering Services

The following instructions provide guidance and assistance in completing the Hourly Labor Rate Worksheet (HLRW). Where practical, additional instruction and drop-down lists have been included in the HLRW in specific fields. Data should be entered into all fields highlighted in pale yellow; all fields highlighted in pale blue will automatically populate and are locked for editing. Required fields in these instructions are indicated by "**" and are highlighted in pale red. Once accepted by the University, the resulting Total Hourly Rates at the bottom of the HLRW are the labor rates that should be used on all change order requests when labor hours are broken out.

These instructions contain sample calculations to assist in the determination of acceptable rates for FUTA, SUTA and Workers' Compensation Insurance (WCI). These calculations are *not* to be submitted with the HLRW, and the HLRW is *not* linked to the rate determined by the sample calculation; however a brief rationale to document a departure from the sample calculation is required within the relevant section below (refer to pale red fields). The rationale and the amount of departure from the sample calculation *is* included on the HLRW via electronic linking, and is attested to by the signor.

General Information Section:
Complete the basic information requested, noting the following: a) the form may be completed by the contractor or sub-contractor, if applicable; however the company and individual signing the document are responsible for the content provided, including errors and / or omissions; b) the trade selected should agree with the contractor's workers' compensation policy; c) if multiple worker classifications are applicable to this project, select the classification that best describes the labor rate from the options provided and prepare additional rate sheets for the other classifications. General Foreman classification is intentionally excluded from the listing as this management position is included within overhead and profit.

Wage Rate Calculation Section: Comprised of Base Labor Rate, Fringe Benefits and Burden on these costs. Refer to the following sections for further detail.

Base Labor Rate: This rate **should agree with the certified payroll**, if applicable, and is often the prevailing wage or union wage rate. For non-rate / non-union projects, the rate must be a reasonable blend of the workers performing the trade work.

Fringe Benefits: The total of the Fringe Benefit column should match the total of the fringe benefits from the prevailing wage or union wage agreements, **should agree with certified payroll**, and often can come directly from the Collective Bargaining Agreement, if applicable. The categories listed in the HLRW detail the various types of benefits and are consistent with the certified payroll form; however the fringe category 'other' is narrowly defined on the HLRW as certain hourly union related costs. This line would include amounts that, combined with the other fringe categories, comprise the total package for the union agreement. Other costs commonly identified as 'other', such as training and/or safety, are components of overhead and profit, and are excluded from the hourly labor rate.

Burden: Burden includes Taxes and Workers' Compensation Insurance (WCI).

Taxes: Taxes are comprised of FICA, SUTA and FUTA (described in greater detail below). The employer portion of FICA taxes (combination of Social Security and Medicare taxes) are hardcoded into the form and contractors are reimbursed 100% for this tax burden. The rates for SUTA and FUTA are to be entered by the contractor utilizing the following information / calculation:

SUTA (a.k.a. State Unemployment Tax): Paid by the employer; imposed on the first $15K of annual earnings only, at a variable rate determined by the Department of Labor for each employer.

FUTA (a.k.a. Federal Unemployment Tax): Paid by the employer; imposed on the first $7K of annual earnings only, at a constant rate for all employers nationally, plus a potential incremental rate linked to State borrowings from the Federal Unemployment Fund (a.k.a. Credit Reduction).

The calculations below are based on an averaging methodology, which is an allowable technique to determine an appropriate tax rate for the burden of SUTA and FUTA taxes. Due to the timing of the tax burden, where the majority of the cost is typically incurred in the first quarter of a calendar year, and special SUTA assessments, which are periodically issued from the Department of Labor, an adjustment field has been included to tailor the average rate to the specific needs of the contractor. Any adjustments must be supportable and the total tax rate can not exceed the statutory maximum rate. All adjustments require a rationale to be provided on these instructions, and the adjustment and the rationale are included on the HLRW automatically, which are being attested to by the signor. For convenience, the most common rationales can be selected from a drop down list. The Total Rate for both SUTA and FUTA will need to be populated in the appropriate cell in the HLRW - the HLRW will not automatically update based on the calculations below.

	SUTA		FUTA	
Total Payroll:			-	
Tax Paid:				
Average Rate:	0.00%		0.00%	
Adjustment to Rate:**				
Total Rate:	0.00%	Manually populate this rate on HLRW	0.00%	Manually populate this rate on HLRW
Rationale for Adjustment:**				

Workers' Compensation Insurance: WCI is based upon several factors, and is primarily composed of the Trade Rate, based on the type of work the Contractor performs, and the firm's Experience Modification Rating (EMR), which is based on the Contractor's specific claim history. The Trade Rate is statutorily mandated and can be derived directly from the WCI policy premium calculation provided by the insurance company. To reward Contractors with a low EMR or that have earned other discounts on their WCI policy, the Trade Rate used on the HLRW will not be adjusted lower than the rate incurred by the Contractor, which would effectively reduce the labor rate for these earned discounts. However, to properly compensate Contractors that incur additional WCI premiums for higher EMR's, or pay other adjustments to their premiums, an adjustment field has been provided to capture these increases in WCI cost. *This adjustment field should only be used if the net of all adjustments to the policy premium results in higher premium charges.* Once the combined WCI rate has been determined, populate the appropriate cell in the HLRW - the HLRW will not automatically update based on the calculations below.

WCI Trade Rate:			
Adjustment to Rate:**		**Rationale for Adiustment**:**	
Combined WCI Rate:	0.00%	Manually populate this rate on HLRW	