UCONN
UNIVERSITY OF CONNECTICUT

BID CLARIFICATION #2
November 30, 2018

DUE DATE: December 11, 2018
TIME: 2:00 p.m.
PROJECT: Whitney Dining Hall Renovations
Project Number: 201687
LOCATION: University of Connecticut
Capital Projects & Contract Administration
3 Discovery Drive
Storrs, CT 06269
Attn: Walt Dalia

Please note the following information must be incorporated into your proposal for the Whitney Dining Hall Renovations, Project #201687:

1) **Attached is Addendum #1 from EDM**
2) **Attached is a revised Unit Price Sheet and Schedule of Values. Please replace the ones in the Bid Submission with these.**
3) **Attached is the RFI Response Log dated 11/30/18**
4) **Attached is a revised Page 9 of the Instructions to Bidders confirming the Liquidated Damages of $5,000 per day**

End of Bid Clarification #2

Addendum No. 01
To
The Contract Documents For
The Construction Of

Whitney Dining Hall Renovations
University of Connecticut
Storrs, CT

Project No. unc-4491 (UConn #201687)
11.30.18

This Addendum forms a part of the Contract Documents and modifies the original Bidding Documents dated 11.02.18 as noted below. Acknowledge receipt of this Addendum in the space provided on the Bid Form. Failure to do so may subject the Bidder to disqualification.

This Addendum is comprised of Page Nos. 1 through 4, and the following attachments:

Previously issued revised Drawings:

A-101	**FLOOR PLAN**
A-503	**INTERIOR ELEVATIONS**
A-512	**MILLWORK DETAILS**
A-901	**MISCELLANEOUS DETAILS**
K2.1	**FOODSERVICE EQUIPMENT LAYOUT**
K4.2	**FOODSERVICE MILLWORK DRAWINGS**
K4.3	**FOODSERVICE MILLWORK DRAWINGS**
K4.4	**FOODSERVICE MILLWORK DRAWINGS**
K4.5	**FOODSERVICE MILLWORK DRAWINGS**
K4.6	**FOODSERVICE MILLWORK DRAWINGS**
M-111	**FIRST FLOOR HVAC PLAN**
M-112	**FIRST FLOOR HVAC PIPING PLAN**
M-121	**ROOF HVAC PLAN**
M-302	**MECHANICAL SCHEDULES**
EL-101	**FIRST FLOOR ELECTRICAL LIGHTING PLAN**
EP-101	**FIRST FLOOR POWER PLAN**
E-501	**ELECTRICAL SCHEDULES**

PD-101 **PLUMBING DEMO PLAN**

P-101 **PLUMBING BASEMENT PLAN**

P-111 **PLUMBING FIRST FLOOR PLAN**

P-201 **PLUMBING DETAILS AND SCHEDULES**

New Drawings:

AD-201 **DEMO CEILING PLAN**

Previously issued revised Specifications:

114000 **FOODSERVICE EQUIPMENT**

211313 **WET-PIPE SPRINKLER SYSTEMS**

New Specification Sections:

ASBESTOS SURVEY

Sketch Drawings:

N/A

DRAWINGS

1. AD-101 DEMO FLOOR PLAN

   A. **ADD** general note #02 to read as follows, **"PROVIDE TEMPORARY SHORING AS REQUIRED FOR ALL REQUIRED DEMOLITION TO STRUCTURAL ELEMENTS."**

2. A-102 FINISH PLAN

   A. **ADD** the following note in Entry 109 to read as follows, **"AT EACH NEW STAIR METAL TREAD, PROVIDE ¼" THICK EXTERIOR PLYWOOD SHIM UNDER EACH NEW TREAD (TYP 4)."**

   B. **ADD** the following note in Entry 109 to read as follows, **"AT THE TOP OF EACH STEP GOING DOWN TO THE LOWER LEVEL, REMOVE THE TOP METAL STAIR TREAD, INSTALL ¼" EXTERIOR GRADE PLYWOOD SHIM AT THE TREAD AND REINSTALL METAL STAIR TREAD (TYP 2)."**

3. K1.1 UTILITY SCHEDULE

   A. **ADD** the following to the comment section for item #04: **"THIS UNIT IS TO INCLUDE AN OUTER SHELL ACCESSORY PACK THAT IS POWDER COATED BLACK. THE ACCESSORY PACK IS TO BE FACTORY INSTALLED."**

SPECIFICATIONS

1. TABLE OF CONTENTS

   A. Please **DELETE** section 085400 FIBERGLASS WINDOWS from the table of contents.

2. 012100 ALLOWANCES

   A. Please **ADD** section 3.3G to read as follows: **"ALLOWANCE NO. 7: VALUE-COST ALLOWANCE: INCLUDE THE SUM OF $3,000 FOR THE REPAIR OF THE EXISTING MAIN ENTRY DOOR, AS NOTED IN ALTERNATE #03."**

3. 012200 UNIT PRICES

   A. Please **ADD** section 3.1E to read as follows:

      E. UNIT PRICE NO. 5 – EXISTING TERRAZZO CRACK REPAIR:
      1. DESCRIPTION: REPAIR EXISTING CRACKS IN TERRAZZO FLOORING. REPAIR CRACKS AS SPECIFIED IN SECTION 094300 TERRAZZO REPAIR.
      2. UNIT OF MEASUREMENT: LINEAR FOOT OF CRACKS.

4. 080314 RESTORATION OF WOOD DOORS

   A. At paragraph 2.3, **REPLACE** section A3 with the following, **"THRESHOLD: PEMKO 229D SADDLE THRESHOLD, WIDTH AS REQUIRED. CONTRACTOR TO CONFIRM DEPTH OF THRESHOLD REQUIRED PRIOR TO INSTALLATION."**

5. 102800 TOILET ACCESSORIES

   A. IN PART 2 - PRODUCTS, paragraph 2.2G, **DELETE** item 1, 2 and 3 and replace with the following:

      1. FRAME: WOOD FRAME (HW-1). SEE DETAIL ON A-511.

      2. SIZE: SEE DIMENSIONS ON A-503.

6. 123616 METAL MILLWORK

   A. Please **DELETE** this section in its entirety.

7. 230593 TESTING AND BALANCING

   A. Please **ADD** the following paragraph:

      3.11 ADDITIONAL TESTS
      A. TAB contractor will verify select readings in the presence of the Commissioning Agent.

8. 230923 DIRECT DIGITAL CONTROL (DDC) SYSTEM FOR HVAC

   A. Please **ADD** the following paragraph:

      3.9 ADJUSTMENT, CALIBRATION, AND TESTING
      A. COMPLETE INSTALLATION AND STARTUP CHECKS AND FUNCTIONAL TESTS ACCORDING TO SECTION 019113
      B. PROVIDE SYSTEM MONITORING TREND DATA TO CONFIRM SATISFACTORY OPERATION. TREND DATA AND DURATION WILL BE DEFINED BY THE DESIGN TEAM, COMMISSIONING AUTHORITY, CONTROLS CONTRACTOR, AND THE OWNER DURING THE FUNCTIONAL TESTING PROCESS.

9. GENERAL NOTE FOR SPECIFICATION SECTIONS 220517 THROUGH 283111

   A. In PART 1 – GENERAL, please ADD the following paragraph, **"REFER TO SECTION 01 91 13 COMMISSIONING GENERAL REQUIREMENTS FOR ALL COMMISSIONING REQUIREMENTS."**

10. GENERAL NOTE FOR SPECIFICATION SECTIONS 224713 DRINKING FOUNTAINS, 223400 FUEL-FIRED, COMMERCIAL WATER HEATERS, 237200 AIR-TO-AIR ENERGY RECOVERY EQUIPMENT, 237423.13 PACKAGED, DIRECT FIRED, OUTDOOR, HEATING ONLY MAKE UP AIR UNITS, 238129

VARIABLE-REFRIGERANT-FLOW HVAC SYSTEMS, 260923 LIGHTING CONTROL DEVICES AND 260943 RELAY-BASED LIGHTING CONTROLS.

A. In PART 3 - EXECUTION, paragraph 2.2G, **DELETE** item 1, 2 and 3 and replace with the following:

COMMISSIONING

A. VERIFY THAT EQUIPMENT IS INSTALLED AND COMMISSIONED AS PER REQUIREMENTS OF SECTION 019113 AND MANUFACTURER'S WRITTEN INSTRUCTIONS.

B. COMPLETE INSTALLATION AND STARTUP CHECKS AND FUNCTIONAL TESTS ACCORDING TO SECTION 019113 AND MANUFACTURER'S WRITTEN INSTRUCTIONS. FULL SEQUENCE OF OPERATIONS AND INTEGRATION WITH THE BUILDING MANAGEMENT SYSTEM WILL BE VERIFIED AS APPLICABLE.

11. 088000 GLAZING

A. In Part 3, **DELETE** section 3.4A and replace with the following:

A. Double Glazed Tinted Solar Control Insulating Glass Unit [Solarban® 70XL on Optigray® 6mm (2) | Air 1/2" (12.7mm) | Clear 6mm]

1. Conformance: ASTM E 2190

2. Outdoor Lite: Optigray® Tinted Float Glass as manufactured by Vitro Architectural Glass

a. Conformance: ASTM C 1036, Type 1, Class 2, Quality q3.

b. Glass Thickness: 6mm (1/4")

c. Magnetic Sputter Vacuum Deposition Coating (MSVD): ASTM C 1376.

d. Coating: Solarban® 70XL on Surface # 2

e. Heat-Treatment: Heat-strengthened, ASTM C 1048, Kind HS

3. Interspace Content: Air 1/2" (12.7mm)

4. Indoor Lite: Clear float glass as manufactured by Vitro Architectural Glass

a. Conformance: ASTM C 1036, Type 1, Class 1, Quality q3.

b. Heat-Treatment: Heat-strengthened, ASTM C 1048, Kind HS

c. Glass Thickness: 6mm (1/4")

5. Performance Requirements:

a. Visible Light Transmittance: 47 percent minimum.

b. Winter Nighttime U-Factor: 0.28 (Btu/hr*ft^2*°F) maximum.

c. Summer daytime U-Factor: 0.26 (Btu/hr*ft^2*°F) maximum.

d. Shading Coefficient: 0.28 maximum.

e. Solar Heat Gain Coefficient: 0.24 maximum.

f. Outdoor Visible Light Reflectance: 8 percent maximum.

END OF ADDENDUM #01

floor plan - general notes

1. PROVIDE BLOCKING IN WALL AS REQUIRED FOR MOUNTING TV, COORDINATE WITH ARCHITECT IN FIELD.
2. FOR MATERIALS AND FINISHES, REFER TO FINISH SCHEDULE SHEET A-901.

floor plan - key notes

P01 REPLACE EXISTING DUMBWAITER IN KIND. COORDINATE MOUNTING OF CONTROLLER AND DISCONNECT WITH ARCHITECT.
P02 EXPOSED EXISTING BRICK WALL (BRK-1). REPAIR EXISTING BRICK AS REQUIRED FOR EXPOSED LOOK. EXTENT SHOWN AS DASHED, INCLUDING ABOVE OPENINGS.
P03 FOLDING GLASS PANELS. SEE A-501 FOR MORE INFORMATION ON PANELS.
P04 BUILT-IN MILLWORK AT CHECK-IN STATION. SEE DETAIL **1** / **A-511**.
P05 FOOD SERVICE EQUIPMENT. SEE FOOD SERVICE DRAWINGS FOR MORE INFO.
P06 REPLACE EXISTING MOP SINK. PROVIDE 18" FRP SURROUND ON TWO SIDES (AT WALL) OF MOP SINK. SEE PLUMBING DRAWINGS FOR MORE INFORMATION
P07 PAINT EXPOSED STEEL COLUMNS (P-2B).
P08 MANUFACTURED PLANTER. SEE DETAIL **6** / **A-502** .
P09 GAS FIREPLACE INSERT.
P10 BUILT-IN BAR TOP COUNTER WITH BLACK STEEL PIPE FOOT REST BELOW. SEE DETAIL **10** / **A-511**.
P11 BUILT-IN COMMUNITY TABLE WITH LOW WALL BELOW. SEE DETAIL **1** / **A-512**.
P12 BUILT-IN BANQUETTE SEATING WITH FULLY UPHOLSTERED SEAT. SEE DETAIL **2** / **A-511** .
P13 LIVE EDGE WOOD TABLE TOP, AT 36" ABOVE FINISHED FLOOR.
P14 REPAIR EXISTING WINDOW. REMOVE SOLID PANEL IN THE EXISTING SASH AND REPLACE WITH INSULATED GLAZING THAT MATCHES EXISTING. — NOT REQUIRED IF ALTERNATE #01 IS ACCEPTED.
P15 REBUILD CORNER IN BRICK TO MATCH EXISTING BRICK WALL. USE SALVAGED BRICK FROM DEMO.
P16 PROVIDE THIN BRICK ON WALL (BRK-2) TO MATCH EXISTING BRICK WALL.
P17 FLASH PATCH THE EXISTING SLAB TO MATCH FLOOR LEVEL OF MAIN DINING ROOM.
P18 ON NORTH SIDE OF NEW WALL INFILL, PROVIDE CHAIR RAIL AND BASE TO MATCH EXISTING. PAINT WALL (CORNER TO CORNER; WHOLE WALL) TO MATCH EXISTING.
P19 EXISTING WINDOW OPENING. PROVIDE CORNER BEAD AT THE HEAD, THE SILL AND AT BOTH JAMBS, WHERE NEW LAMINATED DRYWALL JOINS THE EXISTING PLASTER RETURN BACK TO WINDOW FRAME. MUD IN CORNER FOR FINISHED APPEARANCE. — NOT REQUIRED IF ALTERNATE #01 IS ACCEPTED.
P20 PROVIDE STAINLESS STEEL PLATE OVER EXISTING TO BE REMOVED PIPE PENETRATION THROUGH THE EXISTING STAINLESS STEEL PASS-THROUGH COUNTER.
P21 REPLACE EXISTING SOAP DISPENSERS AT BOTH SIDES OF THE STAINLESS STEEL PASS THROUGH COUNTER. PROVIDE TORK FOAM SOAP DISPENSER (MODEL #46610) WITH HAND SANITIZER OR ARCHITECT APPROVED EQUAL.
P22 PROVIDE NEW CLASS ABC FIRE EXTINGUISHER IN EXISTING FIRE EXTINGUISHER CABINET.
P23 FIRE EXTINGUISHER CABINET WITH CLASS ABC FIRE EXTINGUISHER.
P24 REMOVABLE STAINLESS STEEL ENCLOSURE FOR SODA LINES. COORDINATE EXACT LOCATION AND SIZE IN FIELD WITH ARCHITECT.
P25 VINYL WALL COVERING WITH CUSTOM GRAPHIC. CONTRACTOR TO SKIM COAT THE EXISTING WALL BEHIND WALL COVERING TO A LEVEL 5 FINISH.
P26 CLASS K FIRE EXTINGUISHER.
P27 (2) 1 1/2" BLACK STEEL PIPES MOUNTED TO SIDE WALLS WITH THREADED PIPE FLANGES. SEE ELEVATION FOR HEIGHTS.
P28 COORDINATE EXACT SIZE OF CHASE.
P29 SQUARE TABLE. SEE DETAIL **5** / **A-512** & **6** / **A-512**.

scope for alternates

ALTERNATE 01: IN THE AREA OF THE ALTERNATE AS NOTED ON THE PLAN, THE FOLLOWING WORK SHALL BE DONE:

- DEMOLITION SCOPE
  1. IN THE DINING ROOM 105:
     A. WALL TYPE 5 IN THE AREA OF THE ALTERNATE WILL NO LONGER BE REQUIRED.
  2. IN THE CAFE 107:
     A. REMOVE EXISTING WOOD TRIM AND WAINSCOTING OFF THE WALL.
     B. WOOD SHUTTER SCOPE FROM BASE BID TO REMAIN PART OF THIS ALTERNATE.
- NEW SCOPE:
  1. IN THE DINING ROOM 105:
     A. INSTALL 2" THERMAL FURRING (ECO-STUD OR ARCHITECT APPROVED EQUAL), 2" RIGID INSULATION AND ONE (1) LAYER OF 5/8" GWB ON INTERIOR OF EXISTING EXTERIOR WALL.
  2. IN THE CAFE 107:
     A. INSTALL 2" THERMAL FURRING (ECO-STUD OR ARCHITECT APPROVED EQUAL), 2" RIGID INSULATION AND ONE (1) LAYER OF 5/8" GWB ON INTERIOR OF EXISTING EXTERIOR WALL.
     B. PROVIDE NEW, PAINTED HARDWOOD TRIM (P-1) OVER GWB TO MATCH PREVIOUS EXISTING LOCATION, PROFILE AND SIZE (REPLACE EXISTING TO BE REMOVED WOOD TRIM IN KIND WHERE NEW INSULATION HAS BEEN INSTALLED). CONTRACTOR TO TAKE INVENTORY OF ALL EXISTING TRIM, DOCUMENT ALL LOCATIONS, PROFILES AND SIZES, AND REPLACE TRIM AND WAINSCOTING IN KIND. PAINT ALL NEW TRIM AND WAINSCOTING (HW-4). WAINSCOTING IS NOT REQUIRED BEHIND BANQUETTE. SEE IMAGES BELOW FOR REFERENCE.
     C. WOOD SHUTTER SCOPE FROM BASE BID TO REMAIN PART OF THIS ALTERNATE.
  3. IN THE PREP AREA 112:
     A. INSTALL 2" THERMAL FURRING (ECO-STUD OR ARCHITECT APPROVED EQUAL), 2" RIGID INSULATION AND ONE (1) LAYER OF 5/8" GWB ON INTERIOR OF EXISTING EXTERIOR WALL.

PHOTOS IN CAFE 107

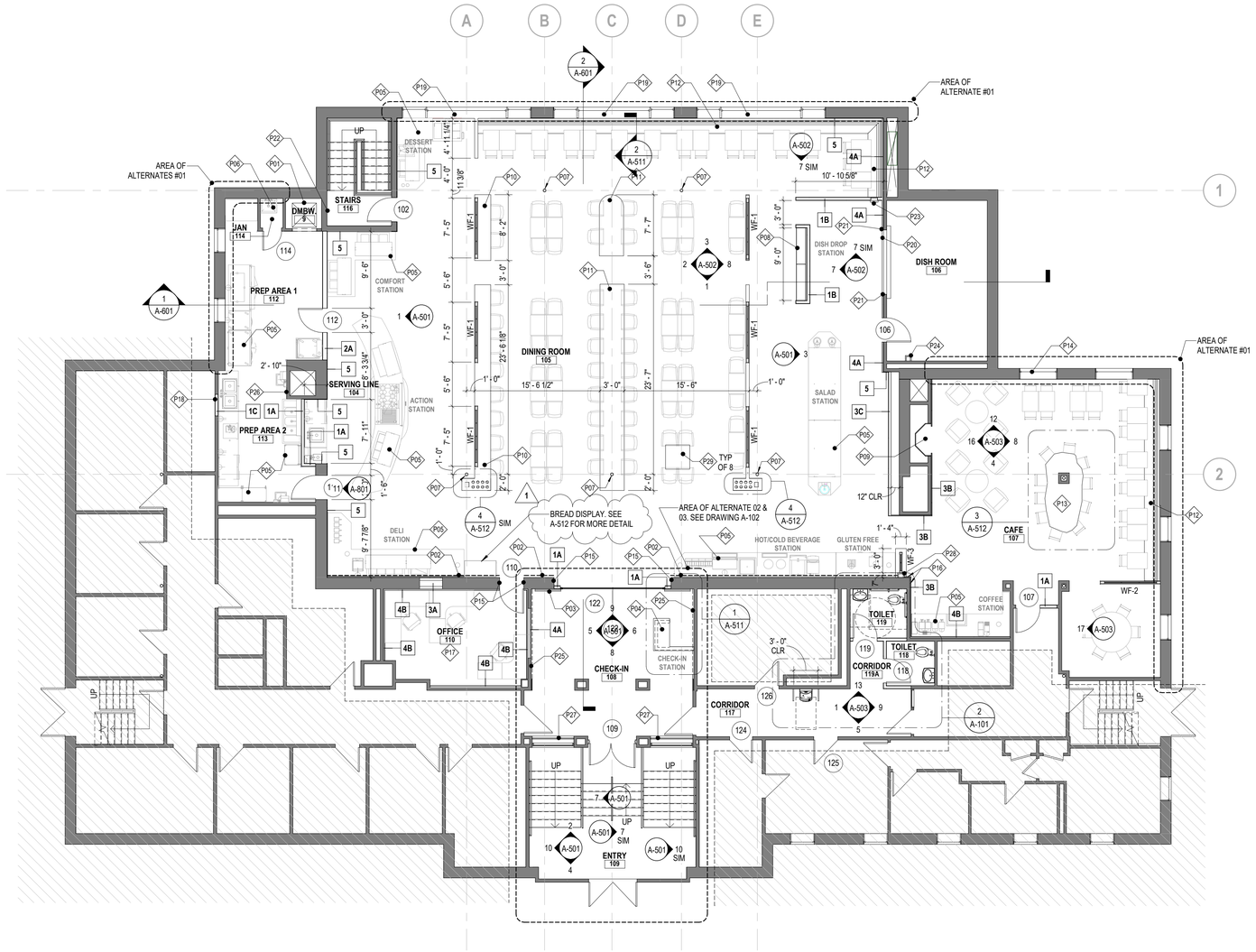

1 construction plan - first floor
1/8" = 1'-0"

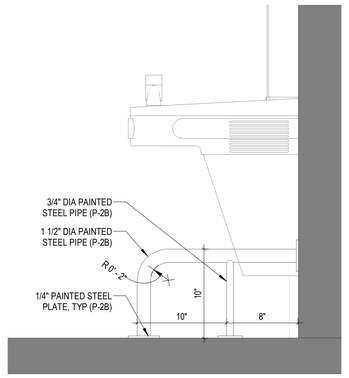

3 DF pipe detail
1 1/2" = 1'-0"

toilet accessory legend

- T-1 36" GRAB BAR
- T-2 42" GRAB BAR
- T-2A 18" GRAB BAR
- T-3 TOILET TISSUE DISPENSER (OFCI)
- T-4 NOT USED
- T-5 SOAP DISPENSER
- T-6 MIRROR
- T-7 PAPER TOWEL DISPENSER (OFCI)
- T-8 ROBE HOOK
- T-9 ROOM SIGNAGE

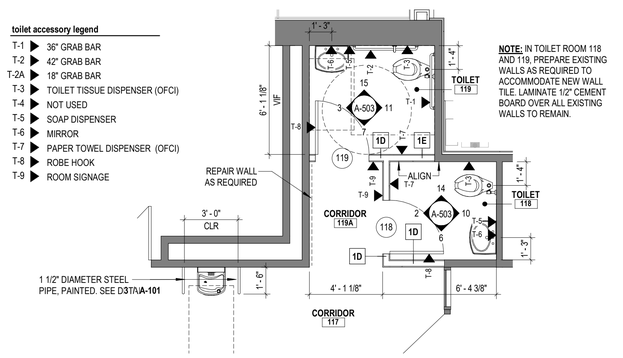

NOTE: IN TOILET ROOM 118 AND 119, PREPARE EXISTING WALLS AS REQUIRED TO ACCOMMODATE NEW WALL TILE. LAMINATE 1/2" CEMENT BOARD OVER ALL EXISTING WALLS TO REMAIN.

2 enlarged toilet room plan
1/4" = 1'-0"

N

CERTIFICATION:

STATUS: BIDDING AND PERMITTING SET

CONSULTANT:

edm
45 South Main Street
Unionville, Connecticut 06085

REVISIONS:

MARK	DATE:	DESCRIPTION
1	11.30.18	addendum #01

UNIVERSITY OF CONNECTICUT
UNIVERSITY PLANNING DESIGN & CONSTRUCTION
31 LEDOYT ROAD UNIT 3038
STORRS, CONNECTICUT 06269-3038
TELEPHONE: (860) 486-2776
FACSIMILE: (860) 486-3177

PROJECT:

Whitney Dining Hall
1346 Storrs Road
Storrs CT. 06269-3038

PROJECT NO: 201687
WORK ORDER NO:
FILE NAME:

AUTHOR: Designer
DRAFTER: Author
SCALE: As indicated
PRINT DATE: 11.02.18
SHEET TITLE: floor plan

SHEET: A-101

EXISTING RESTROOM

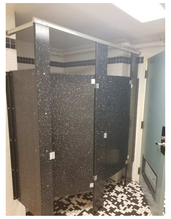

EXISTING STAIR TOWER

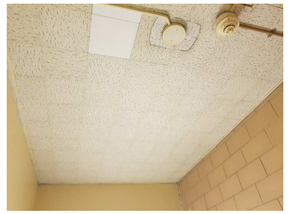

EXISTING FRONT ENTRY

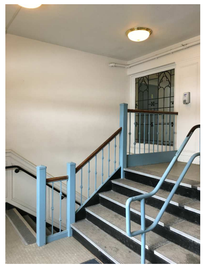

EXISTING OFFICE

EXISTING MAIN DINING AREA

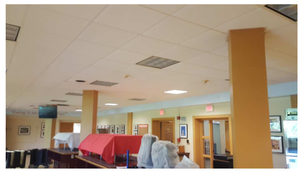

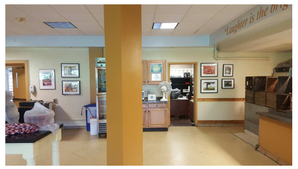

EXISTING SIDE DINING AREA

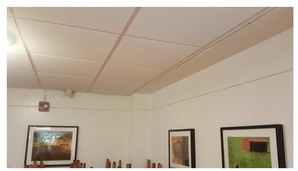

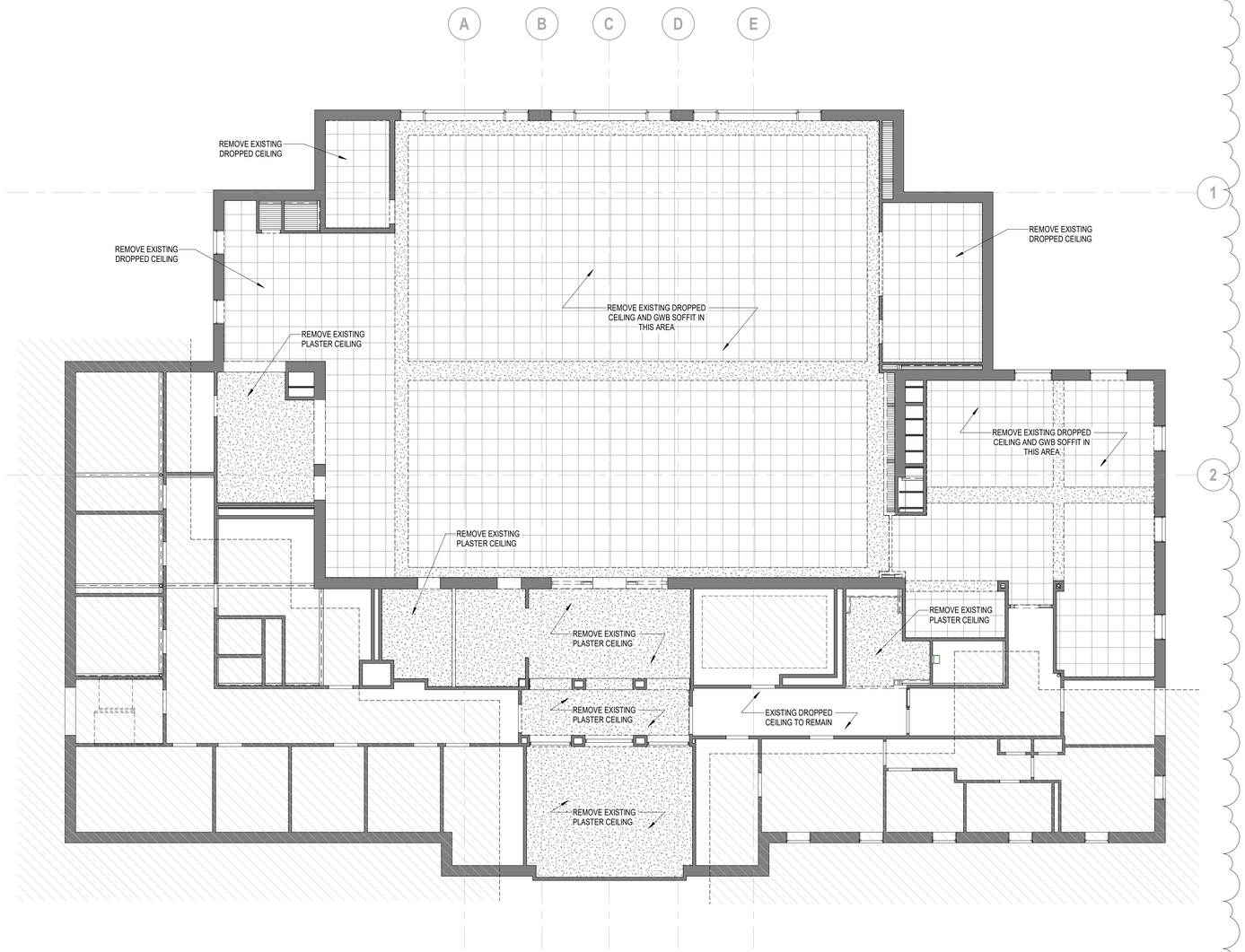

1 demolition ceiling plan
1/8" = 1'-0"

CERTIFICATION:

STATUS: BIDDING AND PERMITTING SET

CONSULTANT:

edm
45 South Main Street
Unionville, Connecticut 06085

REVISIONS:

MARK	DATE:	DESCRIPTION
1	11.30.18	addendum #01

UNIVERSITY OF CONNECTICUT
UNIVERSITY PLANNING DESIGN & CONSTRUCTION
31 LEDOYT ROAD UNIT 3038
STORRS, CONNECTICUT 06269-3038
TELEPHONE: (860) 486-2776
FACSIMILE: (860) 486-3177

PROJECT:

Whitney Dining Hall
1346 Storrs Road
Storrs CT. 06269-3038

PROJECT NO: 201687
WORK ORDER NO:
FILE NAME:

AUTHOR: cw
DRAFTER: cw
SCALE: 1/8" = 1'-0"
PRINT DATE: 11.02.18
SHEET TITLE: demo ceiling plan

SHEET: AD-201

N

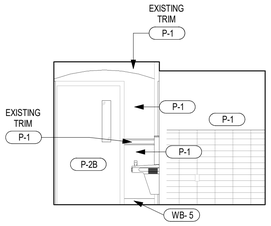

1 corridor - north wall
1/4" = 1'-0"

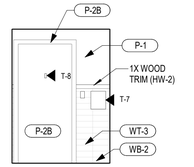

2 toilet 118 - north wall
1/4" = 1'-0"

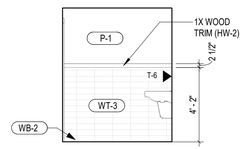

3 toilet 119 - north wall
1/4" = 1'-0"

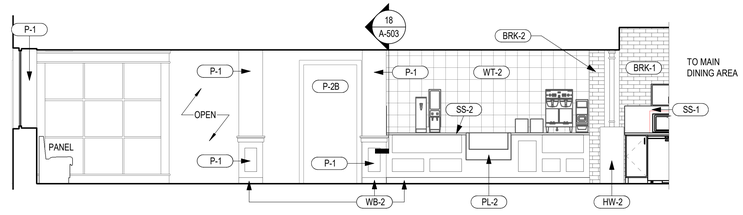

4 cafe - west wall
1/4" = 1'-0"

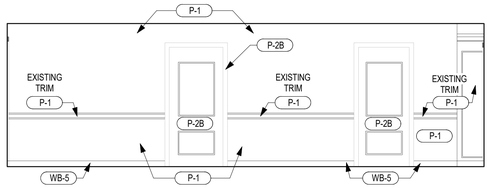

5 corridor - west wall
1/4" = 1'-0"

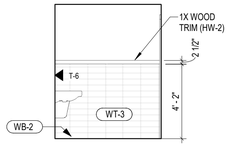

6 toilet 118 - west wall
1/4" = 1'-0"

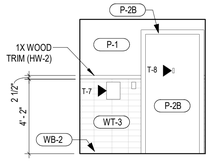

7 toilet 119 - west wall
1/4" = 1'-0"

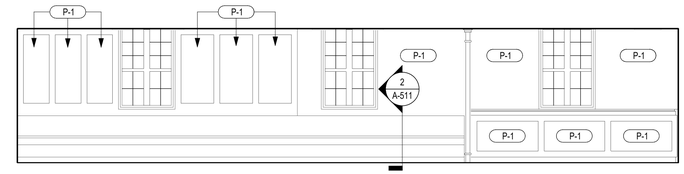

8 cafe - south wall
1/4" = 1'-0"

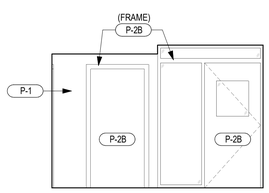

9 corridor - south wall
1/4" = 1'-0"

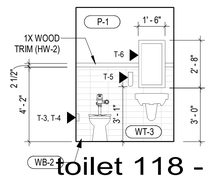

10 toilet 118 - south wall
1/4" = 1'-0"

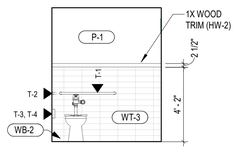

11 toilet 119 - south wall
1/4" = 1'-0"

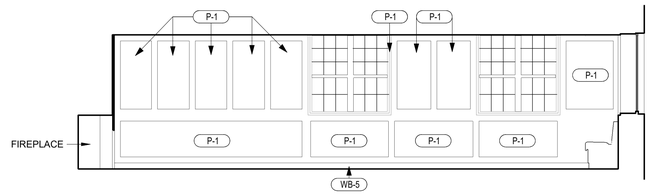

12 cafe - east wall
1/4" = 1'-0"

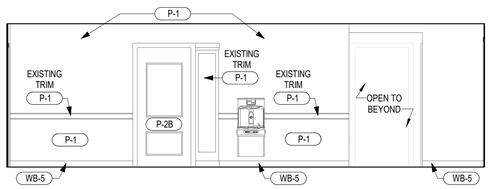

13 corridor - east wall
1/4" = 1'-0"

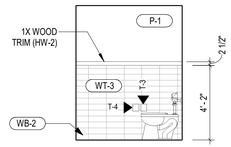

14 toilet 118 - east wall
1/4" = 1'-0"

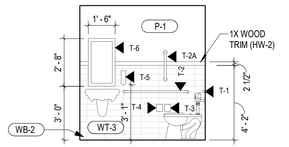

15 toilet 119 - east wall
1/4" = 1'-0"

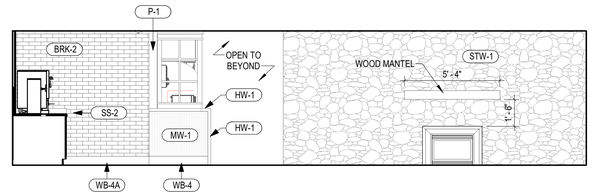

16 cafe - north wall
1/4" = 1'-0"

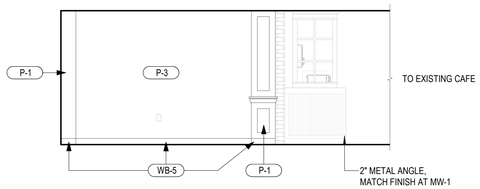

17 cafe - back corner north
1/4" = 1'-0"

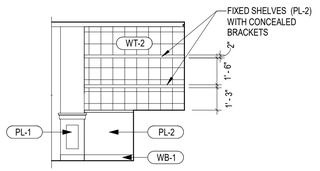

18 cafe - coffee bar shelves
1/4" = 1'-0"

N

CERTIFICATION:

STATUS: BIDDING AND PERMITTING SET

CONSULTANT:

edm
45 South Main Street
Unionville, Connecticut 06085

REVISIONS:

MARK	DATE:	DESCRIPTION
1	11.30.18	addendum #01

UNIVERSITY OF CONNECTICUT
UNIVERSITY PLANNING DESIGN & CONSTRUCTION
31 LEDOYT ROAD UNIT 3038
STORRS, CONNECTICUT 06269-3038
TELEPHONE: (860) 486-2776
FACSIMILE: (860) 486-3177

PROJECT:

Whitney Dining Hall
1346 Storrs Road
Storrs CT. 06269-3038

PROJECT NO: 201687
WORK ORDER NO:
FILE NAME:

AUTHOR: Designer
DRAFTER: Author
SCALE: 1/4" = 1'-0"
PRINT DATE: 11.02.18
SHEET TITLE: interior elevations

SHEET: A-503

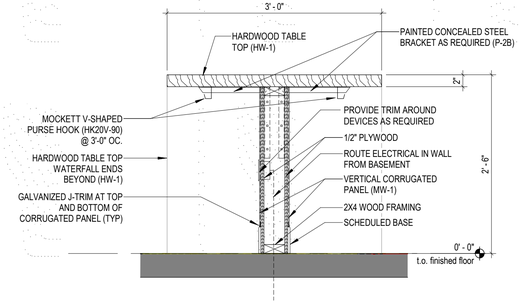

2 main table section
1" = 1'-0"

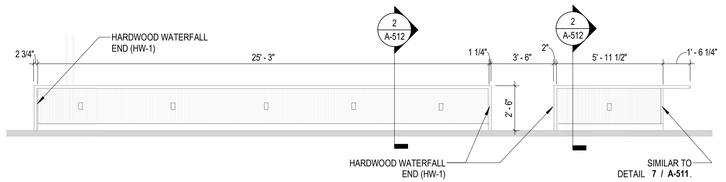

1 main table side elevation
1/4" = 1'-0"

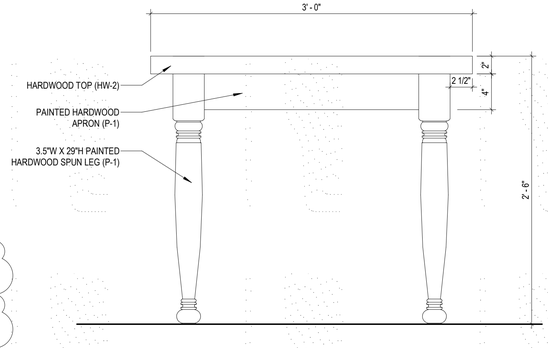

5 spun leg table - side
1 1/2" = 1'-0"

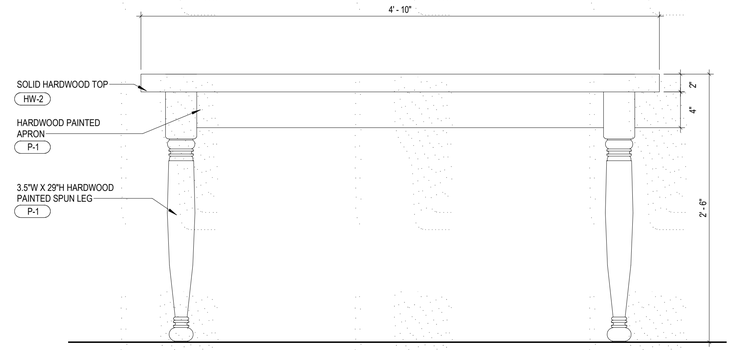

6 spun leg table - front
1 1/2" = 1'-0"

7 bread table
1" = 1'-0"

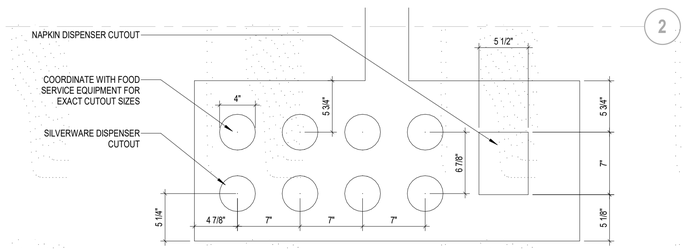

4 silverware/napkin cut-out detail
1 1/2" = 1'-0"

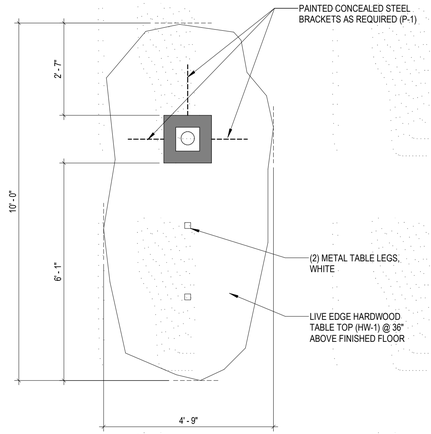

3 enlarged cafe table plan
1/2" = 1'-0"

N

CERTIFICATION:

STATUS: BIDDING AND PERMITTING SET

CONSULTANT:

edm
45 South Main Street
Unionville, Connecticut 06085

REVISIONS:

MARK	DATE:	DESCRIPTION
1	11.30.18	addendum #01

UNIVERSITY OF CONNECTICUT
UNIVERSITY PLANNING DESIGN & CONSTRUCTION
31 LEDOYT ROAD UNIT 3038
STORRS, CONNECTICUT 06269-3038
TELEPHONE: (860) 486-2776
FACSIMILE: (860) 486-3177

PROJECT:

Whitney Dining Hall
1346 Storrs Road
Storrs CT. 06269-3038

PROJECT NO: 201687
WORK ORDER NO:
FILE NAME:

AUTHOR: Designer
DRAFTER: Author
SCALE: As indicated
PRINT DATE: 11.02.18
SHEET TITLE: millwork details

SHEET: A-512

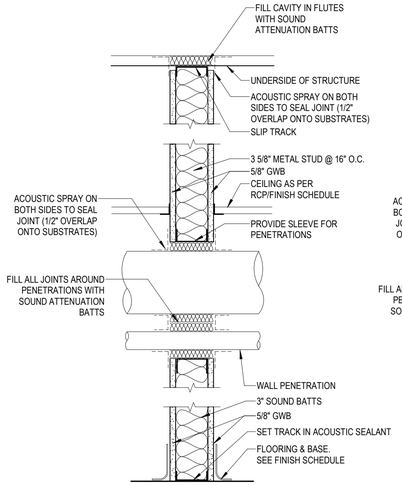

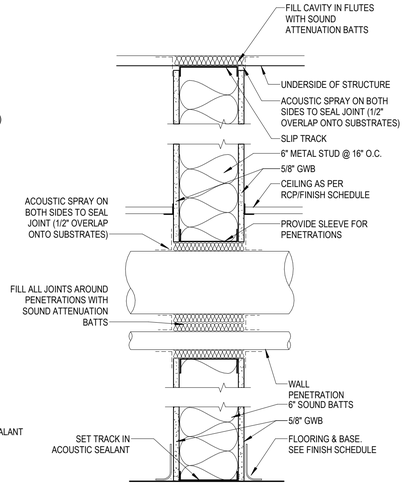

1A — SEE DETAIL ABOVE. 5/8" GWB ON BOTH SIDES OF 3 5/8" METAL STUDS AT 16" O.C. WITH 3" SOUND ATTENUATION BATTS. STUDS AND WALL FINISH TO CONTINUE TO UNDERSIDE OF THE STRUCTURE/METAL DECK.

1B — SAME AS WALL TYPE 1A, EXCEPT THE. STUDS AND WALL FINISH TO CONTINUE TO 6" ABOVE THE CEILING.

1C — WALL INFILL AT EXISTING OPENING. WALL CONSTRUCTION SIMILAR TO WALL TYPE 1A ABOVE. WALL INFILL THICKNESS TO MATCH EXISTING ADJACENT.

1D — SAME AS WALL TYPE 1A, EXCEPT 5/8" GWB ON ONE SIDE (CORRIDOR SIDE) AND 1/2" CEMENT BOARD ON ONE SIDE (RESTROOM SIDE) OF 3 5/8" METAL STUDS.

1E — SAME AS WALL TYPE 1A, EXCEPT 1/2" CEMENT BOARD ON BOTH SIDES OF 3 5/8" METAL STUDS.

2A — SEE DETAIL ABOVE. 5/8" GWB ON BOTH SIDES OF 6" METAL STUDS AT 16" O.C. WITH 3" SOUND ATTENUATION BATTS. STUDS AND WALL FINISH TO CONTINUE TO UNDERSIDE OF THE METAL DECK.

3A — INFILL WALL TO MATCH EXISTING ADJACENT WALL TYPE (BRICK). PROVIDE METAL FRAMING, SUBSTRATE AND BRICK AS REQUIRED TO INFILL THE EXISTING OPENING.

3B — 1/2" CEMENT BACKER BOARD ON ONE SIDE OF 7/8" METAL FURRING. PREPARE SURFACE AS REQUIRED FOR MANUFACTURED STONE VENEER INSTALLATION. STUDS AND WALL FINISH TO 6" ABOVE CEILING.

3C — 1/2" CEMENT BACKER BOARD ON ONE SIDE METAL FRAMING. STUDS TO BE AS FOLLOWS362S162-43 @ 16" OC. TOP SLIP TRACK AND BOTTOM TRACK TO BE 362T-200-43. PREPARE SURFACE AS REQUIRED FOR MANUFACTURED STONE VENEER INSTALLATION. STUDS AND WALL FINISH TO 6" ABOVE CEILING.

4A — 5/8" GWB ON ONE SIDE OF 1 1/2" METAL STUD AS REQUIRED TO INFILL EXISTING OPENING.

4B — 5/8" GWB ON ONE SIDE OF 1 1/2" METAL STUDS @ 16" OC. STUDS AND WALL FINISH TO 6" ABOVE CEILING.

5 — 1/2" GWB LAMINATED OVER EXISTING PLASTER WALL. PREPARE EXISTING PLASTER WALL AS REQUIRED TO ACCEPT NEW DRYWALL. 9SCOPE NOT REQUIRED IF ALTERNATE #01 IS ACCEPTED).

1 wall types
1 1/2" = 1'-0"

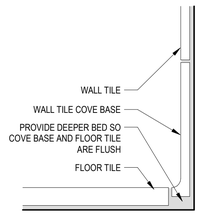

2 cove base detail
6" = 1'-0"

finish schedule

Room Number	Room Name	Floor Finish	Ceiling Finish	Wall Finish North	Wall Finish East	Wall Finish South	Wall Finish West	Wall Base	Door Finish Door	Door Finish Frame	Finish Notes
104	SERVING LINE	EXY-1	ACP-1	WT-1	P-3	N/A	BRK-1	SEE ELEV.	P-2B	P-2B	
105	DINING ROOM	EXISTING	ACP-1	P-1	N/A	SEE ELEV.	BRK-1	SEE ELEV.	P-2B	P-2B	
106	DISH ROOM	EXISTING	EXISTING	EXISTING	EXISTING	EXISTING	EXISTING	EXISTING	P-2B	P-2B	
107	CAFE	LVT-1	TCP-1	STW-1	P-1	P-1	SEE ELEV.	SEE ELEV.	P-2B	P-2B	
108	CHECK-IN	LVT-1	GWB-1	WG-1	P-1	WG-1	P-1	WB-5	P-2B	P-2B	
109	ENTRY	EXISTING/CPT-1	GWB-1	P-1	P-1	P-1	P-1	SEE ELEV.	P-2B	P-2B	CPT-2 IS ONLY TO BE INSTALLED ON TOP LANDING OF STAIRS
110	OFFICE	LVT-1	ACP-1	P-1	P-1	P-3	P-1	WB-6A	P-2B	P-2B	
112	PREP AREA 1	EXY-1	ACP-2	FRP-1	FRP-1	FRP-1	FRP-1	WB-3	P-2B	P-2B	RETURN FRP INTO EXISTING WINDOW OPENING. PROVIDE TRIM AS REQUIRED
113	PREP AREA 2	EXY-1	ACP-2	FRP-1	FRP-1	FRP-1	FRP-1	WB-3	P-2B	P-2B	
114	JAN	EXY-1	EXISTING	P-1	P-1	P-1	P-1	WB-3	P-2B	P-2B	
116	STAIRS	EXISTING	EXISTING	P-1	P-1	P-1	P-1	EXISTING	P-2B	P-2B	
117	CORRIDOR	LVT-1	EXISTING	P-1	P-1	P-1	P-1	WB-5	P-2B	P-2B	
118	TOILET	FT-1	ACP-2	WT-3/P-1	WT-3/P-1	WT-3/P-1	WT-3/P-1	WB-2	P-2B	P-2B	
119	TOILET	FT-1	ACP-2	WT-3/P-1	WT-3/P-1	WT-3/P-1	WT-3/P-1	WB-2	P-2B	P-2B	
119A	CORRIDOR	LVT-1	GWB-1	P-1	P-1	P-1	P-1	WB-5	P-2B	P-2B	

material list

PAINT

P-1: BENJAMIN MOORE; COLOR: WHITE DIAMOND OC-61, MAIN WALL PAINT

P-2B: BENJAMIN MOORE, COLOR: CHEATING HEART 1617, BLACK DOOR & FRAME PAINT

P-3: BENJAMIN MOORE; COLOR: TAWNY ROSE 2173-20, ACCENT WALL PAINT

WALL BASE

WB-1: INTEGRATED TILE WALL BASE, CERAMIC TECHNICS; STONEWARE ARTISTIC ELEMENT, 3"X12" 8.5MM MATTE R10, COLOR: DARK, WITH SCHLUTER-DILEX-AHKA 80 TSDA, COVE-SHAPED TRANSITION.

WB-2: INTEGRATED TILE WALL BASE, DALTILE; MODERN DIMENSIONS, 4"X12" FLAT TOP COVE BASE A-34C1; COLOR: 0182 SUEDE GRAY. WITH LATICRETE GROUT; COLOR: 90 LIGHT PEWTER

WB-3: INTEGRAL EPOXY WALL BASE, TO MATCH EPOXY FLOOR

WB-4: JOHNSONITE MANDALAY MILLWORK WALL BASE; COLOR: 82 BLACK PEARL

WB-4A: JOHNSONITE MANDALAY MILLWORK WALL BASE; COLOR: 113 CHESTNUTTY

WB-5: JOHNSONITE INFLECTION MILLWORK WALL BASE; COLOR: 45 SANDALWOOD

WB-6: JOHNSONITE 4" STRAIGHT BASE; COLOR: 82 BLACK PEARL

WB-6A: JOHNSONITE 4" STRAIGHT BASE; COLOR: 45 SANDALWOOD

PLASTIC LAMINATE

PL-1: WILSONART PLASTIC LAMINATE; COLOR: LOST PINE, Y0473K-16

PL-2: WILSONART PLASTIC LAMINATE 5-PIECE CABINET DOORS; STYLE: NARROW SHAKER, 2.25" SHAKER DOOR; COLOR: LINEN, D427-60

PL-3: FORMICA DECOMETAL LAMINATE; COLOR M2178 BRUSHED STAINLESS STEEL

PL-4: WILSONART PLASTIC LAMINATE; COLOR: LINEN, D427-60

SOLID SURFACE

SS-1: CORIAN QUARTZ SOLID SURFACE; COLOR: SNOW WHITE

SS-2: 22 OUNCE COPPER COUNTERTOP ADHERED TO INDUSTRIAL GRADE MDF CORE; COPPER TO HAVE SCULPT NOUVEAU TRADITIONAL ANTIQUING PATINA LIGHTLY APPLIED

WALL TILE

WT-1: CERMIC TECHNICS, CERAMIC WALL TILE; 8X8 STONEWARE ARTISTIC DESIGN ELEMENTS, COLOR: LIGHT DECO. WITH LATICRETE GROUT; COLOR: 60 DUSTY GREY. WITH SCHLUTER-DILEX-AHKA 80 TSDA, COVE-SHAPED TRANSITION.

WT-2: CERMIC TECHNICS, CERAMIC WALL TILE; 8X8 STONEWARE ARTISTIC DESIGN ELEMENTS, COLOR: DARK. WITH LATICRETE GROUT; COLOR: 60 DUSTY GREY.

WT-3: DALTILE, GLAZED CERAMIC WALL TILE; 4"X12" MODERN DIMENSIONS, COLOR: 0182 SUEDE GRAY. WITH LATICRETE GROUT; COLOR: 90 LIGHT PEWTER

FLOORING

EXY-1: EPOXY (RESINOUS) FLOORING WITH INTEGRAL COVE BASE; COLOR: STEEL GRAY

LVT-1: MANNINGTON COMMERICAL, AMTICO LUXURY VINYL TILE; 6"X36" PLANK, COLOR: MANOR OAK

TER-1: EXISTING TERRAZZO FLOORING. REFRESH FINISH AS REQUIRED FOR NEW APPEARANCE

FT-1: DALTILE, FLOOR TILE; KEYSTONES, 2" HEXAGON MOSAIC, COLOR: ARCTIC WHITE D617. WITH LATICRETE GROUT; COLOR: 90 LIGHT PEWTER

FT-2: FLORIM USA BASALTINE DARK GREY 12X12 1096203

CPT-1: MATS, INC SUPREME NOP; COLOR: TWEED BROWN

HARDWOOD

HW-1: HARDWOOD W/ TRANSPARENT FINISH

HW-2: HARDWOOD W/ STAINED FINISH, TO MATCH ARCHITECTS SAMPLE

HW-3: HARDWOOD W/ TRANSPARENT FINISH (PART OF ALTERNATE #01 AND #02)

HW-4: HARDWOOD W/ OPAQUE FINISH

METAL

MW-1: BRIDGER STEEL BUILDER SERIES 1/4" CORRUGATED METAL PANEL; VERTICAL ORIENTATION; FINISH TO BONDERIZED; PROVIDE J-TRIM, CORNER TRIM AND OTHER TRIMS REQUIRED FOR EACH APPLICATION

MW-2: BRIDGER STEEL BUILDER SERIES 1/4" CORRUGATED METAL PANEL; HORIZONTAL ORIENTATION; FINISH TO BONDERIZED; PROVIDE J-TRIM, CORNER TRIM AND OTHER TRIMS REQUIRED FOR EACH APPLICATION

CEILING

ACP-1: 2" X 2" SUSPENDED ACOUSTIC CEILING SYSTEM, ARMSTRONG OPTIMA 3251 WITH SUPRAFINE XL 9/16" GRID TEE SYSTEM

ACP-2: 2" X 2" SUSPENDED ACOUSTIC CEILING SYSTEM, ARMSTRONG OPTIMA HEALTHZONE 3314 WITH ALUMINUM PRELUDE PLUS XL 15/16" GRID TEE SYSTEM

GWB-1: 5/8" GWB CEILING WITH METAL FRAMING AS REQUIRED

TCP-1: 2" X 2" SUSPENDED CEILING SYSTEM, ARMSTRONG METALWORKS TIN 56008 (EXTRA MICROPERFORATED) WITH SUPRAFINE XL 9/16" GRID TEE SYSTEM AND TOTAL ACOUSTICS INFILL PANEL 8200100 ABOVE. FINISH OF PANEL TO BE LACQUERED STEEL AND FINISH OF GRID TO BE SILVER SATIN. PROVIDE HOLD DOWN CLIPS AS REQUIRED FOR PANELS TO LAY FLAT

WALL FINISHING/VENEER

BRK-1: NEWLY EXPOSED EXISTING BRICK WALL. CLEAN/REPAIR BRICK FOR EXPOSURE

BRK-2: NEW THIN BRICK TO MATCH EXISTING

WG-1A: CUSTOM, LEVEL DIGITAL WALL COVERING; VINYL STIPPLE -TYPE II 20 OZ VINYL WALL COVERING. CUSTOM GRAPHIC DESIGN FOR WALL COVERING TO BE PROVIDED BY ARCHITECT; WALL 1

WG-1B: CUSTOM, LEVEL DIGITAL WALL COVERING; VINYL STIPPLE -TYPE II 20 OZ VINYL WALL COVERING. CUSTOM GRAPHIC DESIGN FOR WALL COVERING TO BE PROVIDED BY ARCHITECT; WALL 2

FRP-1: NUDO FIBERCORR FRP WALL PANELS F3C400; EMBOSSED WHITE (50)

STW-1: MANUFACTURERD STONE VENEER. VENEER SHALL BE MOUNTED OVER TILE BACKER BOARD WITH SCRATCH COAT AND METAL LATH

TCW-1: WALLTALKERS TAC-WALL LAMINATED ON 1/4" HARDBOARD; COLOR TBD; PROVIDE PAINTED HARDWOOD TRIM AROUND PERIMETER; HANG ON WALL WITH CLEAT AS REQUIRED

TRANSITION STRIPS

TS-1: 1/8" THICK ALUMINUM THRESHOLD PLATE; PEMKO 18/1A

TS-2: JOHNSONITE RUBBER TRANSITION EDGE GUARD. SIZE AS REQUIRED. COLOR TBD

TS-3: JOHNSONITE RUBBER TRANSITION REDUCER. SIZE AS REQUIRED. COLOR TBD

TS-4: SCHLUTER SYSTEMS SLOPED TRANSITIONS; SCHLUTER RENO-U; SIZE AS REQUIRED; FINISH TO BE SATIN ANOZIDED ALUMINUM

FABRIC/UPHOLSTERY

UP-1: BANQUETTE AT MAIN DINING. DESIGNTEX STRATUM 3868-501 LILYPAD

UP-2: BANQUETTE AT CAFE. DESIGNTEX STRATUM 3868-301 EMBER

RS-1: ROLLER SHADE FABRIC TO BE: DRAPER SHEERWEAVE STYLE SW2705 (5% OPEN); COLOR: P28 OYSTER/CHARCOAL

N

CERTIFICATION:

STATUS: BIDDING AND PERMITTING SET

CONSULTANT:

edm
45 South Main Street
Unionville, Connecticut 06085

REVISIONS:

MARK	DATE:	DESCRIPTION
1	11.30.18	addendum #01

UNIVERSITY OF CONNECTICUT
UNIVERSITY PLANNING DESIGN & CONSTRUCTION
31 LEDOYT ROAD UNIT 3038
STORRS, CONNECTICUT 06269-3038
TELEPHONE: (860) 486-2776
FACSIMILE: (860) 486-3177

PROJECT:

Whitney Dining Hall
1346 Storrs Road
Storrs CT. 06269-3038

PROJECT NO: 201687
WORK ORDER NO:
FILE NAME:

AUTHOR: Designer
DRAFTER: Author
SCALE: As indicated
PRINT DATE: 11.02.18
SHEET TITLE: miscellaneous details

SHEET: A-901

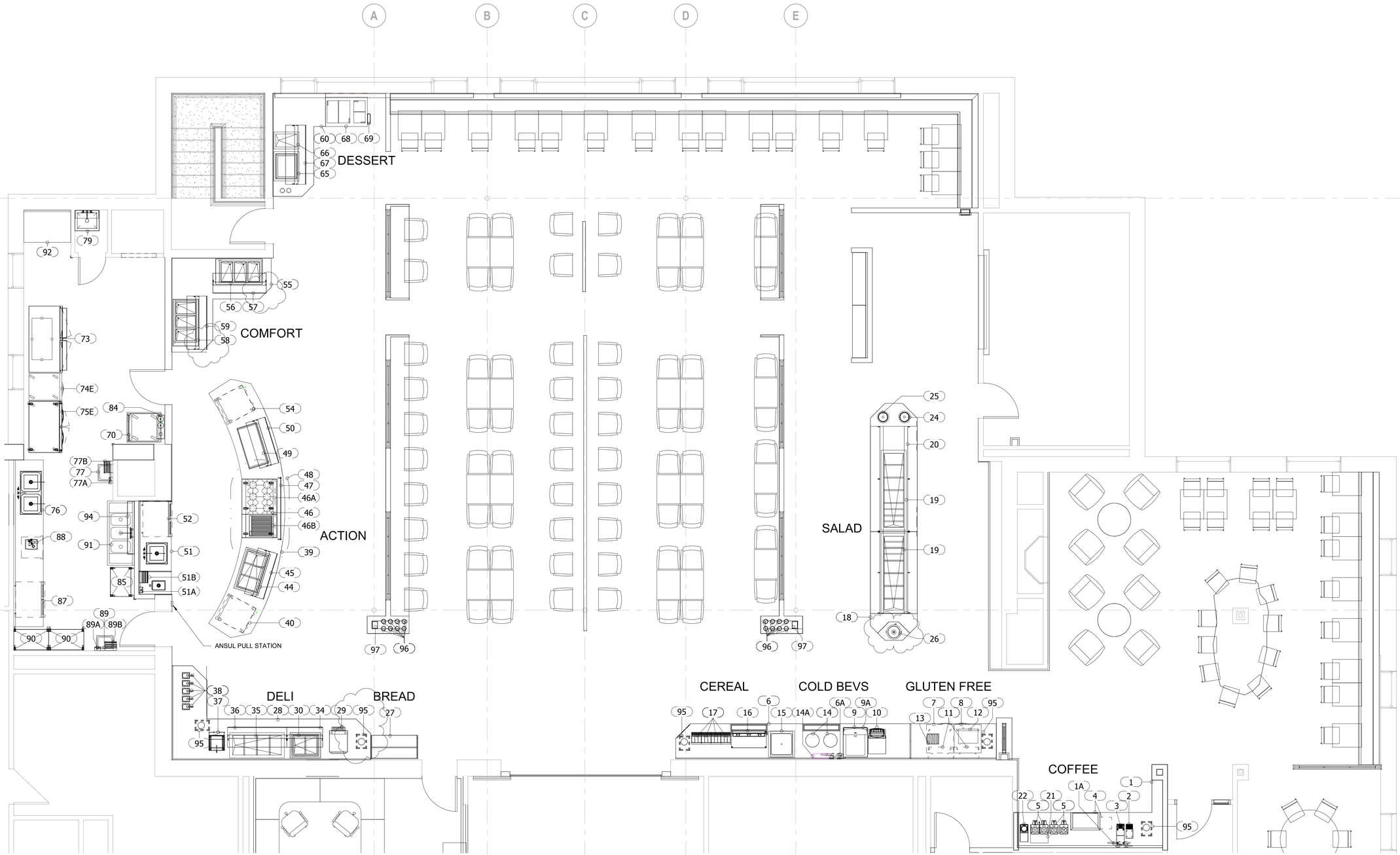

1 First Floor Equipment Layout
1/4" = 1'-0"

N

CERTIFICATION:

STATUS: BIDDING AND PERMITTING SET

CONSULTANT:

edm
45 South Main Street
Unionville, Connecticut 06085

REVISIONS:

MARK	DATE:	DESCRIPTION
1	11.30.18	addendum #01

UNIVERSITY OF CONNECTICUT
UNIVERSITY PLANNING DESIGN & CONSTRUCTION
31 LEDOYT ROAD UNIT 3038
STORRS, CONNECTICUT 06269-3038
TELEPHONE: (860) 486-2776
FACSIMILE: (860) 486-3177

PROJECT:

Whitney Dining Hall
1346 Storrs Road
Storrs CT. 06269-3038

PROJECT NO: 201687
WORK ORDER NO:
FILE NAME:
AUTHOR:
DRAFTER:
SCALE: 1/4" = 1'-0"
PRINT DATE: 11.02.2018
SHEET TITLE:
FOODSERVICE EQUIPMENT LAYOUT

SHEET:

K2.1

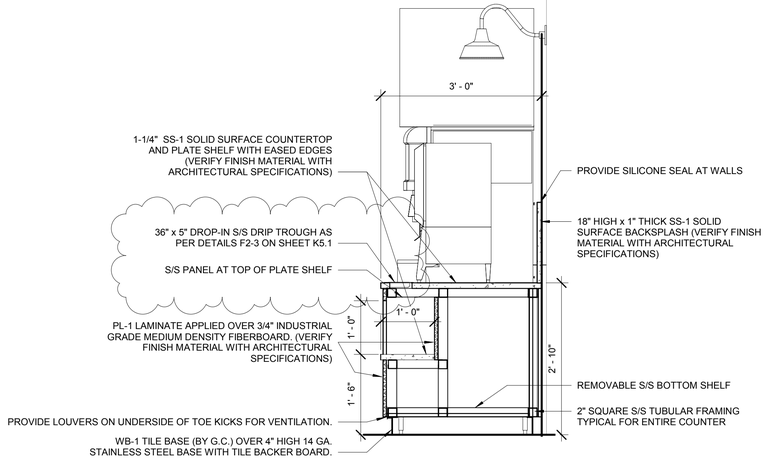

Item No. 6 - Cereal/Cold Beverage/Gluten Free Counter Section 1
3/4" = 1'-0"

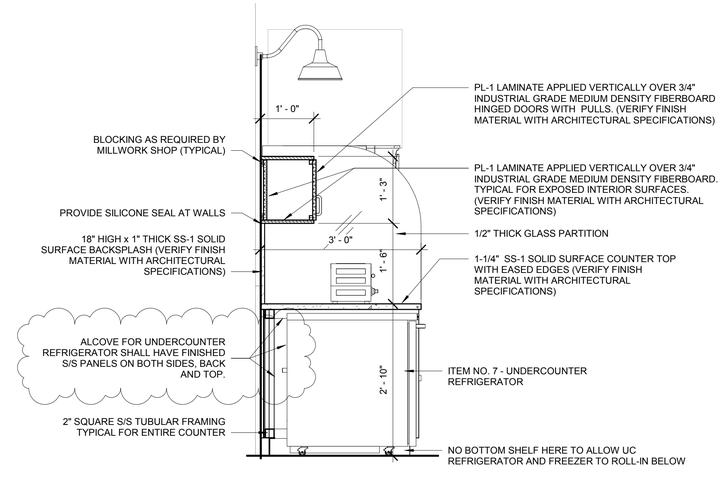

Item No. 6 - Cereal/Cold Beverage/Gluten Free Counter Section 2
3/4" = 1'-0"

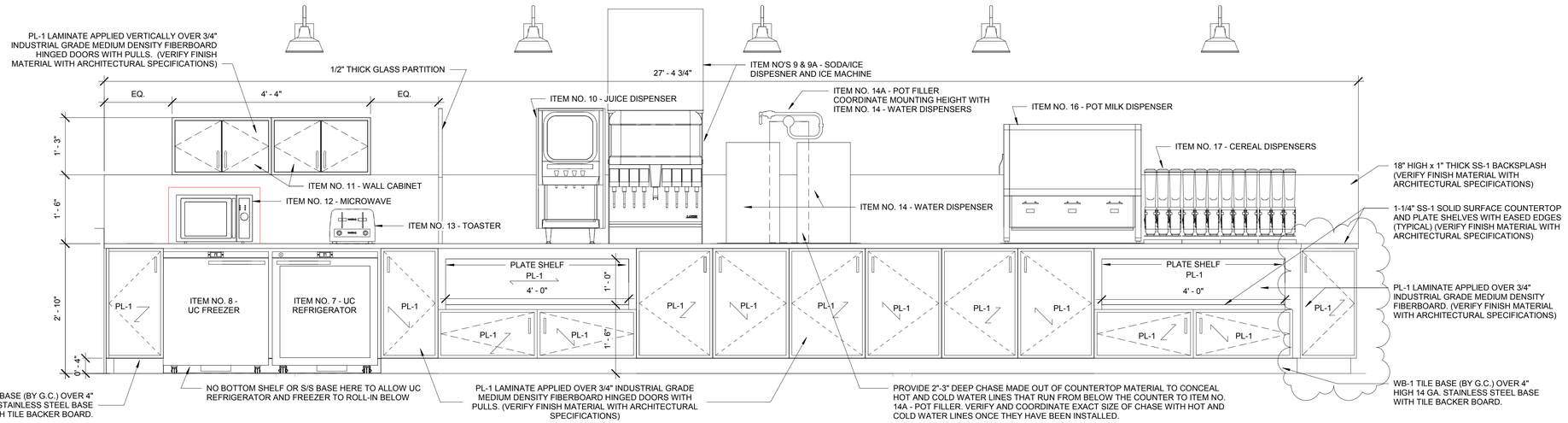

Item No. 6 - Cereal/Cold Beverage/Gluten Free Counter Elevation
3/4" = 1'-0"

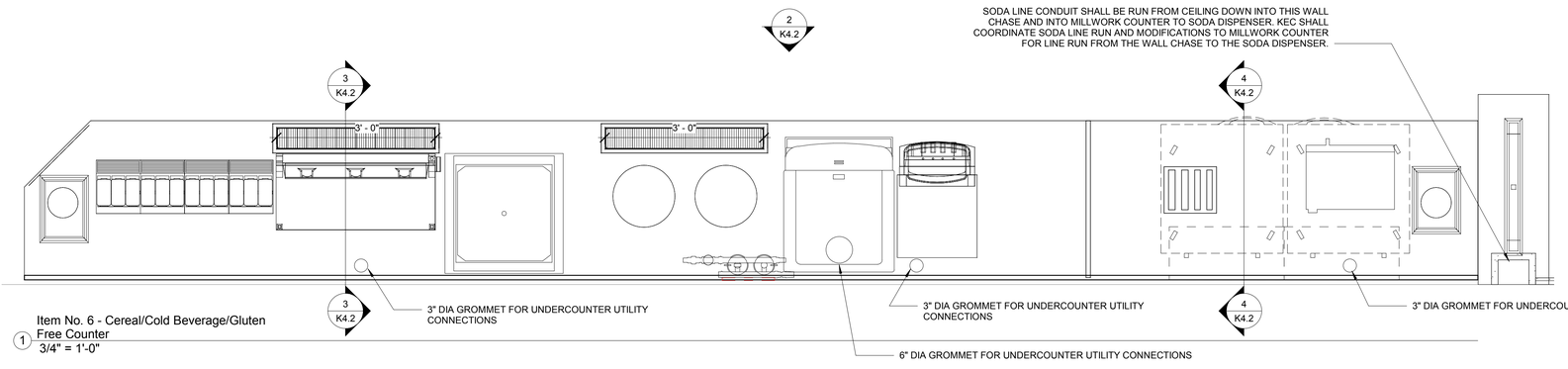

Item No. 6 - Cereal/Cold Beverage/Gluten Free Counter
3/4" = 1'-0"

N

CERTIFICATION:

STATUS: BIDDING AND PERMITTING SET

CONSULTANT:

edm
45 South Main Street
Unionville, Connecticut 06085

REVISIONS:

MARK	DATE:	DESCRIPTION
1	11.30.18	addendum #01

UNIVERSITY OF CONNECTICUT
UNIVERSITY PLANNING DESIGN & CONSTRUCTION
31 LEDYARD ROAD UNIT 3038
STORRS, CONNECTICUT 06269-3038
TELEPHONE: (860) 486-2776
FACSIMILE: (860) 486-3177

PROJECT:

Whitney Dining Hall
1346 Storrs Road
Storrs CT. 06269-3038

PROJECT NO: 201687
WORK ORDER NO:
FILE NAME:
AUTHOR:
DRAFTER:
SCALE: 3/4" = 1'-0"
PRINT DATE: 11.02.2018
SHEET TITLE:
FOODSERVICE MILLWORK DRAWINGS

SHEET:

K4.2

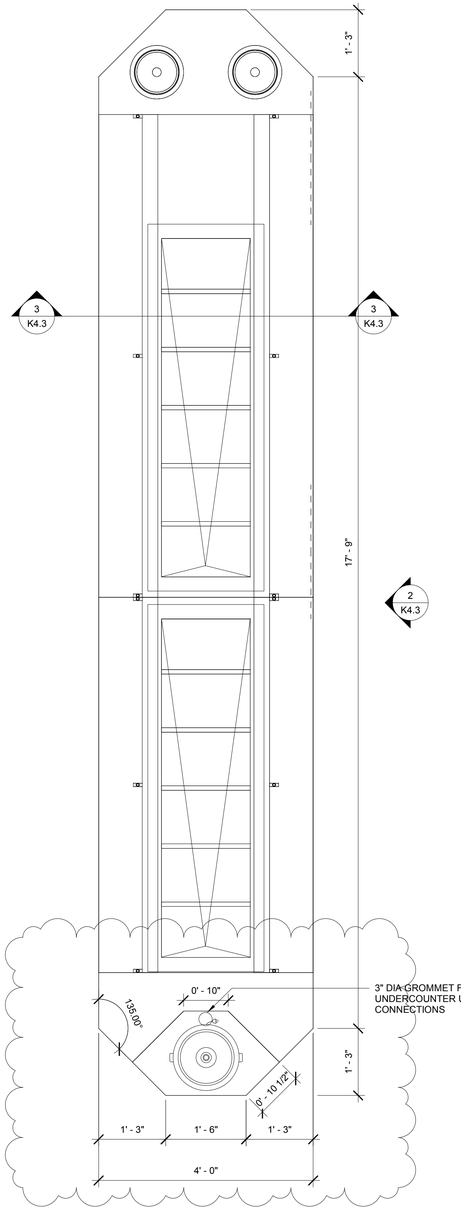

1 Item No. 18 - Salad Bar
3/4" = 1'-0"

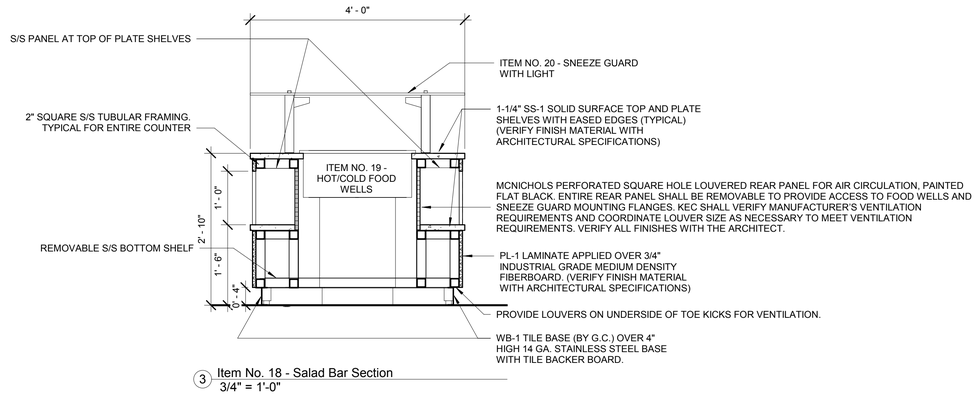

3 Item No. 18 - Salad Bar Section
3/4" = 1'-0"

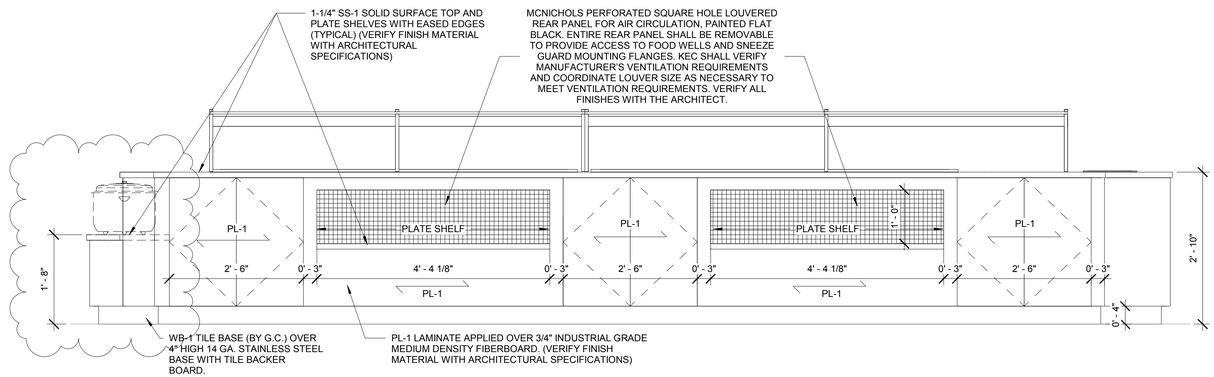

2 Item No. 18 - Salad Bar Elevation
3/4" = 1'-0"

N

CERTIFICATION:

STATUS: BIDDING AND PERMITTING SET

CONSULTANT:

edm
45 South Main Street
Unionville, Connecticut 06085

REVISIONS:

MARK	DATE:	DESCRIPTION
1	11.30.18	addendum #01

UNIVERSITY OF CONNECTICUT
UNIVERSITY PLANNING DESIGN & CONSTRUCTION
31 LEDOYT ROAD UNIT 3038
STORRS, CONNECTICUT 06269-3038
TELEPHONE: (860) 486-2776
FACSIMILE: (860) 486-3177

PROJECT:

Whitney Dining Hall
1346 Storrs Road
Storrs CT. 06269-3038

PROJECT NO: 201687
WORK ORDER NO:
FILE NAME:

AUTHOR:
DRAFTER:
SCALE: 3/4" = 1'-0"
PRINT DATE: 11.02.2018
SHEET TITLE:
FOODSERVICE MILLWORK DRAWINGS

SHEET:

K4.3

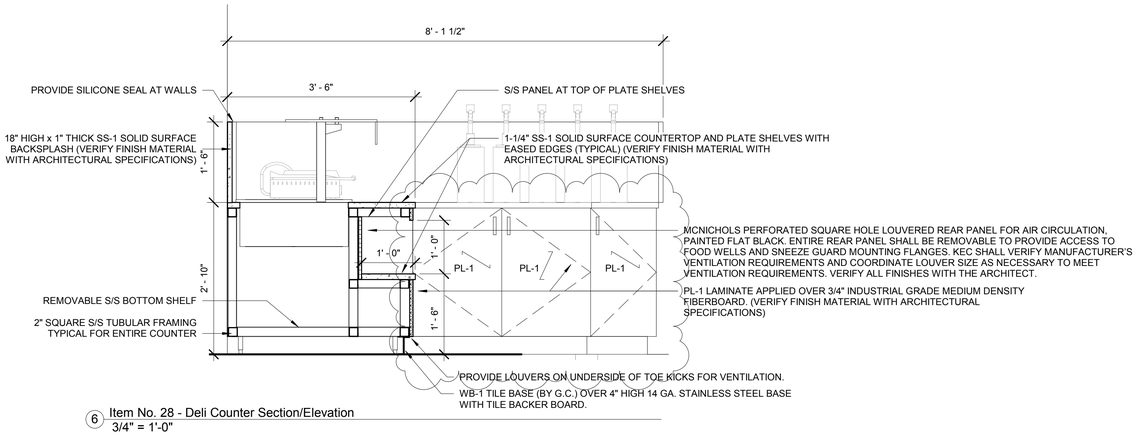

6 Item No. 28 - Deli Counter Section/Elevation
3/4" = 1'-0"

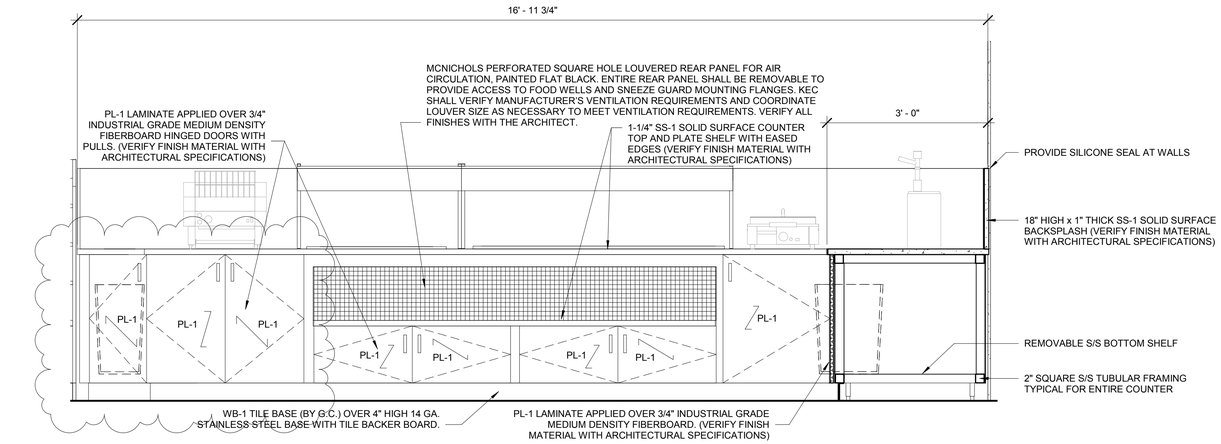

5 Item No. 28 - Deli Counter
3/4" = 1'-0"

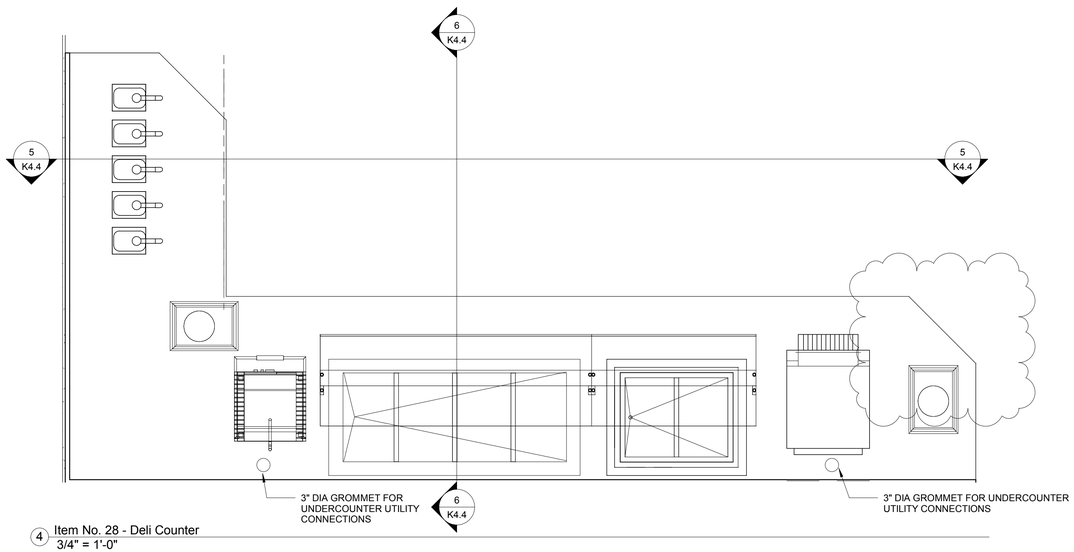

4 Item No. 28 - Deli Counter
3/4" = 1'-0"

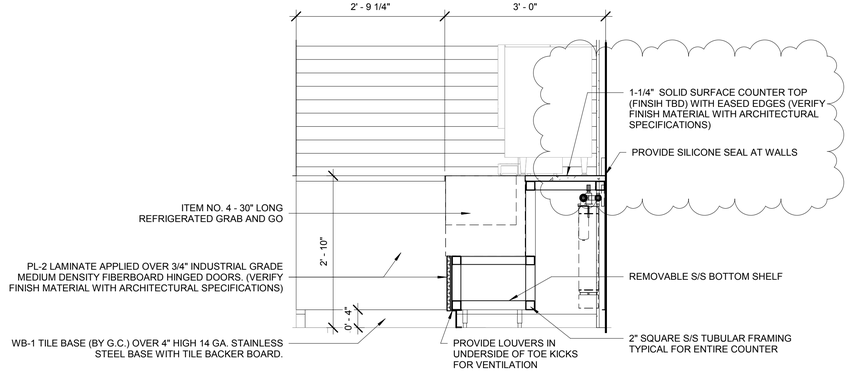

3 Item No. 1 - Coffee Counter Section
3/4" = 1'-0"

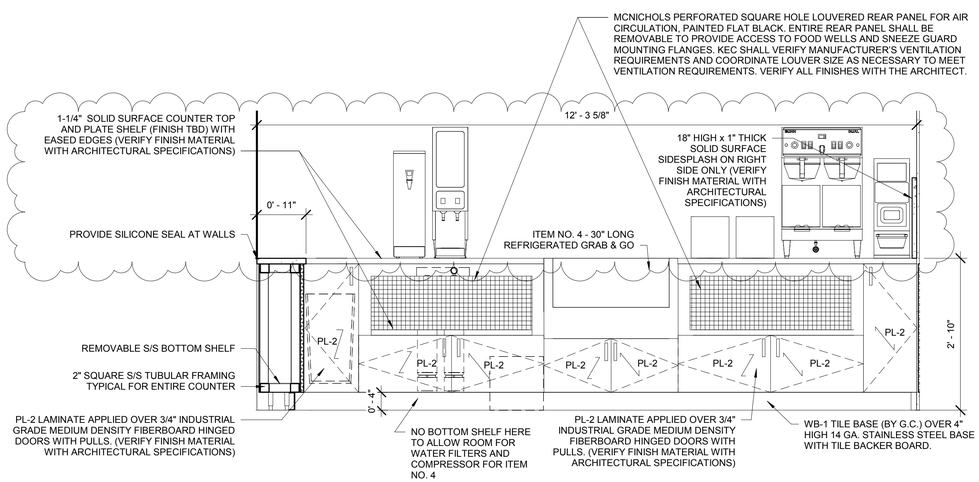

Item No. 1 - Coffee Counter
2 Section/Elevation
3/4" = 1'-0"

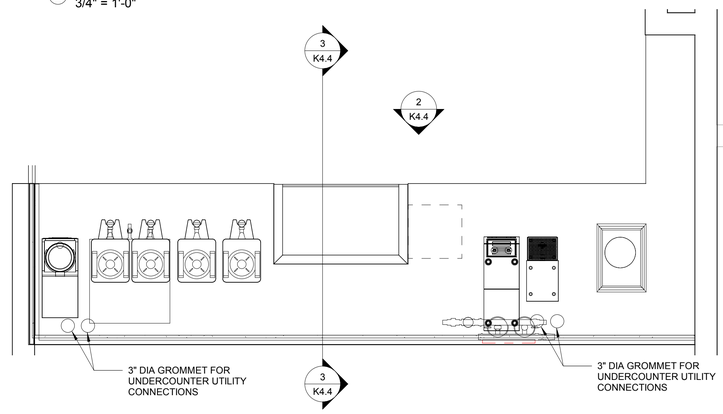

1 Item No. 1 - Coffee Counter
3/4" = 1'-0"

N

CERTIFICATION:

STATUS: BIDDING AND PERMITTING SET

CONSULTANT:

edm
45 South Main Street
Unionville, Connecticut 06085

REVISIONS:

MARK	DATE:	DESCRIPTION
1	11.30.18	addendum #01

UNIVERSITY OF CONNECTICUT
UNIVERSITY PLANNING DESIGN & CONSTRUCTION
31 LEDOYT ROAD UNIT 3038
STORRS, CONNECTICUT 06269-3038
TELEPHONE: (860) 486-2776
FACSIMILE: (860) 486-3177

PROJECT:

Whitney Dining Hall
1346 Storrs Road
Storrs CT. 06269-3038

PROJECT NO: 201687
WORK ORDER NO:
FILE NAME:

AUTHOR:
DRAFTER:
SCALE: 3/4" = 1'-0"
PRINT DATE: 11.02.2018
SHEET TITLE:
FOODSERVICE MILLWORK DRAWINGS

SHEET:

K4.4

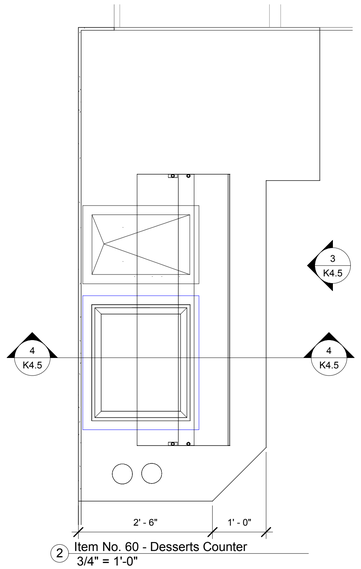

2 Item No. 60 - Desserts Counter
3/4" = 1'-0"

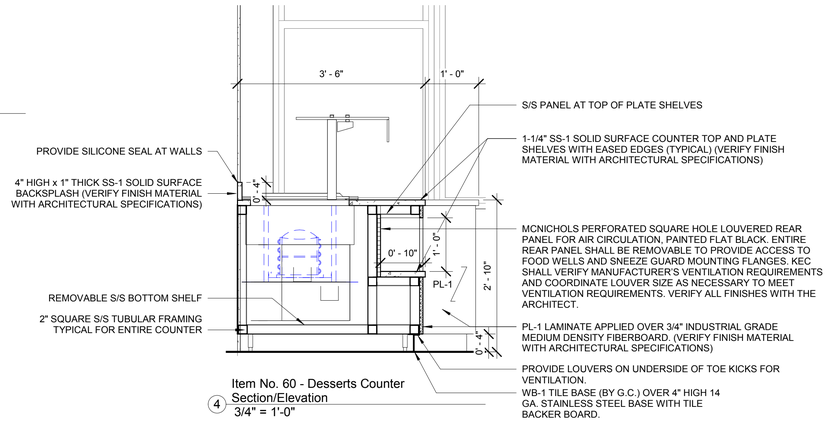

4 Item No. 60 - Desserts Counter
Section/Elevation
3/4" = 1'-0"

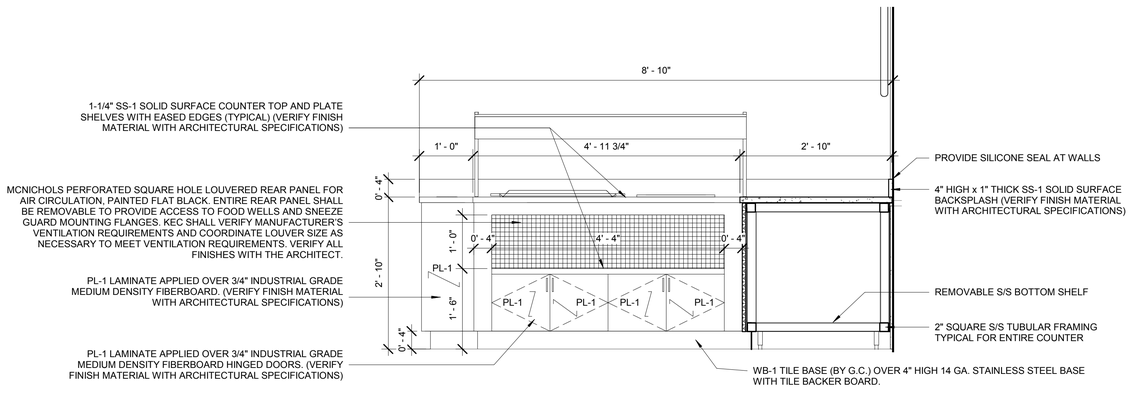

3 Item No. 60 - Desserts Counter
3/4" = 1'-0"

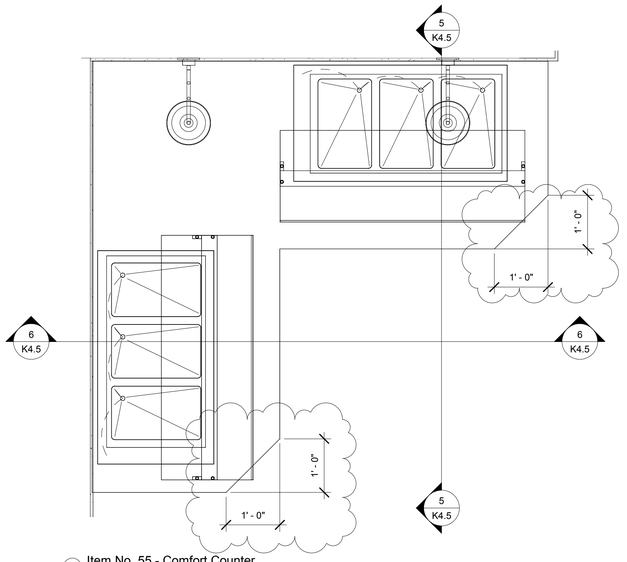

1 Item No. 55 - Comfort Counter
3/4" = 1'-0"

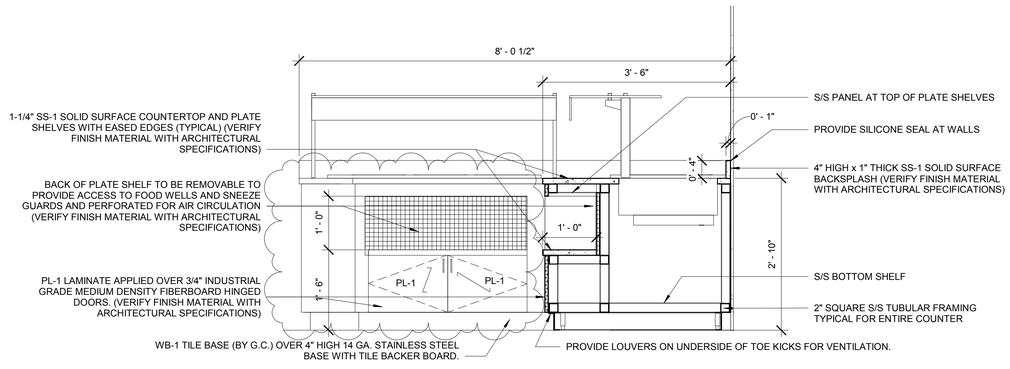

5 Item No. 55 - Comfort Counter
Section/Elevation 1
3/4" = 1'-0"

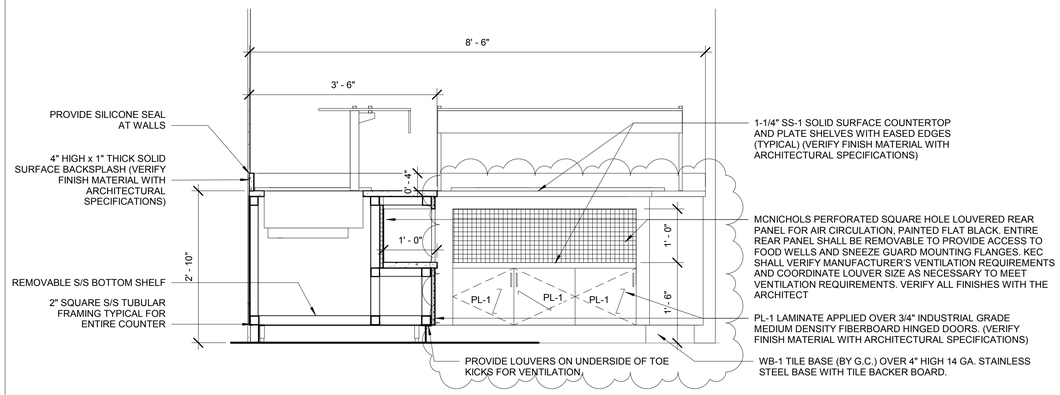

6 Item No. 55 - Comfort Counter
Section/Elevation 2
3/4" = 1'-0"

N

CERTIFICATION:

STATUS: BIDDING AND PERMITTING SET

CONSULTANT:

edm
45 South Main Street
Unionville, Connecticut 06085

REVISIONS:

MARK	DATE:	DESCRIPTION
1	11.30.18	addendum #01

UNIVERSITY OF CONNECTICUT
UNIVERSITY PLANNING DESIGN & CONSTRUCTION
31 LEDOYT ROAD UNIT 3038
STORRS, CONNECTICUT 06269-3038
TELEPHONE: (860) 486-2776
FACSIMILE: (860) 486-3177

PROJECT:

Whitney Dining Hall
1346 Storrs Road
Storrs CT. 06269-3038

PROJECT NO: 201687
WORK ORDER NO:
FILE NAME:

AUTHOR:
DRAFTER:
SCALE: 3/4" = 1'-0"
PRINT DATE: 11.02.2018
SHEET TITLE:

FOODSERVICE MILLWORK DRAWINGS

SHEET:

K4.5

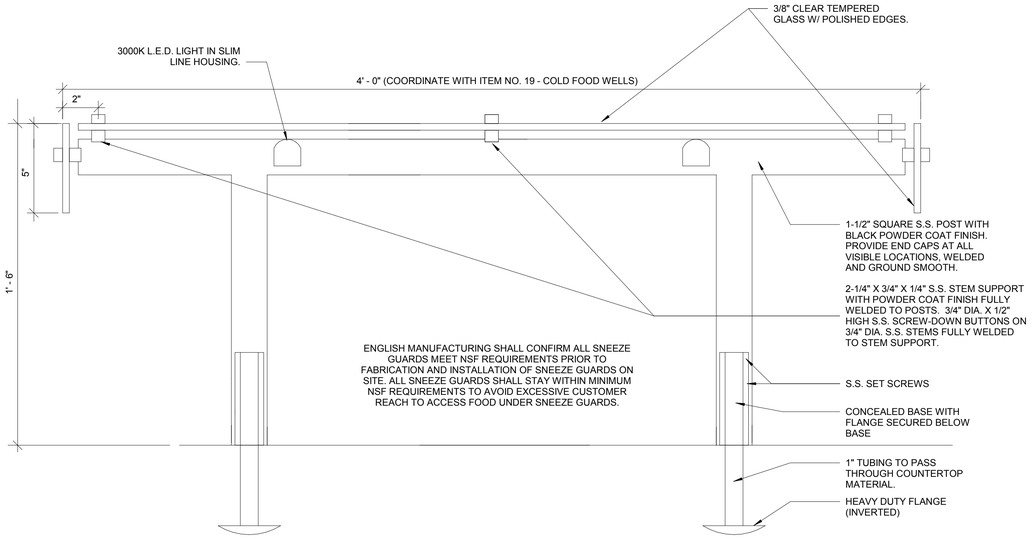

SALAD BAR SNEEZE GUARD W/ LIGHT

F2 66

SCALE: N.T.S.

ENGLISH MANUFACTURING SHALL CONFIRM ALL SNEEZE GUARDS MEET NSF REQUIREMENTS PRIOR TO FABRICATION AND INSTALLATION OF SNEEZE GUARDS ON SITE. ALL SNEEZE GUARDS SHALL STAY WITHIN MINIMUM NSF REQUIREMENTS TO AVOID EXCESSIVE CUSTOMER REACH TO ACCESS FOOD UNDER SNEEZE GUARDS.

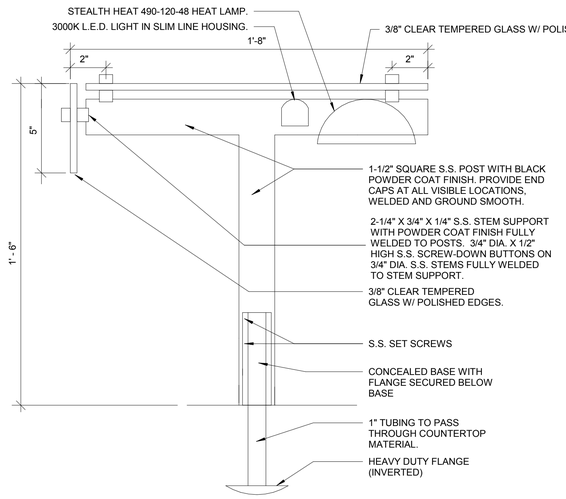

SNEEZE GUARD W/ HEAT & LIGHT

F2 70

SCALE: N.T.S.

ENGLISH MANUFACTURING SHALL CONFIRM ALL SNEEZE GUARDS MEET NSF REQUIREMENTS PRIOR TO FABRICATION AND INSTALLATION OF SNEEZE GUARDS ON SITE. ALL SNEEZE GUARDS SHALL STAY WITHIN MINIMUM NSF REQUIREMENTS TO AVOID EXCESSIVE CUSTOMER REACH TO ACCESS FOOD UNDER SNEEZE GUARDS.

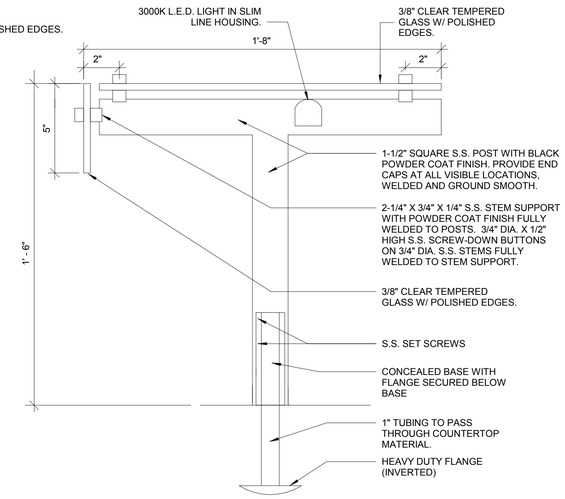

SNEEZE GUARD W/ LIGHT

F2 70

SCALE: N.T.S.

ENGLISH MANUFACTURING SHALL CONFIRM ALL SNEEZE GUARDS MEET NSF REQUIREMENTS PRIOR TO FABRICATION AND INSTALLATION OF SNEEZE GUARDS ON SITE. ALL SNEEZE GUARDS SHALL STAY WITHIN MINIMUM NSF REQUIREMENTS TO AVOID EXCESSIVE CUSTOMER REACH TO ACCESS FOOD UNDER SNEEZE GUARDS.

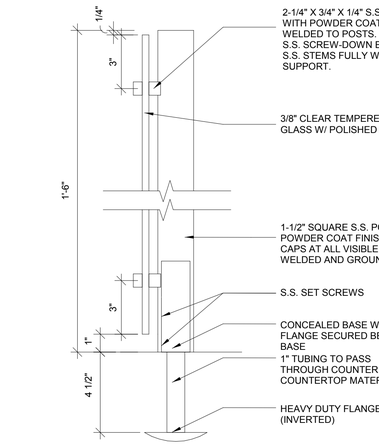

VERTICAL SNEEZE GUARD

F2 72

SCALE: N.T.S.

ITEM NO. 27 - CUSTOM BREAD DISPLAY SHELF IS NO LONGER IN FOODSERVICE EQUIPMENT DRAWINGS. SHELF SHALL BE SPECIFIED BY ARCHITECT.

N

CERTIFICATION:

STATUS: BIDDING AND PERMITTING SET

CONSULTANT:

edm
45 South Main Street
Unionville, Connecticut 06085

REVISIONS:

MARK	DATE:	DESCRIPTION
1	11.30.18	addendum #01

UNIVERSITY OF CONNECTICUT
UNIVERSITY PLANNING DESIGN & CONSTRUCTION
31 LEDOYT ROAD UNIT 3038
STORRS, CONNECTICUT 06269-3038
TELEPHONE: (860) 486-2776
FACSIMILE: (860) 486-3177

PROJECT:

Whitney Dining Hall
1346 Storrs Road
Storrs CT. 06269-3038

PROJECT NO: 201687
WORK ORDER NO:
FILE NAME:
AUTHOR:
DRAFTER:
SCALE: 3" = 1'-0"
PRINT DATE: 11.02.2018
SHEET TITLE: FOODSERVICE MILLWORK DRAWINGS
SHEET:

K4.6

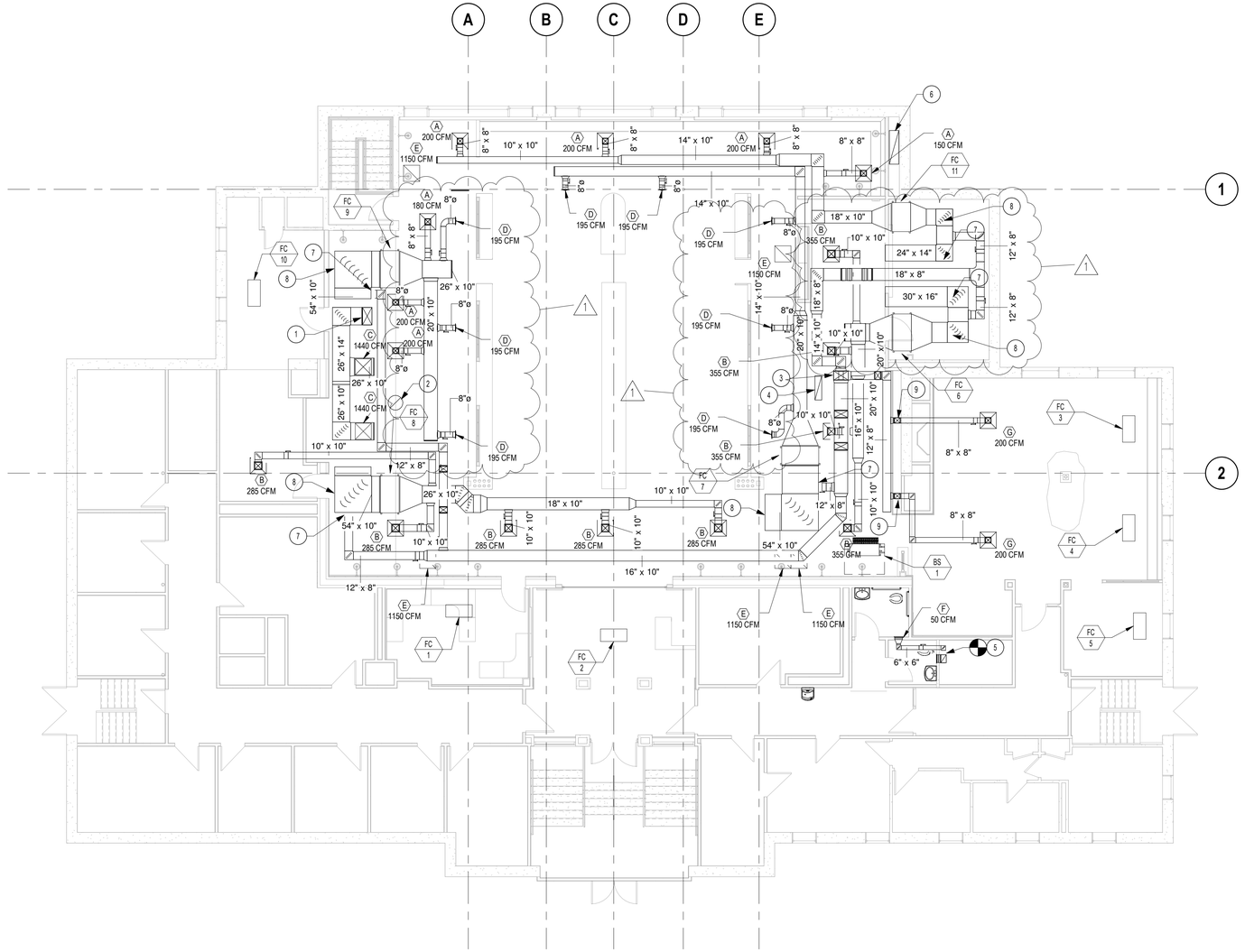

1 first floor ductwork plan

1/8" = 1'-0"

1

RETURN AIR ATTENUATOR MINIMUM REQUIRED DIL VAVUES (Db)								
UNIT	63 Hz	125 Hz	250 Hz	500 Hz	1000 Hz	2000 Hz	4000 Hz	8000 Hz
ERV-1	3	11	13	11	5	5	4	3
EF-2	4	9	17	21	21	21	15	9

GENERAL NOTES:

1. COORDINATE CEILING MOUNTED EQUIPMENT, DIFFUSERS, AND GRILLS WITH ARCHITECTURAL RCP.
2. PROVIDE DUCT LAGGING ON THE SUPPLY AIR DUCT FROM ERV-1. DUCT LAGGING SHOULD CONSIST OF A 1-LB/FT² VINYL NOISE BARRIER WITH REINFORCED FOIL FACING ON ONE SIDE BONDED TO A 1-INCH THICK QUILTED FIBERGLASS WITH NOMINAL DENSITY OF 2.0 LB/FT³, SUCH AS SOUNDSEAL B-10 LAG/QFA-3 OR SIMILAR.

NEW WORK KEYED NOTES:

1. 26x14 MAKE-UP AIR DUCT DOWN FROM MUA-1 ON ROOF.
2. 22" DIA. EXHAUST AIR FROM HOOD TO EF-2 ON ROOF. COORDINATE WITH KITCHEN CONTRACTOR. PROVIDE SOUND ATTENUATOR NEAR THE EXHAUST FAN AIR INLET OPENING. SEE CHART ON THIS SHEET FOR SOUND ATTENUATION SPECS.
3. 22x14 OUTSIDE AIR DUCT DOWN FROM ERV-1.
4. 36x10 EXHAUST AIR DUCT UP TO ERV-1. DUCT TO PULL EXHAUST AIR DIRECTLY FROM PLENUM. PROVIDE SOUND ATTENUATOR NEAR THE ERV EXHAUST AIR INLET OPENING. SEE CHART ON THIS SHEET FOR SOUND ATTENUATION SPECS.
5. PROVIDE CONNECTION TO EXISTING EXHAUST SYSTEM FOR BATHROOM. REBALANCE TO ACCOMODATE NEW BATHROOM ARRANGEMENT.
6. EXISTING 50x14 EXHAUST AIR DUCT UP FROM KITCHEN BELOW TO NEW EXHAUST FAN ON ROOF.
7. CONNECT NEW FRESH AIR DUCT TO RETURN OF DUCTED FAN COIL UNITS. BALANCE TO 350 CFM OF FRESH AIR.
8. PROVIDE 1" ACOUSTIC LINING FOR RETURN DUCTWORK TO FAN COIL.
9. ROUTED FRESH AIR DUCTWORK FOR CAFE DOWN THROUGH CHASE. COORDINATE DUCT ROUTING WITH ARCHITECTURAL AND STRUCTURAL.

N

CERTIFICATION:

STATUS: BIDDING AND PERMITTING SET

CONSULTANT:

edm
45 South Main Street
Unionville, Connecticut 06085

REVISIONS:

MARK	DATE:	DESCRIPTION
1	11.30.18	addendum #01

UNIVERSITY OF CONNECTICUT
UNIVERSITY PLANNING DESIGN & CONSTRUCTION
31 LEDOYT ROAD UNIT 3038
STORRS, CONNECTICUT 06269-3038
TELEPHONE: (860) 486-2776
FACSIMILE: (860) 486-3177

PROJECT:

Whitney Dining Hall
1346 Storrs Road
Storrs CT. 06269-3038

PROJECT NO: 201687
WORK ORDER NO:
FILE NAME:
AUTHOR:
DRAFTER:
SCALE: As indicated
PRINT DATE: 11.02.2018
SHEET TITLE: first floor hvac plan

SHEET:

M-111

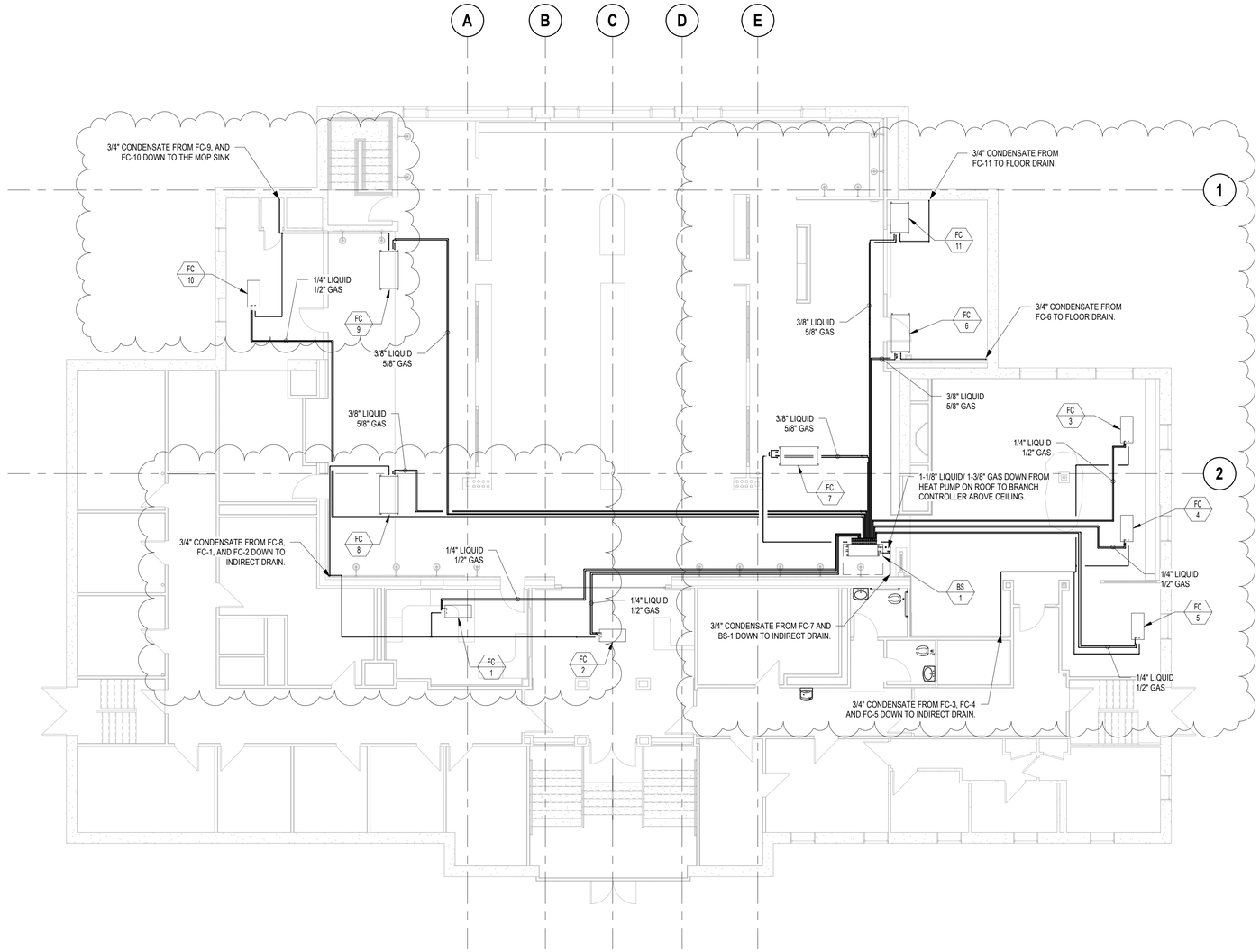

1 first floor HVAC piping plan
1/8" = 1'-0"

N

CERTIFICATION:

STATUS: BIDDING AND PERMITTING SET

CONSULTANT:

edm
45 South Main Street
Unionville, Connecticut 06085

REVISIONS:

MARK	DATE:	DESCRIPTION
1	11.30.18	addendum #01

UNIVERSITY OF CONNECTICUT
UNIVERSITY PLANNING DESIGN & CONSTRUCTION
31 LEDOYT ROAD UNIT 3038
STORRS, CONNECTICUT 06269-3038
TELEPHONE: (860) 486-2776
FACSIMILE: (860) 486-3177

PROJECT:

Whitney Dining Hall
1346 Storrs Road
Storrs CT. 06269-3038

PROJECT NO: 201687
WORK ORDER NO:
FILE NAME:
AUTHOR:
DRAFTER:
SCALE: 1/8" = 1'-0"
PRINT DATE: 11.02.2018
SHEET TITLE: first floor hvac plan

SHEET:

M-112

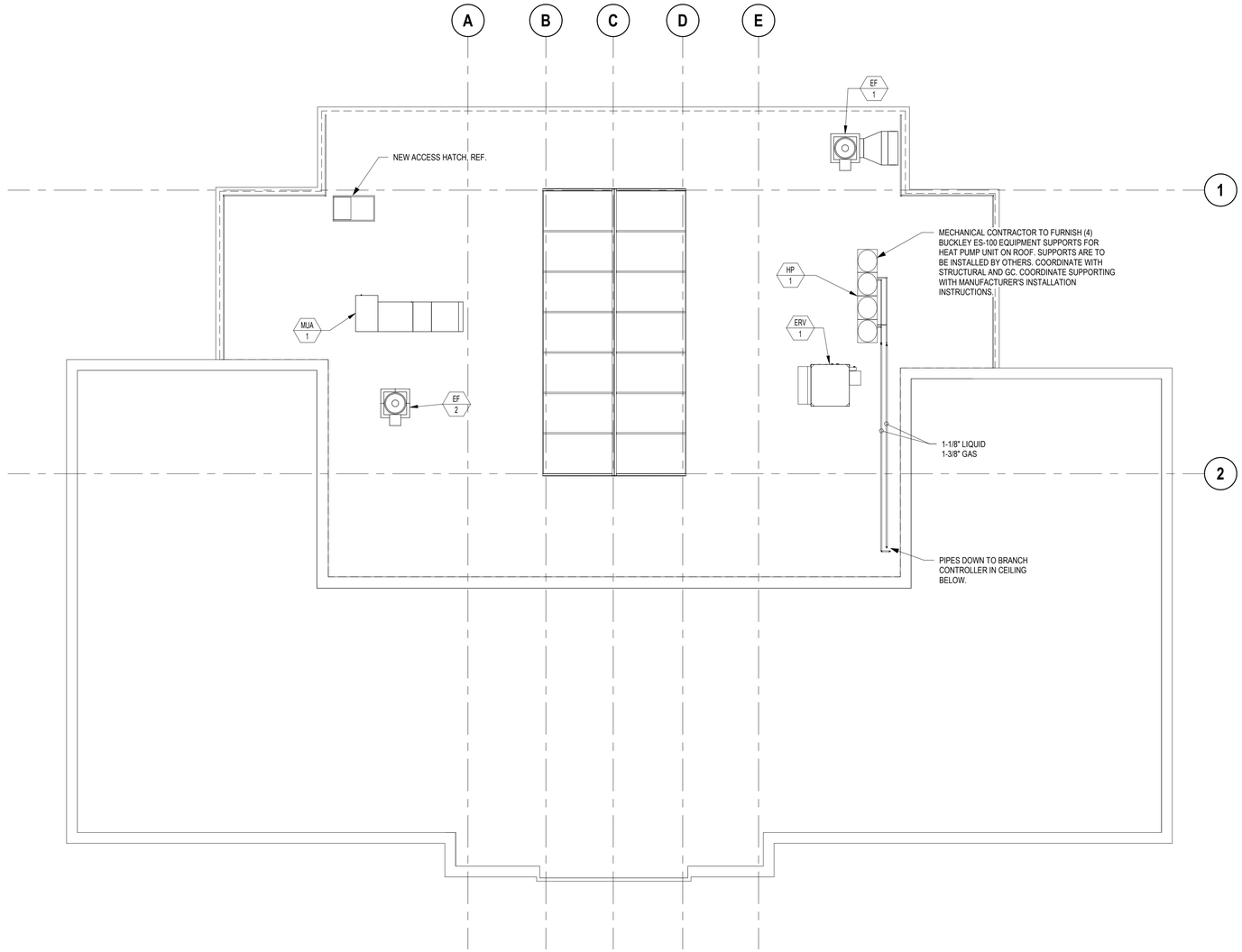

1 roof hvac plan
1/8" = 1'-0"

1

GENERAL NOTES:
1. PROVIDE ALL ROOFTOP EQUIPMENT WITH VIBRATION ISOLATION. VIBRATION ISOLATION FOR ERV-1 TO HAVE A MINIMUM STATIC DEFLECTION OF 1". VIBRATION ISOLATION FOR EF-1, EF-2, MUA-1, AND HP-1 TO HAVE A MINIMUM STATIC DEFLECTION OF 3/4".

N

CERTIFICATION:

STATUS: BIDDING AND PERMITTING SET

CONSULTANT:

edm
45 South Main Street
Unionville, Connecticut 06085

REVISIONS:

MARK	DATE:	DESCRIPTION
1	11.30.18	addendum #01

UNIVERSITY OF CONNECTICUT
UNIVERSITY PLANNING DESIGN & CONSTRUCTION
31 LEDOYT ROAD UNIT 3038
STORRS, CONNECTICUT 06269-3038
TELEPHONE: (860) 486-2776
FACSIMILE: (860) 486-3177

PROJECT:

Whitney Dining Hall
1346 Storrs Road
Storrs CT. 06269-3038

PROJECT NO: 201687
WORK ORDER NO:
FILE NAME:
AUTHOR:
DRAFTER:
SCALE: 1/8" = 1'-0"
PRINT DATE: 11.02.2018
SHEET TITLE: roof hvac plan

SHEET:

M-121

MAKE-UP AIR UNIT

DESIGNATION	SERVICE	LOCATION	MAKE	MODEL	DESIGN CONDITIONS		WINTER (f)	SUPPLY (cfm)	OUTDOOR AIR (cfm)	MIN SUPPLY AIRFLOW (CFM)	UNIT ORIENTATION	UNIT CONFIG.	SUPPLY AIR DISCHARGE	OUTDOOR AIR INTAKE	HEATING TYPE	GAS TYPE	GAS PRESSURE		CAPACITY (MBH)		TEMP. RISE		TURNDOWN	PERFORMANCE		FAN DATA									ELECTRICAL			REMARKS
					DB (f)	WB (f)											MIN (in wg)	MAX (PSI)	INPUT	OUTPUT	MIN (f)	MAX (f)		EAT (f)	LAT (f)	TOTAL VOLUME (cfm)	EXTERNAL SP (in wg)	TOTAL SP (in wg)	RPM	OPERATING POWER (hp)	QTY	TYPE	SIZE (in.)	DRIVE TYPE	VOLTAGE	MCA (A)	MOP (A)	
MUA-1	SERVING STATION	ROOF	GREENHECK	IGX-112-H22	88.3	74.2	-83	2885	2885	1443	HORIZONTAL	VARIABLE	BOTTOM	END	INDIRECT GAS	NATURAL	6	0.5	350	280	5.6	89.9	16:1	-8.3	81.6	2885	0.5	0.685	760	0.84	1	FORWARD CURVED	12	BELT-DRIVEN	208-60-3	7.3	15	1

REMARKS:

(1) PROVIDE WITH PERMATECTOR COATING, DOUBLE WALL CONSTRUCTION, REMOVEABLE LIFT OFF ACCESS PANELS, MICROPROCESSOR CONTROLS, BMS MONITORING AND CONTROL, BMS PROTOCOL-BACnet MSTP, ROOM TEMP CONTROL, VFD, HEATING INLET SENSOR, DIRTY FILTER SWITCH, INLET DAMPER END SWITCH, FREEZE PROTECTION, WEATHERHOOD WITH ALUMINUM MESH, SUPPLY AIR FILTERS, LOW LEAK DAMPER, GPI CURB 24", STAINLESS STEEL HEAT EXCHANGER, EXTERNAL GAS PRESSURE REGULATOR, DDC ASSISTED FURNACE COMMISSIONING

ERV SCHEDULE

DESIGNATION	SERVICE	TYPE	OA CFM	ESP (INWC)	BASIS OF DESIGN			ELECTRICAL		REMARKS
					MAKE	MODEL	WEIGHT LBS.	VOLTS-PH-HZ	MCA	
ERV-1	Whitney Dining	ERV	2516	0.75	RENEWAIRE	HE3XRT	972	208-3-60	21.1	1,2,3,4,5,6,7,8,9

REMARKS:

(1) PROVIDE WITH INTEGRATED PROGRAMMABLE CONTROLS.

(2) PROVIDE WITH DOUBLE WALL CONSTRUCTION.

(3) PROVIDE WITH FACTORY SUPPLIED VFD'S ON BOTH AIR STREAMS

(4) PROVIDE WITH SHAFT GROUNDING RING.

(5) PROVIDE WITH CLASS 1 LOW LEAKAGE MOTORIZED DAMPERS ON BOTH AIRSTREAMS.

(6) PROVIDE WITH FACTORY MOUNTED FILTER ALARMS.

(7) PROVIDE WITH MERV 13 FILTERS.

(8) PROVIDE WITH ROOF CURB AND WIND CLIPS

(9) PROVIDE WITH CARBON DIOXIDE CONTROLS.

EXHAUST FAN SCHEDULE

DESIGNATION	SERVICE	LOCATION	CFM	ESP (IN. WG)	EFFECTIVE PLUME HT. (ft)	TYPE	ELECTRICAL	BASIS OF DESIGN		REMARKS
							VOLTS - PH	MAKE	MODEL	
EF-1	EXISTING FAN REPLACEMENT	ROOF	6,285	1.5	28.52	CENTRIFUGAL ROOF EXHAUST	208 - 3	GREENHECK	VEKTOR-H-30	1
EF-2	HOOD EXHAUST	ROOF	2,855	1.5	30.11	CENTRIFUGAL ROOF EXHAUST	208 - 3	GREENHECK	VEKTOR-H-18	1,2

REMARKS

(1) PROVIDE WITH ROOF CURB AND VIBRATION ISOLATION.

(2) PROVIDE WITH INTEGRATION WITH UCONN EXHAUST FAN MANAGEMENT SYSTEM.

(3) PROVIDE WITH VFD MOTOR, BYPASS AIR PLENUM, LAB COAT COATING, ZEMA-3R TOGGLE, MOTOR COVER

DIFFUSER / GRILL / LOUVER SCHEDULE

DESIGNATION	SERVICE	APPLICATION	MATERIAL	FINISH	TYPE	MODULE SIZE	NECK SIZE	BASIS OF DESIGN		REMARKS
								MAKE	MODEL	
A	SUPPLY	CEILING DIFFUSER	STEEL	B11 WHITE	LAY-IN/SQUARE CONE DIFFUSER	24x24	8	PRICE	SCD	1,2
B	SUPPLY	CEILING DIFFUSER	STEEL	B11 WHITE	LAY-IN/SQUARE CONE DIFFUSER	24x24	12	PRICE	SCD	1,2
C	SUPPLY	CEILING DIFFUSER	STEEL	B11 WHITE	LAY-IN/ADJUSTABLE BLADE	24x24	24x24	PRICE	520L	1,2
D	SUPPLY	NOZZLE DIFFUSER	STEEL	B11 WHITE	AIR NOZZLE DIFFUSER	8	8	PRICE	AND	1,2,4
E	RETURN	CEILING GRILL	ALUMINUM	B11 WHITE	LAY-IN / 45deg EGG CRATE	24x24	24X24	PRICE	80SGG	1,2,3
F	EXHAUST	SURFACE MOUNT	STEEL	B11 WHITE	SURFACE MOUNT	12x8	12x8	PRICE	530L	1,2
G	SUPPLY	CEILING DIFFUSER	STEEL	66 BRUSHED ALUMINUM	LAY-IN/SQUARE CONE DIFFUSER	24x24	8	PRICE	SCD	2,5

REMARKS:

(1) FINISH: STANDARD WHITE

(2) PROVIDE WITH APPROPRIATE TRANSITIONS FROM BRANCH DUCTS TO DIFFUSERS.

(3) PROVIDE WITH RETURN AIR CANOPY MODEL PRICE RAC.

(4) PROVIDE WITH TYPE 1 FASTENING - STRAIGHT HOLES.

(5) FINISH: BRUSHED ALUMINUM

1

CERTIFICATION:

STATUS: BIDDING AND PERMITTING SET

CONSULTANT:

edm
45 South Main Street
Unionville, Connecticut 06085

REVISIONS:

MARK	DATE:	DESCRIPTION
1	11.30.18	addendum #01

UNIVERSITY OF CONNECTICUT
UNIVERSITY PLANNING DESIGN & CONSTRUCTION
31 LEDOYT ROAD UNIT 3038
STORRS, CONNECTICUT 06269-3038
TELEPHONE: (860) 486-2776
FACSIMILE: (860) 486-3177

PROJECT:

Whitney Dining Hall
1346 Storrs Road
Storrs CT. 06269-3038

PROJECT NO: 201687
WORK ORDER NO:
FILE NAME:
AUTHOR:
DRAFTER:
SCALE: 12" = 1'-0"
PRINT DATE: 11.02.2018
SHEET TITLE: mechanical schedules

SHEET: M-302

N

LIGHT FIXTURE SCHEDULE

TYPE	BASIS OF DESIGN	DESCRIPTION	VOLTAGE	LAMPS	REMARKS
A	VISA LIGHTING - CM1005-L35K-H-MVOLT-OBA	PENDANT FIXTURE, OIL RUBBED BRONZE, WHITE OPAL GLASS DIFFUSER, 3500°K, 1% 0-10V DIMMING	120	38W LED	
B	LUMENWERX - V3PERS-HLO-LED-90-750-35-134IN-UNV-D1-1-DMF-W-TES	PERIMETER LED FIXTURE, 90 CRI, 3500°K, 1% 0-10V DIMMING, 750 LM/FT, DRYWALL MUD FLANGE, ADJUSTABLE END SLEEVE	120	31W PER 4' SECTION LED	FIELD VERIFY FINAL LENGTH
C	FOCAL POINT ID+ FLC33D-ST-1500L-120 LD1-T-BH/LC33-ST-1500L-935K-DNS-WFL-CD-WH	3.5" SHALLOW SQUARE LED DOWNLIGHT, FLANGELESS, 90 CRI, 60° BEAM SPREAD, 0-10V DIMMING, NO LENS, WHITE FINISH	120	20W LED	
C1	GOTHAM 2" INCITO ICO SQADJ-35-07-2AR-LD-400-MVOLT-UGZ-TRW-CRI90	2" SQUARE ADJUSTABLE DOWNLIGHT	120	10W LED	
D	BASELITE - SBC14-61-10WLED-WM30-PRT LENSE	LED CONE SHADE, 14" DIAMETER, ANODIZED CHARCOAL FINISH, 45° BRACKET	120	10W LED	
E	LITHONIA EPANL LED EPANL-22-34L-35K	2'X2' LED, 1" DROP SOLID DIFFUSER, STANDARD OUTPUT, 3500°K, 0-10V DIMMING, MATTE SATIN WHITE FINISH	120	31.1W LED	
F	TIVOLI LIGHTSPHERE ADAPT LSA-B-24-V-TBD-TBD-12/JT-240-3-5-12-D, PROVIDE WITH ADNM** POWER SUPPLIES	LED DECORATIVE STRING LIGHTING, SEE PLANS FOR LENGTHS, 24" ON CENTER, 8" DIAMETER ACRYLIC SPHERE, PROVIDE WITH 0-10V DIMMING DRIVERS AS REQUIRED	120	0.48W LED	SEE PLANS FOR LENGTHS, PROVIDE ALL REQUIRED HANGERS FOR LAYOUT AS SHOWN; PROVIDE 5 REPLACEMENT BULBS AND GLOBES
G	LUMENART - ACL100-3500K-UNV-60DEG-WHITE	SURFACE MOUNTED ADJUSTABLE LIGHT, 3500°K, 0-10V DIMMING, WHITE FINISH, 60° OPTICS	120	30W LED	
H	LITHONIA - 2BLT-33LHE-SDSM-GZ1-LP835	2'X2' RECESSED LED BASKET, SQUARE SMOOTH DIFFUSER, 1% 0-10V DIMMING, 80 CRI, 3500°K	120	25W LED	
J	FOCAL POINT ID+ FLC33D-SO-1500L-120 LD1-T-BH/LC33-SO-1500L-935K-DNS-WFL-CD-WH-TS	3.5" SHALLOW SQUARE LED DOWNLIGHT, FLANGED, 90 CRI, 60° BEAM SPREAD, 0-10V DIMMING, NO LENS, SATIN NICKEL FINISH	120	17W LED	
K	BASELITE - SP-PJ1CLCG/XX/ST12/STC/LED	DECORATIVE VAPORTIGHT JAR FIXTURE, 12" STEM & CANOPY, TWO JARS, 3" CLEAR GLASS, LED, 0-10V DIMMING, CUSTOM FIXTURE - SEE DRAWING E-503 FOR DETAIL	120	24W LED	
K1	BASELITE - 8P1CLCG/XX/SPRDTM/CNK/LED	DECORATIVE VAPORTIGHT JAR FIXTURE, SPECIAL MOUNTING, EIGHT JARS, 3" CLEAR GLASS, LED, 0-10V DIMMING, CUSTOM FIXTURE - SEE DRAWING E-503 FOR DETAIL	120	96W LED	
K2	BASELITE - E1CLCG/XX/E16/CB1/2"/LED	DECORATIVE VAPORTIGHT JAR FIXTURE, 10" ARM MOUNT, ONE JAR, 3" CLEAR GLASS, LED, 0-10V DIMMING, CUSTOM FIXTURE - SEE DRAWING E-503 FOR DETAIL	120	12W LED	
K2A	BASELITE - SP-TP1CLCG/XX/STXX/STC/E16/CB1/2"/LED	DECORATIVE VAPORTIGHT JAR FIXTURE, SPECIAL MOUNTING, THREE JARS, 3" CLEAR GLASS, LED, 0-10V DIMMING, CUSTOM FIXTURE - SEE DRAWING E-503 FOR DETAIL	120	36W LED	
L	LITHONIA MNSL-L23-L231LL-120V-GZN-40K-80CRI-M6	2' LED WALL MOUNTED LINEAR STRIP LIGHT, SURFACE MOUNTED ABOVE DOOR, 4000°K, 80CRI, 1150 LUMENS	120	12W LED	A
M	LITHONIA WRTL-G-L24-5000LM-OAW-AFL-MVOLT-EZ1-35K-80CRI-FPA-DWAM	RECESSED 2' X 2' WET LOCATION TROFFER, GRID MOUNTED, OVERLAPPING ALUMINUM WHITE DOOR FRAME, FROSTED ACRYLIC DIFFUSER, 0-10V DIMMING, 3500°K, 80 CRI, ANTI-MICROBIAL PAINT, FOOD PROCESSING AREA OPTION	120	42W LED	
X1	ISOLITE ELT-AC-G-1M-WH-RC-UC-SD	LED EXIT SIGN, RED LETTERING, WHITE BACKGROUND, BRUSHED ALUMINUM HOUSING	120	LED	

NOTES:
1. ALL NECESSARY MOUNTING HARDWARE, HANGERS, BRACKETS, STEMS, CHAINS, ETC. SHALL BE PROVIDED.
2. REFER TO ARCHITECTURAL DRAWINGS FOR MOUNTING HEIGHTS, ARRANGEMENTS, EXACT LOCATIONS, CEILING HEIGHTS, ETC .ALL COLORS AND FINISHES SHALL BE VERIFIED BY THE ARCHITECT.
3. FIXTURES SHALL BE SEISMICALLY SUPPORTED AS REQUIRED BY THE CONNECTICUT STATE BUILDING CODE.

MOTOR CIRCUIT SCHEDULE

EQUIPMENT	SOURCE PANEL	OCP DEVICE	BRANCH CIRCUIT	DISC SW	STARTER	LOAD					REMARKS
						HP/KW	FLA	MCA	PH	VOLT	
MUA	1,3,5,KP3	15A-3P	4#12, #12G, 3/4"C	30A-3P	DIV 23			7.3	3	208	
EF-1	28,30,32,KP3	35A-3P	3#8, #10G, 3/4"C	30A-3P	DIV 23	5			3	208	
EF-2	37,39,41,KP3	35A-3P	3#8, #10G, 3/4"C	30A-3P	DIV 23	5			3	208	
FC-1	36,38,KP3	20A-2P	2#12, #12G, 3/4"C	20A-2P	DIV 23			FRAC	1	208	
FC-2	36,38,KP3	20A-2P	2#12, #12G, 3/4"C	20A-2P	DIV 23			FRAC	1	208	
FC-3	36,38,KP3	20A-2P	2#12, #12G, 3/4"C	20A-2P	DIV 23			FRAC	1	208	
FC-4	36,38,KP3	20A-2P	2#12, #12G, 3/4"C	20A-2P	DIV 23			FRAC	1	208	
FC-5	36,38,KP3	20A-2P	2#12, #12G, 3/4"C	20A-2P	DIV 23			FRAC	1	208	
FC-6	36,38,KP3	20A-2P	2#12, #12G, 3/4"C	20A-2P	DIV 23			FRAC	1	208	
FC-7	36,38,KP3	20A-2P	2#12, #12G, 3/4"C	20A-2P	DIV 23			FRAC	1	208	
FC-8	40,42,KP3	20A-2P	2#12, #12G, 3/4"C	20A-2P	DIV 23			FRAC	1	208	
FC-9	40,42,KP3	20A-2P	2#12, #12G, 3/4"C	20A-2P	DIV 23			FRAC	1	208	
FC-10	40,42,KP3	20A-2P	2#12, #12G, 3/4"C	20A-2P	DIV 23			FRAC	1	208	
FC-11	40,42,KP3	20A-2P	2#12, #12G, 3/4"C	20A-2P	DIV 23			FRAC	1	208	
HP-1 (MODULE 1)	2,4,6,KP3	80A-3P	4#6, #8G, 1"C	100A-3P	DIV 23			52	3	208	
HP-1 (MODULE 2)	8,10,12,KP3	60A-3P	4#6, #10G, 1"C	60A-3P	DIV 23			42	3	208	
ERV-1	7,9,11,KP3	20A-3P	4#12, #12G, 3/4"C	30A-3P	DIV 23		11		3	208	
BS-1	36,38,KP3	20A-2P	2#12, #12G, 3/4"C	20A-2P	DIV 23			FRAC	1	208	
BS-2	40,42,KP3	20A-2P	2#12, #12G, 3/4"C	20A-2P	DIV 23			FRAC	1	208	
CONTROLS	14,KP3	20A-1P	2#12, #12G, 3/4"C	N/A	N/A				1	120	
WH-1	47,KP3	20A-1P	2#12, #12G, 3/4"C	STOL	DIV 23			FRAC	1	120	
HWRP-1	47,KP3	20A-1P	2#12, #12G, 3/4"C	STOL	DIV 23			FRAC	1	120	

NOTES:
1. REFER TO SPECIFICATIONS FOR STANDARD FEATURES. DISCONNECT SWITCHES SHALL BE HEAVY DUTY TYPE.
2. ABBREVIATIONS:
   VFD - VARIABLE FREQUENCY DRIVE.
   COMBO - FULL VOLTAGE NON-REVERSING WITH FUSED PRIMARY AND SECONDARY 120VAC CONTROL TRANSFORMER, HOA IN COVER, (2) FORM C AUXILIARY CONTACTS.
   STOL - THERMAL OVERLOAD SWITCH, PROVIDED BY DIV. 26 CONTRACTOR
   DIV. 23 - EQUIPMENT PROVIDED BY DIV. 23 CONTRACTOR
3. OVERCURRENT PROTECTIVE DEVICE SHALL BE MOLDED CASE CIRCUIT BREAKER UNLESS NOTED WITH AN `F' FOR FUSE.
4. STARTERS SHALL BE SQUARE D CLASS 8536 OR APPROVED EQUAL.
5. STARTERS AND DISCONNECTS LOCATED OUTSIDE SHALL BE NEMA 3R RATED.
6. REFER TO ELECTRICAL AND MECHANICAL PLANS FOR EQUIPMENT LOCATIONS. STARTERS AND DISCONNECTS BY DIV 26 UON.
7. PROVIDE CONNECTION FROM CONDENSATE PUMP TO LOCAL 120V CONVENIENCE RECEPTACLE CIRCUIT FOR THIS UNIT.

MANUFACTURER: TBD — MLO OR MCB: MCB — PANEL: **KP1/2-NEW**
TYPE: PANELBOARD — FEED: T.B.D. — VOLTAGE: 120/208V, 3 Φ, 4 WIRE
MOUNTING: RECESSED — CU OR AL WIRE: CU — MAIN AMPS: 225A MCB
LOCATION: SEE PLANS — AIC RATING: 42,000 AMPS — FEEDER: SEE RISER

NOTES: 1-PROVIDE SHUNT TRIP BREAKER FOR SHUTOFF OF EQUIPMENT UNDER HOOD

CKT NO.	LOAD	KVA	BRKR	PHASE	BRKR	KVA	LOAD	CKT NO.
1	EXISTING CIRCUIT - RELOCATED	0.50	20	A	20	0.60	ITEMS #1 & 5	2
3	EXISTING CIRCUIT - RELOCATED	0.50	20	B	20	1.80	ITEM #2	4
5	EXISTING CIRCUIT - RELOCATED	0.50	20	C	20	1.80	ITEM #3	6
7	EXISTING CIRCUIT - RELOCATED	0.50	20	A	20	1.10	ITEM #4 (TWO CONNECTIONS)	8
9	EXISTING CIRCUIT - RELOCATED	0.50	20	B	20	0.50	ITEM #6 & #16	10
11	EXISTING CIRCUIT - RELOCATED	0.50	20	C	20	0.52	ITEMS #7 & 8	12
13	ITEM #52	0.72	20	A	20	0.36	ITEM #9	14
15	ITEM #54	1.00	20	B	20	1.14	ITEM #9A	16
17	ITEMS #55 & 57	1.00	20	C		1.14	"	18
19	ITEM #56	1.65	20	A	20	1.00	ITEM #9B	20
21	"	1.65		B	20	0.94	ITEM #10	22
23	ITEM #58	1.65	20	C	20	1.00	ITEM #12	24
25	"	1.65		A	20	1.90	ITEM #13	26
27	ITEM #59	0.69	20	B	20	1.20	ITEM #19 (QTY=2)	28
29	ITEMS #60 & 65	0.78	20	C	20	0.12	ITEM #20	30
31	ITEM #66	0.80	20	A	40	3.00	ITEM #21	32
33	ITEMS #67 & 68	1.30	20	B		3.00	"	34
35	ITEM #70	2.65	30	C	20	1.10	ITEM #22	36
37	"	2.65		A	20		SPARE	38
39	ITEM #73	1.42	20	B	20	0.83	ITEM #24	40
41	ITEM #74E	0.60	20	C	20	0.83	ITEM #25	42
43	ITEM #75E	1.10	20	A	20	1.70	ITEM #26	44
45	ITEMS #77 & 84 & 89 & 92	0.50	20	B	20	0.36	ITEM #28	46
47	ITEM #87	0.72	20	C	30	2.20	ITEM #29	48
49	ITEM #88	1.92	20	A		2.20	"	50
51	ITEM #94	0.60	20	B	20	0.64	ITEM #30 - COLD	52
53	ITEM #98E	1.27	20	C	20	0.55	ITEM #30 - HOT	54
55	"	1.27		A		0.55	"	56
57	SPARE		20	B	20	0.69	ITEM #34	58
59	SPARE		20	C	20	0.72	ITEMS #35 & 36	60
61	SPARE		20	A	20	1.40	ITEM #37	62
63	SPARE		20	B	20	1.00	ITEM #40	64
65	SPARE		20	C	20	0.64	ITEM #44 - COLD	66
67	SPARE		20	A	20	1.10	ITEM #44 - HOT	68
69	SPARE		20	B		1.10	"	70
71	SPARE		20	C	20	0.85	ITEM #45	72
73	SPARE		20	A	20	1.50	ITEM #46A - SEE NOTE 1**	74
75	SPARE		20	B	20	1.00	ITEM #48	76
77	SPARE		20	C	20	0.89	ITEM #49	78
79	SPARE		20	A	20		SPARE	80
81	SPARE		20	B	20		SPARE	82
83	SPARE		20	C	20	0.85	ITEM #50	84

MANUFACTURER: TBD — MLO OR MCB: MCB — PANEL: **KP3**
TYPE: PANELBOARD — FEED: T.B.D. — VOLTAGE: 120/208V, 3 Φ, 4 WIRE
MOUNTING: RECESSED — CU OR AL WIRE: CU — MAIN AMPS: 225A MCB
LOCATION: SEE PLANS — AIC RATING: 42,000 AMPS — FEEDER: SEE RISER

BREAKER OPTIONS:

CKT NO.	LOAD	KVA	BRKR	PHASE	BRKR	KVA	LOAD	CKT NO.
1	MAKEUP AIR UNIT MAU	0.75	15	A	80	5.20	HP-1 (MODULE 1)	2
3	"	0.75	-	B	-	5.20	"	4
5	"	0.75	-	C	-	5.20	"	6
7	ERV-1	1.32	20	A	60	4.20	HP-1 (MODULE 2)	8
9	"	1.32	-	B	-	4.20	"	10
11	"	1.32	-	C	-	4.20	"	12
13	CONVENIENCE OUTLETS	1.44	20	A	20	0.10	HVAC CONTROLS	14
15	CONVENIENCE OUTLETS	1.08	20	B	20	0.00	SPARE	16
17	CONVENIENCE OUTLETS	1.08	20	C	20	0.83	LIGHTING	18
19	FIREPLACE & DOOR ALARM	0.25	20	A	20	0.92	LIGHTING	20
21	CONVENIENCE OUTLETS	1.26	20	B	20	1.00	DUMBWAITER	22
23	CONVENIENCE OUTLETS	1.44	20	C	-	1.00	"	24
25	CONVENIENCE OUTLETS	1.08	20	A	-	1.00	"	26
27	CONVENIENCE OUTLETS	0.72	20	B	35	2.10	EF-1	28
29	CONVENIENCE OUTLETS	1.08	20	C	-	2.10	"	30
31	PLANTER OUTLETS	0.40	20	A	-	2.10	"	32
33	DOOR OPERATOR & OUTLET	0.30	20	B	20	0.99	LIGHTING	34
35	CONVENIENCE OUTLETS	1.26	20	C	-	1.10	FC's & BC's	36
37	EF-2	2.10	35	A	20	1.10	"	38
39	"	2.10	-	B	-	1.10	FC's & BC's	40
41	"	2.10	-	C	20	1.10	"	42
43	ELECTRIC WATER COOLER	0.72	20	A	20	0.20	LIGHTING CTRL PANEL & AMP	44
45	ROOF MTD JIB CRANE OUTLET	0.50	20	B	20		SPARE	46
47	WH-1 & HWRP-1	0.40	20	C	20		SPARE	48
49	SPARE		20	A	20		SPARE	50
51	SPARE		20	B	20		SPARE	52
53	SPARE		20	C	20		SPARE	54

N

CERTIFICATION:

STATUS: BIDDING AND PERMITTING SET

CONSULTANT:

edm
45 South Main Street
Unionville, Connecticut 06085

REVISIONS:

MARK	DATE	DESCRIPTION
1	11.30.18	addendum #01

UNIVERSITY OF CONNECTICUT
UNIVERSITY PLANNING DESIGN & CONSTRUCTION
31 LEDOYT ROAD UNIT 3038
STORRS, CONNECTICUT 06269-3038
TELEPHONE: (860) 486-2776
FACSIMILE: (860) 486-3177

PROJECT:

Whitney Dining Hall
1346 Storrs Road
Storrs CT. 06269-3038

PROJECT NO: 201687
WORK ORDER NO:
FILE NAME:

AUTHOR: SG
DRAFTER: KP
SCALE: 1/4" = 1'-0"
PRINT DATE: 11.02.18
SHEET TITLE: electrical schedules

SHEET: E-501

key notes:

1. ALL FIXTURES MARKED "EM" SHALL BE POWERED FROM EXISTING EMERGENCY LIGHTING PANEL IN BASEMENT MAIN ELECTRICAL ROOM, THROUGH UL924 BY PASS RELAYS. SEE 4+ 5/E-602
2. FIXTURES IN THIS AREA DIRECTLY REPLACE EXISTING FIXTURES. RECONNECT TO EXISTING POWER SOURCE. AND ADD EMERGENCY CIRCUIT WITH BYPASS RELAY.
3. CONNECT TO EXISTING LIGHTING CIRCUIT IN THE AREA THAT FED DEMOLISHED FIXTURES
4. SENSOR SWITCHES SHALL BE VACANCY TYPE (MANUAL, ON AUTO OFF), EXCEPT IN BATHROOMS, WHICH WILL BE AUTO ON, AUTO OFF
5. CONCEAL ALL WIRING. PATCH CEILING IN THIS AREA AFTER COMPLETION OF WORK.
6. REFER TO ARCHITECTURAL PLANS FOR RACEWAY ROUTING TO LIGHT FIXTURES IN THIS AREA.

general notes:

A. SECURITY RENOVATIONS, WHICH ARE PART OF A SEPARATE PROJECT, WILL OCCUR WITHIN THIS RENOVATED AREA. CONTRACTOR SHALL COORDINATE INSTALLATION OF SECURITY DEVICES WITH SECURITY CONTRACTOR PRIOR TO START OF WORK. THIS INCLUDES PROTECTION OF DEVICES, CONDUIT AND ASSOCIATED WIRING DURING DEMOLITION / CONSTRUCTION ACTIVITY TAKING PLACE AS PART OF THIS PROJECT. IF THE CONTRACTOR DAMAGES ANY PART OF THE NEW SECURITY SYSTEM, THEY WILL BE RESPONSIBLE FOR REPAIR/REPLACEMENT OF SAID ITEM.

BUTTON #	BUTTON NAME	ZONES CONTROLLED	ABILITY TO DIM UP/DOWN?
1	MASTER ON/OFF - ALL FIXTURES, ALL AREAS	ALL ZONES	YES
2	DINING AREA - ALL FIXTURES	4, 5, 6, 7, 8, 10, 11, 13, 14	YES
2	CAFÉ AREA - ALL FIXTURES	1, 2, 3, 12	YES
3	DECORATIVE WALL FIXTURES - DINING	9, 10, 11	YES
4	ACTION AREA ONLY	8	YES
5	CENTER DINING AREA	5, 6, 14	YES
6	CUSTOM SCENE T.B.D. BY OWNER DURING PROGRAMMING	T.B.D.	T.B.D.
7	CUSTOM SCENE T.B.D. BY OWNER DURING PROGRAMMING	T.B.D.	T.B.D.
8	CUSTOM SCENE T.B.D. BY OWNER DURING PROGRAMMING	T.B.D.	T.B.D.

2 EL-101 DIGITAL TOUCHSCREEN BUTTON CONTROL SCHEDULE
NTS

RELAY #	FIXTURES CONTROLLED	TIME CONTROL?	STATUS INDICATOR LIGHT?	DAYLIGHT HARVEST?	MOTION SENSOR CONTROL?	CIRCUIT #	DIMMING TYPE
1	TYPE 'J' CAFÉ FIXTURES (DAYLIGHT HARV)	NO	YES	YES	YES	18,KP3	0-10V
2	CAFÉ GENERAL AREA	NO	YES	NO	YES	18,KP3	0-10V
3	CAFÉ AREA NOOK	NO	YES	YES	YES	18,KP3	0-10V
4	TYPE 'E' FIXTURES (DAYLIGHT HARV)	NO	YES	YES	YES	18,KP3	0-10V
5	TYPE 'F' FIXTURES	NO	YES	NO	YES	18,KP3	0-10V
6	TYPE 'G' FIXTURES DINING AREA 1	NO	YES	YES	YES	18,KP3	0-10V
7	TYPE 'E' FIXTURES	NO	YES	NO	YES	20,KP3	0-10V
8	ACTION AREA	NO	YES	NO	YES	20,KP3	0-10V
9	TYPE 'L' FIXTURES DINING	NO	YES	NO	YES	20,KP3	0-10V
10	TYPE 'D' FIXTURES	NO	YES	NO	YES	34,KP3	0-10V
11	TYPE 'D' FIXTURES (DAYLIGHT HARV)	NO	YES	YES	YES	34,KP3	0-10V
12	TYPE 'L' FIXTURES CAFÉ	NO	YES	NO	YES	34,KP3	0-10V
13	TYPE 'C1' FIXTURES DINING	NO	YES	NO	YES	18,KP3	0-10V
14	TYPE 'G' FIXTURES DINING AREA 2	NO	YES	YES	YES	18,KP3	0-10V
15	SPARE						
16	SPARE						

3 EL-101 LIGHTING CONTROL PANEL ZONES
NTS

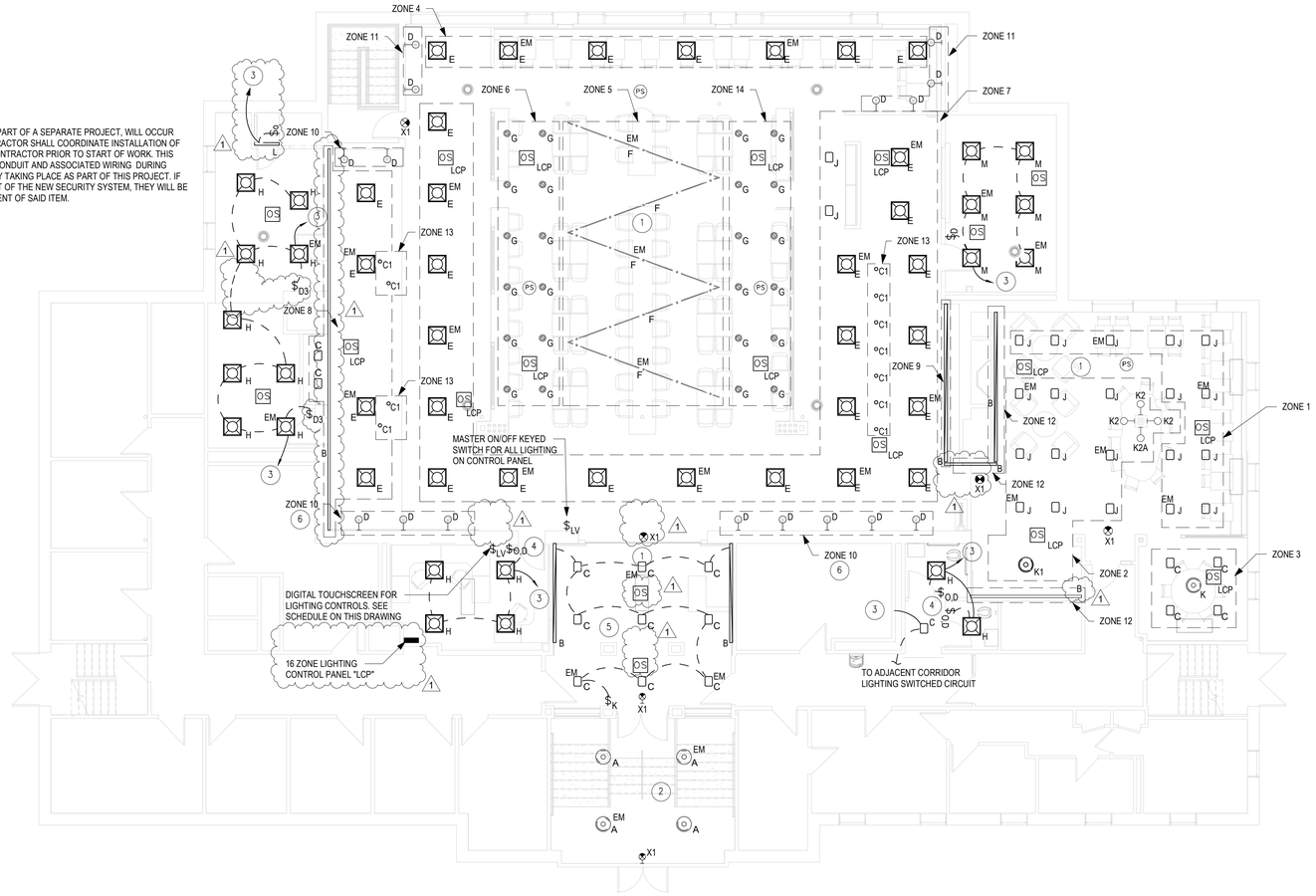

1 EL-101 Level 1
1/8" = 1'-0"

CERTIFICATION:

STATUS: BIDDING AND PERMITTING SET

CONSULTANT:

edm
45 South Main Street
Unionville, Connecticut 06085

REVISIONS:

MARK	DATE	DESCRIPTION
1	11.16.18	addendum #01

UNIVERSITY OF CONNECTICUT
UNIVERSITY PLANNING DESIGN & CONSTRUCTION
31 LEDYOT ROAD UNIT 3038
STORRS, CONNECTICUT 06269-3038
TELEPHONE: (860) 486-2776
FACSIMILE: (860) 486-3177

PROJECT:

Whitney Dining Hall
1346 Storrs Road
Storrs CT. 06269-3038

PROJECT NO: 201687
WORK ORDER NO:
FILE NAME:
AUTHOR: SG
DRAFTER: KP
SCALE: As indicated
PRINT DATE: 11.02.18
SHEET TITLE: first floor electrical lighting plan
SHEET: EL-101

N

key notes:

1. POWER FED THROUGH FLOOR TO OUTLETS IN THIS LOCATION. OUTLETS MOUNTED BELOW COUNTER, TO FACE OF TABLE.
2. POWER FED TO RECEPTACLES FOR PLANTING SHELVES IN THIS LOCATION. PROVIDE A TIMER FOR ONE OF THE DUPLEX RECEPTACLES.
3. POWER FED THROUGH WALL TO OUTLETS IN THIS LOCATION. OUTLETS MOUNTED BELOW COUNTER, TO FACE OF BANQUETTE SEATING.
4. ELECTRICAL ROOM BELOW. STAIRS CONTAINING EXISTING MAIN DISTRIBUTION PANEL.
5. REFER TO HVAC PLANS FOR LOCATION OF EQUIPMENT IN BASEMENT
6. RECONNECT EXISTING 20A-3P CIRCUIT TO NEW DUMBWAITER. PROVIDE NEW 20A-3P DISCONNECT SWITCH. REFER TO ARCHITECTURAL PLANS FOR LOCATION OF DISCONNECT SWITCH.
7. COORDINATE TV MOUNTING HEIGHT WITH ARCHITECT
8. PROVIDE STAINLESS STEEL ENCLOSURES FOR PANEL BOARDS.
9. PROVIDE 120V CONNECTIONS WIRING + RACEWAYS FOR POWERED DOOR + DOOR OPERATORS
10. RECEPTACLES FOR FOOD SERVICE EQUIPMENT IN THIS AREA TO BE LOCATED BELOW COUNTER WITH GROMMETS IN COUNTER TO ALLOW FOR WIRING TO EQUIPMENT ABOVE.
11. PROVIDE SHUNT TRIP BREAKER FOR ITEM #46A, TO BE TRIPPED UPON ACTIVATION OF FIRE SUPPRESSION SYSTEM. PROVIDE 120V CONNECTION TO SHUNT TRIP BREAKER FROM NEAREST 120V CIRCUIT. SEE 7/E-602.
12. UTILIZE EXISTING PATHWAYS WITHIN BLOCK WALL TO CONCEAL NEW WIRING AS MUCH AS POSSIBLE
13. PROVIDE ALL WIRING, RACEWAYS, BREAKERS, DISCONNECT SWITCHES, JUNCTION BOXES, RECEPTACLES AND CONNECTIONS FOR FOOD SERVICE EQUIPMENT IN THESE AREAS. REFER TO FOOD SERVICE DRAWINGS FOR EQUIPMENT LOCATIONS. REFER TO DRAWING E-502 FOR ELECTRICAL REQUIREMENTS.
14. RUN WIRING CONCEALED WITH THE COLUMN IN THIS AREA
15. CONCEAL CONNECTION IN CAVITY
16. PROVIDE CONNECTION TO HVAC CONTROLS (CIRCUIT #14,KP3). COORDINATE EXACT LOCATION OF CONNECTION WITH DIVISION 23.
17. PROVIDE DUPLEX RECEPTACLE FOR SOUND SYSTEM. COORDINATE EXACT LOCATION WITH LOW VOLTAGE CONTRACTOR.
18. PROVIDE RECEPTACLE + ROOF MOUNTED STANCHION FOR RECEPTACLE MOUNTING. RECEPTACLE IS FOR JIB CRANE LOCATED ON ROOF.

general notes:

A. SECURITY RENOVATIONS, WHICH ARE PART OF A SEPARATE PROJECT, WILL OCCUR WITHIN THIS RENOVATED AREA. CONTRACTOR SHALL COORDINATE INSTALLATION OF SECURITY DEVICES WITH SECURITY CONTRACTOR PRIOR TO START OF WORK. THIS INCLUDES PROTECTION OF DEVICES, CONDUIT AND ASSOCIATED WIRING DURING DEMOLITION / CONSTRUCTION ACTIVITY TAKING PLACE AS PART OF THIS PROJECT. IF THE CONTRACTOR DAMAGES ANY PART OF THE NEW SECURITY SYSTEM, THEY WILL BE RESPONSIBLE FOR REPAIR/REPLACEMENT OF SAID ITEM.

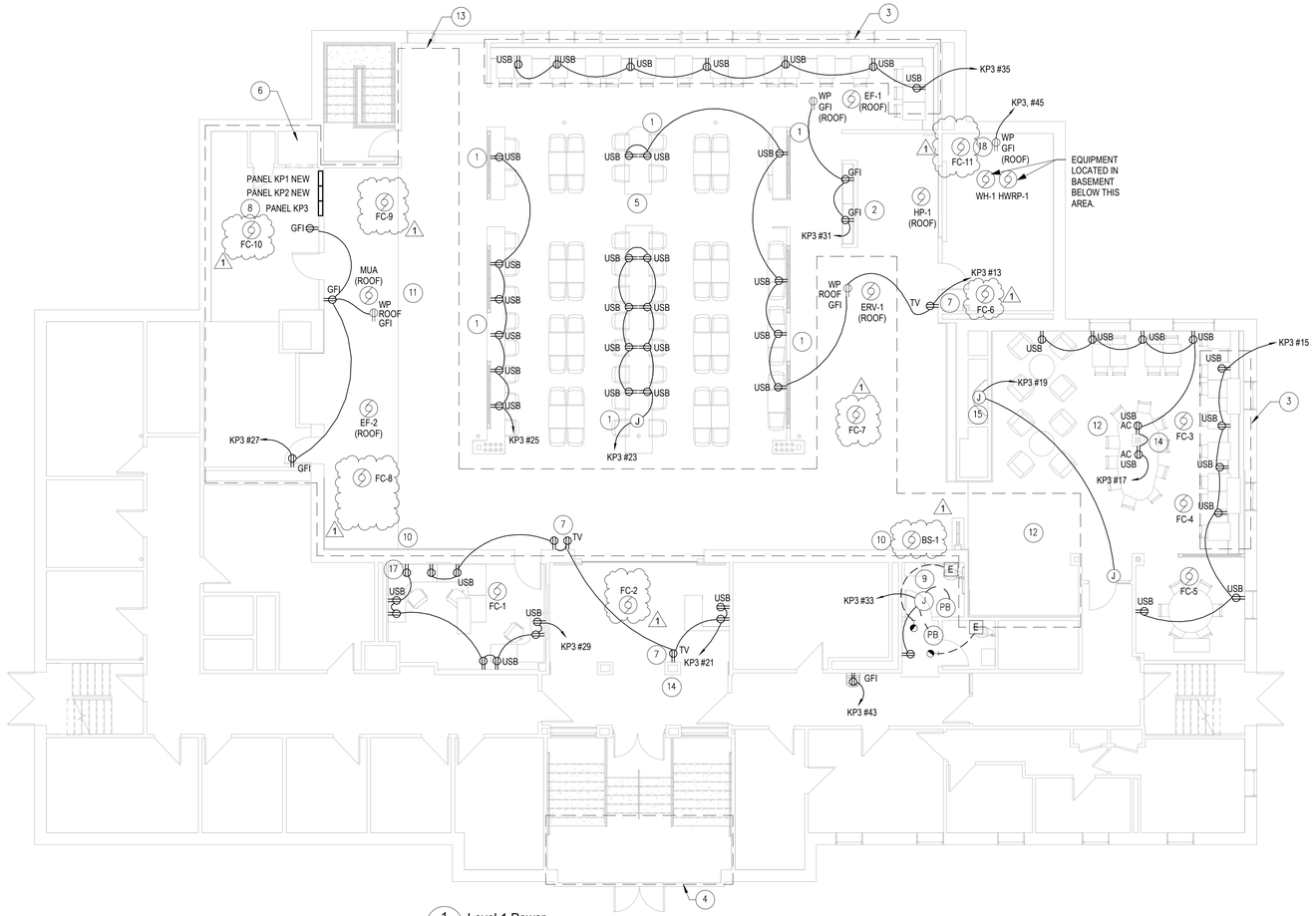

1 EP-101 Level 1 Power
1/8" = 1'-0"

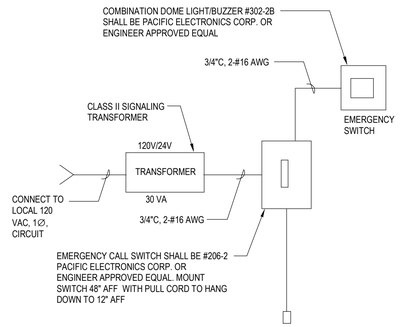

2 EP-101 CALL FOR AID
NTS

N

CERTIFICATION:

STATUS: BIDDING AND PERMITTING SET

CONSULTANT:

edm
45 South Main Street
Unionville, Connecticut 06085

REVISIONS:

MARK	DATE	DESCRIPTION
1	11.30.18	addendum #01

UNIVERSITY OF CONNECTICUT
UNIVERSITY PLANNING DESIGN & CONSTRUCTION
31 LEDOYT ROAD UNIT 3038
STORRS, CONNECTICUT 06269-3038
TELEPHONE: (860) 486-2776
FACSIMILE: (860) 486-3177

PROJECT:

Whitney Dining Hall
1346 Storrs Road
Storrs CT. 06269-3038

PROJECT NO: 201687
WORK ORDER NO:
FILE NAME:
AUTHOR: SG
DRAFTER: KP
SCALE: As indicated
PRINT DATE: 11.02.18
SHEET TITLE: first floor power plan

SHEET: EP-101

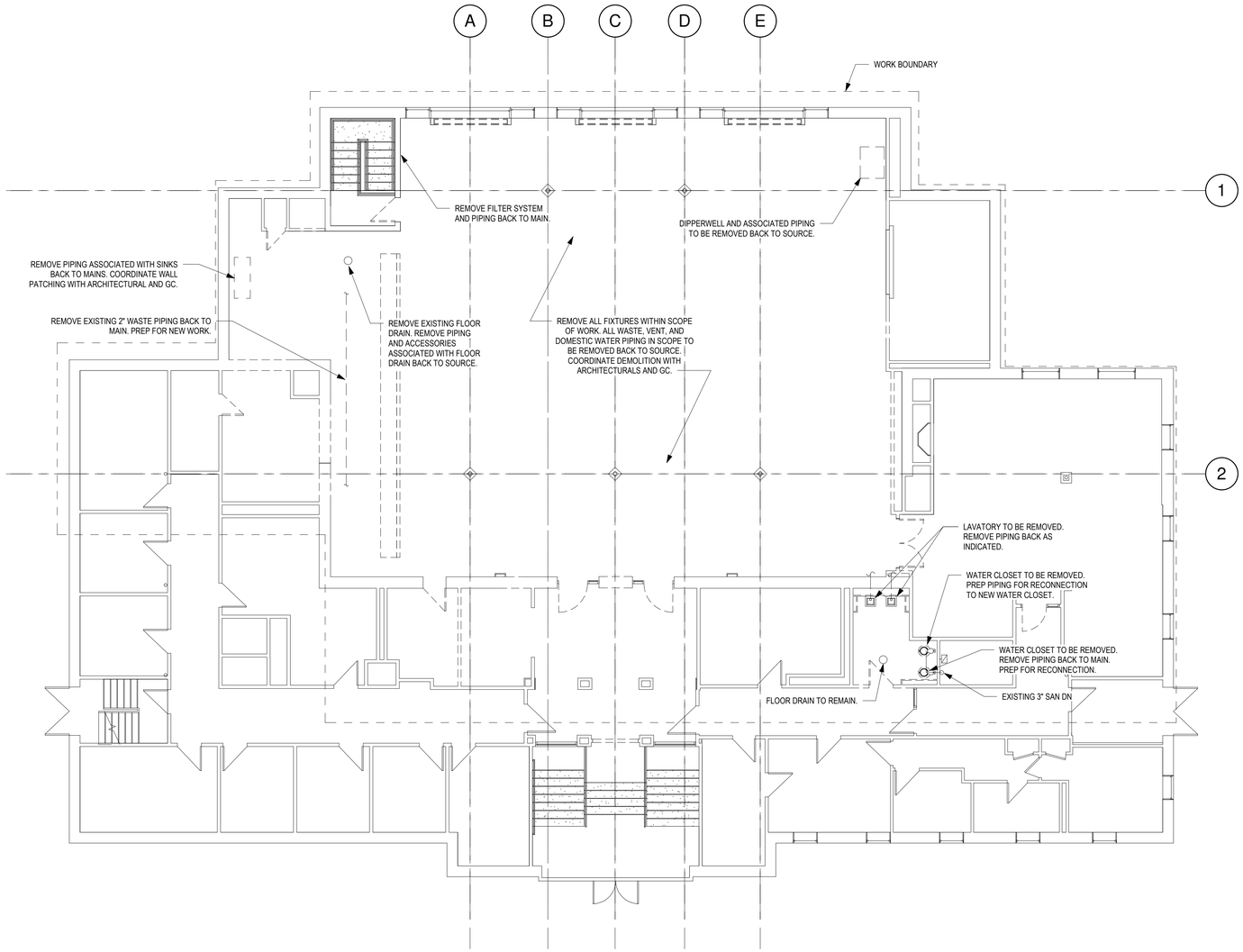

1 plumbing demo plan
1/8" = 1'-0"

GENERAL NOTES
1. WHERE ANY DEVICE OR EQUIPMENT HAS BEEN REMOVED FROM AN EXISTING WALL TO REMAIN, CONTRACTOR TO PATCH THAT WALL SO THAT IT MATCHES THE EXISTING ADJACENT CONSTRUCTION

N

CERTIFICATION:

STATUS: BIDDING AND PERMITTING SET

CONSULTANT:

edm
45 South Main Street
Unionville, Connecticut 06085

REVISIONS:

MARK	DATE:	DESCRIPTION
1	11.30.18	addendum #01

UNIVERSITY OF CONNECTICUT
UNIVERSITY PLANNING DESIGN & CONSTRUCTION
31 LEDOYT ROAD UNIT 3038
STORRS, CONNECTICUT 06269-3038
TELEPHONE: (860) 486-2776
FACSIMILE: (860) 486-3177

PROJECT:

Whitney Dining Hall
1346 Storrs Road
Storrs CT. 06269-3038

PROJECT NO: 201687
WORK ORDER NO:
FILE NAME:
AUTHOR:
DRAFTER:
SCALE: 1/8" = 1'-0"
PRINT DATE: 11.02.2018
SHEET TITLE: Plumbing Demo Plan
SHEET: PD-101

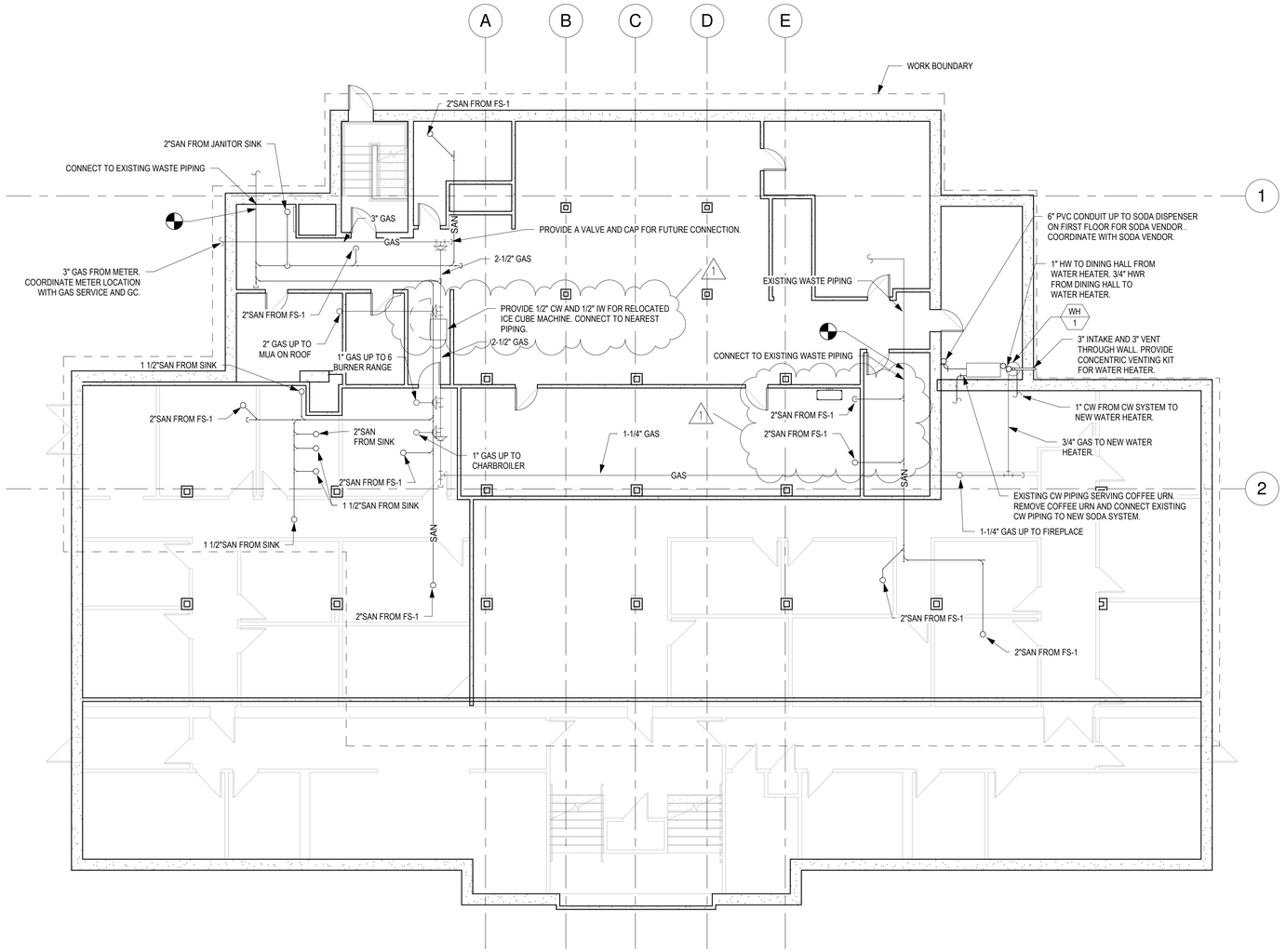

1 plumbing basement plan
1/8" = 1'-0"

GENERAL NOTES

1. COORDINATE ALL PIPING FOR KITCHEN EQUIPMENT WITH KITCHEN CONTRACTOR. VERIFY PIPE SIZES AND CONNECTIONS WITH KITCHEN CONTRACTOR.
2. KITCHEN CONTRACTOR TO PROVIDE & INSTALL ALL KITCHEN EQUIPMENT. PLUMBING CONTRACTOR TO PROVIDE CONNECTIONS.
3. COORDINATE ECOWALL WITH GC.
4. COORDINATE 6" PVC CONDUIT WITH SODA VENDOR.

N

CERTIFICATION:

STATUS: BIDDING AND PERMITTING SET

CONSULTANT:

edm
45 South Main Street
Unionville, Connecticut 06085

REVISIONS:

MARK	DATE:	DESCRIPTION
1	11.30.18	addendum #01

UNIVERSITY OF CONNECTICUT
UNIVERSITY PLANNING DESIGN & CONSTRUCTION
31 LEDOYT ROAD UNIT 3038
STORRS, CONNECTICUT 06269-3038
TELEPHONE: (860) 486-2776
FACSIMILE: (860) 486-3177

PROJECT:

Whitney Dining Hall
1346 Storrs Road
Storrs CT. 06269-3038

PROJECT NO: 201687
WORK ORDER NO:
FILE NAME:
AUTHOR:
DRAFTER:
SCALE: 1/8" = 1'-0"
PRINT DATE: 11.02.2018
SHEET TITLE: Plumbing Basement Plan
SHEET: P-101

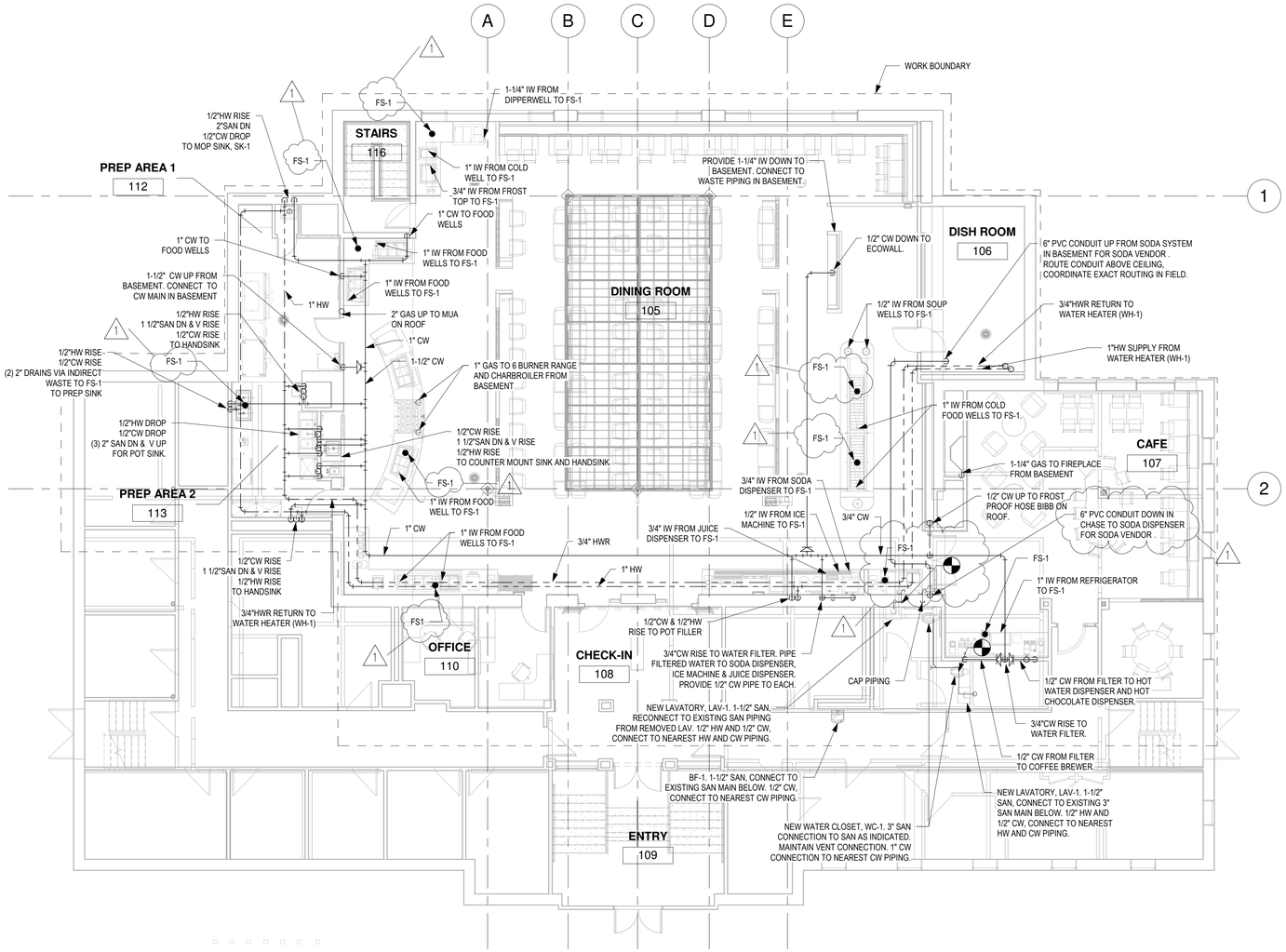

1 plumbing first floor plan

1/8" = 1'-0"

1

GENERAL NOTES

1. COORDINATE ALL PIPING FOR KITCHEN EQUIPMENT WITH KITCHEN CONTRACTOR. VERIFY PIPE SIZES AND CONNECTIONS WITH KITCHEN CONTRACTOR.
2. KITCHEN CONTRACTOR TO PROVIDE & INSTALL ALL KITCHEN EQUIPMENT. PLUMBING CONTRACTOR TO PROVIDE CONNECTIONS.
3. COORDINATE ECOWALL WITH GC.
4. COORDINATE 6" PVC CONDUIT WITH SODA VENDOR.
5. CONDENSATE PIPING FROM FAN COIL UNITS TO BE PUMPED TO NEAREST ACCESSIBLE INDIRECT DRAIN. COORDINATE CONDENSATE PIPING WITH MECHANICAL CONTRACTOR.
6. EXTEND ALL EXISTING VENT PIPING AT ROOF. VENT PIPING TO BE EXTENDED TO ACCOMMODATE NEW ROOF.

N

CERTIFICATION:

STATUS: BIDDING AND PERMITTING SET

CONSULTANT:

edm
45 South Main Street
Unionville, Connecticut 06085

REVISIONS:

MARK	DATE:	DESCRIPTION
1	11.30.18	addendum #01

UNIVERSITY OF CONNECTICUT
UNIVERSITY PLANNING DESIGN & CONSTRUCTION
31 LEDOYT ROAD UNIT 3038
STORRS, CONNECTICUT 06269-3038
TELEPHONE: (860) 486-2776
FACSIMILE: (860) 486-3177

PROJECT:

Whitney Dining Hall
1346 Storrs Road
Storrs CT. 06269-3038

PROJECT NO: 201687
WORK ORDER NO:
FILE NAME:
AUTHOR:
DRAFTER:
SCALE: 1/8" = 1'-0"
PRINT DATE: 11.02.2018
SHEET TITLE: Plumbing First Floor Plan
SHEET: P-111

PLUMBING FIXTURE SCHEDULE

TAG	FIXTURE	MANF.	MODEL	ACCESSORIES			DESCRIPTION	CONNECTIONS					FLOW	FINISH	REMARK
				TYPE	MANF.	MODEL		TRAP	WASTE	VENT	C.W.	H.W.			
BF-1	BOTTLE FILLER/ DRINKING FOUNTAIN	ELKAY	LZS8WSLK	N/A	N/A	N/A	ADA-COMPLIANT, WATER COOLER W/ BOTTLE FILLER STATION, SHALL INCLUDE REPLACEMENT FILTER MODEL NO. 51300C	1-1/2"	1-1/2"	1-1/2"	1/2"	--	8 GPH / 1.1 GPM	STAINLESS STEEL	1,2
LAV-1	LAVATORY	KOHLER	K-2035-1	FAUCET	TOTO	TEL113-D20EM	22"x18", WALL MOUNT, VITREOUS CHINA, ADA-COMPLIANT, PROVIDE WITH SINK SHROUD, DECK MOUNTED SINGLE HOLE ELECTRONIC FAUCET, SELF-GENERATING HYDROPOWERED FAUCET, PROVIDE WITH HELIX SPOUT KIT AND MIXING VALVE.	1-1/2"	1-1/4"	1-1/4"	1/2"	1/2"	.35 GPM	WHITE	1,2
MS-1	MOP SINK	FIAT	MSB-2424	FAUCET	FIAT	830-AA	24"x24"x10", MOLDED STONE BASIN, FLOOR MOUNT, PROVIDE WITH HOSE AND HOSE BRACKET (832-AA), MOP HANGER (889-CC), SILICONE SEALANT (833-AA), STAINLESS STEEL BUMPERGUARD (E-88-AA), AND STAINLESS STEEL WALL GUARDS.	2"	2"	1-1/2"	1/2"	1/2"	2 GPM	STONE	1,2
WC-1	WATER CLOSET	KOHLER	K-96057-L	FLUSH VALVE	TOTO	TET6UA	FLOOR-MOUNT, VITREOUS CHINA ,ELONGATED BOWL, ADA-COMPLIANT, SHALL COMPLY WITH EPA WATER SENSE STANDARDS, SHALL COMPLY WITH ASME A112.19.2, PROVIDE WITH SEAT, SELF-POWERED HYDROELECTRIC FLUSH VALVE SYSTEM	INTEGRAL	3"	2"	1/2"	--	1 GPF	WHITE	1,2
FS-1	FLOOR SINK	MIFAB	FS1730-TB	N/A	N/A	N/A	12"x12"x8", FLOOR AREA AND INDIRECT SANITARY WASTE DRAIN, DEEP CAST IRON, WHITE ACID RESISTANT PORCELAIN ENAMEL COATED INTERIOR, LOOSE GRATE SET, 1/2 GRATE, ANTI-SPLASH ALUMINUM DOME STRAINER	2"	2"	1-1/2"	1/2"	--	N/A	CAST IRON	1,2,3

REMARKS:

(1) VERIFY SUBMITTALS BEFORE INSTALLATION.

(2) VERIFY COLOR/FINISH WITH ARCHITECT/OWNER

(3) FLOOR SINKS TO BE PROVIDED WITH TRAP PRIMER CONNECTION.

DOMESTIC WATER HEATER SCHEDULE

DESIGNATION	MANUFACTURER	MODEL	NOMINAL WATER VOL. (GAL.)	THERMAL EFFICIENCY (%)	INPUT (BTUH)	MIN. GAS PRESSURE (IN WG)	GPH @ 90°F RISE	STORAGE TEMP. (°F)	REMARKS
WH-1	BRADFORD WHITE	EF-60T-125E-3N	60	96	125,000	7	162	140	

REMARKS:

DOMESTIC WATER PUMP SCHEDULE

DESIGNATION	MANUFACTURER	MODEL	MAX. FLOW (GPM)	MAX. HEAD (FT.)	MAX. OPERATING PRESSURE (PSI)	ELECTRICAL		REMARKS
						VOLTS-PH-HZ	MAX. AMPS	
P-1	TACO	1816	16	18	125	120-1-60	0.54	1,2

REMARKS:

(1) PUMP TO BE RATED FOR POTABLE WATER.

(2) PUMP TO BE SUPPLIED WITH ECM MOTOR.

EXPANSION TANKS

DESIGNATION	LOCATION	SERVICE	VOLUME	CONNECTION	DESCRIPTION	MAKE	MODEL	REMARKS
EXP-1	BASEMENT	DOMESTIC HOT WATER	8 GAL.	3/4" NPT	EXPANSION TANK	TACO	PAX-30	1

REMARKS:

(1) EXPANSION TANK TO BE RATED FOR POTABLE WATER.

MIXING VALVE SCHEDULE

DESIGNATION	LOCATION	SERVICE	MAX. TEMP. (°F)	MAX. PRESSURE (PSI)	MIN. FLOW (GPM)	MAKE	MODEL	REMARKS
MV-1	BASEMENT	DOMESTIC HOT WATER	110	150	0.5	WATTS	LF1170	1

REMARKS:

(1)MIXING VALVE TO BE RATED FOR POTABLE WATER.

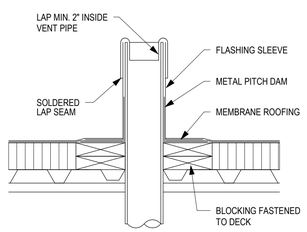

DETAIL FOR GENERAL PURPOSE ONLY, REFER TO ARCHITECTURAL DRAWINGS FOR FLASHING DETAILS

Note:

REFER TO PLANS FOR VTR PIPE SIZES & SUGGESTED LOCATIONS. LOCATE VTR MIN 10' HORIZONTAL FROM, OR 3' VERTICAL FROM ANY BUILDING OPENING OR FRESH AIR INTAKE, 1' FROM ANY VERTICAL SURFACE & 3' FROM PROPERTY LINE. LOCATE MIN 1'-6" FROM EQUIPMENT CURB, ROOF PEAK, OR GUTTER. OFFSET IN CEILING SPACE WHERE REQ'D TO MEET THESE CONDITIONS.

1 plumbing vent detail
nts

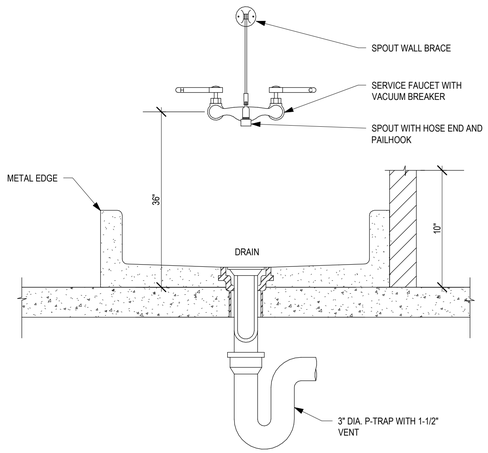

NOTE: WHERE FAUCET IS INSTALLED ON STUD WALL PROVIDE WOOD BLOCKING IN WALL TO SECURE FAUCET BRACE.

2 janitor sink detail
nts

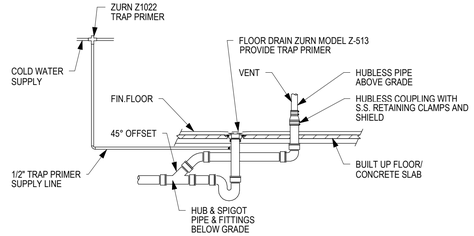

NOTE:
PROVIDE TRAP PRIMER AT EVERY FLOOR DRAIN.

3 floor drain and vent detail
nts

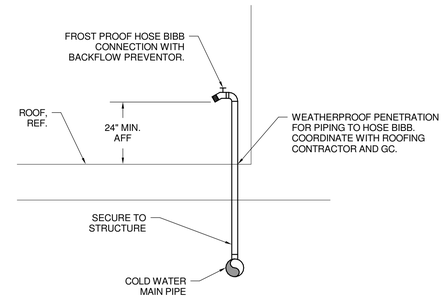

5 rooftop hose bibb detail
nts

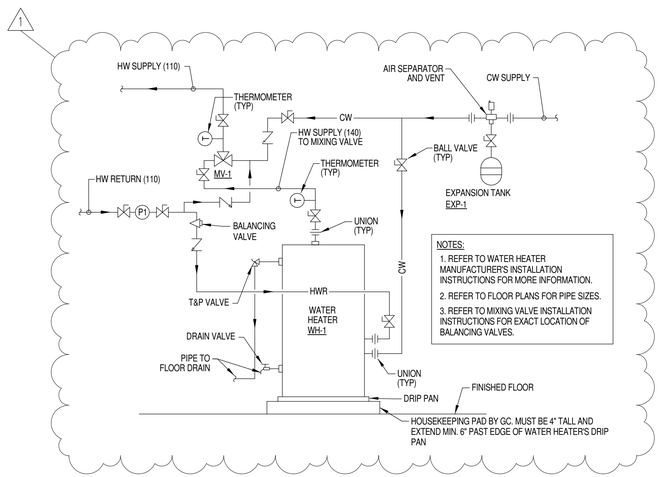

4 water heater piping diagram
nts

N

CERTIFICATION:

STATUS: BIDDING AND PERMITTING SET

CONSULTANT:

edm
45 South Main Street
Unionville, Connecticut 06085

REVISIONS:

MARK	DATE:	DESCRIPTION
1	11.30.18	addendum #01

UNIVERSITY OF CONNECTICUT
UNIVERSITY PLANNING DESIGN & CONSTRUCTION
31 LEDOYT ROAD UNIT 3038
STORRS, CONNECTICUT 06269-3038
TELEPHONE: (860) 486-2776
FACSIMILE: (860) 486-3177

PROJECT:

Whitney Dining Hall
1346 Storrs Road
Storrs CT. 06269-3038

PROJECT NO: 201687
WORK ORDER NO:
FILE NAME:
AUTHOR:
DRAFTER:
SCALE: 12" = 1'-0"
PRINT DATE: 11.02.2018
SHEET TITLE: Plumbing Details & Schedules

SHEET: P-201

SECTION 114000 – FOOD SERVICE EQUIPMENT

PART 1 - GENERAL

1.01 PROVISIONS

A. The general provisions of the Contract, including General and Supplementary General Conditions, and Division 1 General Requirements, apply to work specified in this Section.

1.02 SUMMARY

A. Work Included: Food Service Equipment, including but not limited to, the following:

1. Equipment as shown on Foodservice Drawings and Itemized Specifications, Specifications indicate minimum acceptable products.

2. Uncrating, assembling, rigging setting, leveling, and properly and securely fastening to wall or floor as required with all necessary items such as braces, filler pieces and related items.

3. Onsite supervision and instruction for work to be installed /performed by KEC as well as work by other contractors in connection with foodservice equipment specified in this section.

4. Attendance at least once a week or as required by the GC for onsite meetings during preconstruction, construction and construction administration.

5. Furnish, erect and maintain staging and scaffolding, including mechanical hoisting equipment, required for the performance of the Food Service Equipment Subcontractor's work.

6. Plumbing, electrical, steam, and general accessories for items specified in this section, including, but not limited to faucets, strainers, lever-wastes, tail pieces, control valves, cords and plugs, and disconnects provided as standard with the equipment. Furnish to the proper mechanical or electrical trades for the final connection of utility services. Tag each item with the equipment number for easy reference.

B. Related Work Specified in other sections, KEC is not responsible for providing or installing:

1. Plumbing Work:
   a. Hose bibs
   b. Final gas and plumbing connections
   c. Water pressure regulators
   d. Traps, tail pieces, valves, stops and shutoff valves
   e. Grease traps
   f. Backflow prevention
   g. Floor sinks
   h. Pressure Reducing Valves

2. Heating, Ventilating and Air Conditioning:
   a. Final duct connections
   b. Exhaust and supply fans
   c. Ductwork
   d. Fan switches

3. Electrical Work:
    a. Final electrical connections
    b. Disconnect switches
    c. Receptacles
    d. Ballasts
    e. Control Wiring
    f. Internal wiring to a control panel or switch

4. Wall Blocking Section 061000

1.03 SUBMITTALS

A. Shop Drawings: Prepare separate plans for layout, electrical, plumbing and building conditions/HVAC plans at a scale of 1/4 inch to the foot showing dimension location, size, height above finished floor and, where necessary, capacity of mechanical services required for each item of equipment. Foodservice Contract Documents shall not be reproduced and represented as submittal documents.

B. Equipment: Prepare detailed drawings at a minimum scale of 3/4 inch to the foot, plus necessary cross sections at a scale of 3/4 inch to the foot, showing complete details of each item of custom manufacture. Include accurately dimensioned layouts and locations for floor depressions if required or called for in these specifications. Include accurately dimensioned details and locations of special wall openings where items of equipment extend through walls.

C. Product Data: Submit brochures containing illustrations, specifications, accessories, line drawings and rough-in information on brand name items (items not of custom manufacture).

D. O & M Manuals: Submit operation and maintenance manuals containing installation, operating, maintenance and warranty information on brand name items (items not of custom manufacture).

E. LEED Submittals: Demonstrate compliance with the following criteria, in compliance with Specification Section 018113 – Sustainable Design Requirements:

1. EA Prerequisite 3 and Credit EA 4: Manufacturer's product data for refrigeration systems, including printed manufacturers' statements indicating that not CFC-based refrigerants are used.

2. Credit EQ 4.1: Manufacturer's product data for adhesives and sealants, including printed statement of VOC content.

1.04 QUALITY ASSURANCE

A. Qualification of Fabricators

1. To fabricate equipment such as tables, sinks, and counter tops, described in these specifications other than by name and catalog numbers, employ an equipment fabricator who has the plant, personnel and engineering facilities to properly design and manufacture high quality equipment. The fabricator shall be subject to the approval of Architect, Owner and Colburn and Guyette. Work in the above category shall be manufactured by one manufacturer of standard unit assembly and uniform design and finish.

2. The Food Service Equipment Subcontractor for the equipment as specified in this section shall be a recognized distributor for these items of equipment which are of other manufacture than his own.

3. Equipment to be supplied under this section of the specifications will not be acceptable unless the Food Service Equipment Subcontractor furnishes evidence that equipment of approximately the same type and design has been installed elsewhere and has been operating successfully for at least 5 years. Equipment installed for test or prototype will not be considered acceptable.

B. Fabricate and install equipment to meet Local, State and National Board of Health regulations. Perform work and provide materials in full accordance with latest rules of U.S. Public Health Services, National Board of Fire Underwriters, and local or State Ordinances, regulations of State Fire Marshall and Underwriters Laboratory.

C. Reference Standards:

1. NSF Standards: Comply with applicable National Sanitation Foundation standards and recommended criteria. Provide each principal item of food service equipment with a "Seal of Approval" by NSF.

2. UL Labels: Where available, provide UL Labels on items of food service equipment with prime electrical components. Provide UL "recognized marking" on other items with electrical components, signifying listing by UL, where available.

3. ANSI Standards: Comply with applicable ANSI standards for gas-burning appliances, for piping to compressed gas cylinders, and for vacuum breakers and air gaps to prevent siphonage in water piping (ANSI 221) series, B57. 1, A40.6 and A40.4).

4. NFPA Codes: Comply with "National Electrical Code:, and BOCA with NFPA No. 96 for exhaust system equipment, NFPA No. 17 & 17A for wet chemical extinguishing system equipment; and NFPA No. 54.

1.05 PRODUCT DELIVERY, STORAGE AND HANDLING

A. Properly package and protect equipment during shipping, handling, and storing to prevent damage.

B. Store indoors or under cover, on raised platforms, fully protected from dirt and moisture.

C. Measures must be taken to protect equipment after installation and before final turnover.

1.06 EXISTING CONDITIONS

A. Field Measurements: Check measurements at building and be responsible for making the food service equipment fit.
Examine the drawings and identify critical areas which might affect the fitting of equipment, aisles, installation, or other functional aspects of the equipment. Submit drawings which show structural measurements and dimensions which are critical to the proper execution and fitting of work.

1.07 WARRANTIES

A. New equipment specified for this facility shall be guaranteed for a period of one (1) year beginning on the date of the final acceptance of this section. Manufacturers shall provide their standard guarantees and warranties for work under this section. However, such guarantees and warranties shall be in addition to and not in lieu of the above stated one (1) year warranty as well as other liabilities which the Manufacturer and the Food Service Equipment Subcontractor may have by law or by other provisions of the Contract Documents.

1.08 EXISTING EQUIPMENT

A. Verify and document condition of equipment to be reused.

B. Confirm status of removed equipment with owner prior to any action taken.

C. All existing equipment to be re-used to be relocated and set in place by KEC and all MEP disconnect and reconnection by appropriate trades.

D. General Contractor responsible for any on site storage of existing equipment to be reused.

E. Remove and dispose of all existing equipment to be replaced.

F. Coordinate disconnect, capping and making safe of equipment utilities by General Contractor. Coordinate reconnect of all existing equipment with appropriate trades.

G. Coordinate all new equipment locations in the field with General Contractor to ensure proper placement as per equipment layout on Contract Documents.

H. Verify and coordinate all details, dimensions and utility requirements for all existing equipment to be re-used in the field with the General Contractor.

I. Provide General Cleaning of existing equipment to be reused.

1.09 SUBSTITUTIONS

A. Substitutions must be submitted and all of the following parameters must be met at the time of bid to be considered. All items identified in this section shall be provided as specified. Substitutions will be considered only if the following conditions have been satisfied, otherwise requests for substitutions shall be returned without action except to record noncompliance with the Contract Documents:

1. The Foodservice Drawings and Specifications have been designed and engineered based on the primary specification. Any and all coordination and cost associated with the incorporation of a substituted piece of equipment will be entirely the responsibility of the KEC. Including but not limited to engineering changes due to utility discrepancies, instructions to G.C. and/ or subcontractors, providing proper clearances to adjacent structures, proper fit, conduit trenching and overhead utilities and any and all modifications to building or architectural elements.

2. All substitutions must be clearly listed in the bid proposal and shall include:
   a. Manufacturer/ model number
   b. Utility data
      a. Accessories
   d. A list of deviations from primary spec must be documented against original requirements.
      a. Shop drawings for exhaust hoods, walk-ins, accumulators/ conveyors, millwork, UDS systems, variable demand vent systems and any other items deemed worthy of extra attention/ coordination. Simply submitting

   It is the responsibility of the KEC to assure that all “Or Equal” or listed alternates meet the original design intent and criteria of the primary spec.
   Primary manufacturer and model must be specified unless otherwise noted in Division 1 of the bidding instruction if Energy Star Rating or State Plumbing Board Approval is required.

3. Any revisions to Contract Documents are the responsibility of the KEC proposing the

substitution.

4. Proposed substitutions are in keeping with the general intent of Contract Documents.

5. The suggested substitution is directly related to an "or equal" clause or similar language in the Contract Documents or as requested by the Owner/ Architect. Otherwise, provide as specified.

6. Proposed substitutions shall be equal in quality, durability, appearance, strength, design and approvals. If it is determined at any time by the owner or owner's rep prior to final acceptance that the substitution is not equal to primary spec, the KEC shall assume responsibility and all associated costs required to replace with the correct model.

7. Proposed substitutions shall perform equally the function imposed by the general design.

8. Proposed substitutions conform substantially, even with deviations, to the detailed requirements for the product identified in these specifications. Including, but not limited to, voltage, amperage, phase, MBTU, cold water connections, hot water connections, waste drains and exhaust/ supply CFM requirements, collar sizes and static pressure.

9. A substantial advantage is afforded the Owner, in terms of cost, time, energy conservation or other considerations of merit, after deducting offsetting responsibilities the Owner may be required to bear. Said advantages and responsibilities shall be fully outlined in the above noted submission requirements. Additional requirements to the Owner may include compensation to the Architect and Food Service Consultant for redesign and evaluation services, increased costs of other construction by the Owner or separate contractors, and similar considerations.

10. Proposed substitutions must meet all approvals and certifications of the originally specified equipment, including but not limited to, Energy Star and State Plumbing Board Approval. Appropriate documentation is required to be submitted with the proposed substitutions at the time of bid.

PART 2 - PRODUCTS

2.01 EQUIPMENT

A. Provide manufacturer's standard equipment except as otherwise noted in the Itemized Specification.

2.02 MATERIALS

A. Stainless steel (s/s): Non-corrodible alloy, or stainless steel, specified hereinafter type 304/305 stainless steel, having a standard analysis of 18 percent chrome and 8 percent nickel. (AISI type 304/305, hardest workable temper, No. 4 directional polish).

B. Galvanized steel sheet (GLV): Eight (8) coat galvanized copper bearing, used in largest possible sheets with as few joints as necessary. Painted hammer stone gray enamel unless otherwise specified. (ASTM A 526 except ASTM A 527 for extensive forming: ASTM A 525, G90 zinc coating chemical treatment.)

C. Steel sheet: ASTM A 569 hot-rolled or cold formed, carbon steel unless stainless steel is indicated.

D. Steel structural members: Hot-rolled or cold formed, carbon steel unless stainless steel is indicated.

E. Galvanized finish: ASTM 123 hot-dipped zinc coating.

F. Aluminum: ASTM B209/B221 sheet, plate, and extrusion (as indicated): Alloy, tempered finish as determined by manufacturer/fabricator, except 0.40 mil natural anodized finish on exposed work unless another finish is indicated.

G. Sealants: One-part or two-part, polyurethane or silicon based liquid elastomeric sealant, non solvent release type, mildew resistant. Low VOC sealants shall be used on all LEED projects.

H. Gaskets: Solid or hollow (but not cellular) neoprene or polyvinyl chloride: light gray, self-adhesive or prepared for either adhesive application or mechanical anchorage.

I. Paints and Coatings:

1. Provide the types of painting and coating materials which after drying or curing are durable, non toxic, non dusting, non flaking and mildew resistant.

2. Primer coating for metal: Type suitable for baking where indicated.

3. Enamel for metal: Synthetic type suitable for baking where indicated.

4. Sound deadening: Heavy-bodied resinous coating, filled with granulated cork or other resilient material, compounded for permanent, non flaking adhesion to metal in a 1/8 inch thick coating.

2.03 FABRICATION OF METALWORK

A. Gauges, where specified, shall be United States standard gauges. Finish exposed surfaces to #4 or 180 grit. Where manufacturing process and welding disturb original finish, carefully re-grind, polish, and restore to match balance of surface.

B. General Fabrication Requirements: Remove burrs from sheared edges of metalwork, ease the corners, and smooth to eliminate cutting hazard. Bend sheets of metal at not less than the minimum radius required to avoid grain separation in the metal. Maintain flat, smooth surfaces without damage to finish.

C. Reinforce metal at locations of hardware, anchorages and accessory attachments, wherever metal is less than fourteen (14) gauge or requires mortised application. Conceal reinforcements to the greatest extent possible. Weld in place on concealed faces.

D. Where fasteners are permitted, provide Phillips head flat or oval head machine screws.

E. Work-surface fabrication: Fabricate metal work surfaces by forming and providing seamless construction, using welding rod matching sheet metal. Where necessary for disassembly, provide waterproof gasket draw-type joints with concealed bolting.

F. Reinforce work surfaces 30 inches o.c. both ways with galvanized or stainless concealed structural members. Reinforce edges which are not self-reinforced by formed edges.

G. Sound deaden underside of metal work surfaces, including sinks and similar units, with a coating of sound deadening material. Hold coating back 3 inches from sanitary edges which are open for cleaning.

H. Structural framing: Except as otherwise indicated, provide framing of minimum 1 inch pipe size round pipe or tube members, with mitered and welded joints and gusset plates ground smooth. Provide 14 gauge stainless steel tube for exposed framing and galvanized steel pipe for concealed framing.

I. Enclosure General: Provide enclosures, including panels housing, and skirt for service lines and mechanical/electrical devices and secondary enclosures for equipment items where indicated and where required for compliance with governing regulations and NSF standards. Otherwise, fabricate each item to be as open as possible for ease of cleaning. Where equipment is exposed to view, provide enclosure of service lines operating components and mechanical and electrical devices.

J. Welding:

1. Stainless Steel Welds: Use stainless steel electrodes. Finish welds free of pits, flaws, discoloration, and peen to remove flux and impurities. Grind welds smooth, polish to original finish of metal, with grain uniform to grain of original sheet. Where grinding and/or polishing has destroyed grain, restore blend to omit traces of welding.

2. Solder containing lead as an intentional ingredient shall not be used in a food zone or splash zone (NSF 4.2/ ANSI 2-2010).

3. Grind concealed or exposed welds on unpolished surfaces back to original surface metal to remove impurities from welds. Make welds smooth, with neither dip nor bulge.

K. Electrical Components:

1. Fit fabricated items requiring dry heat with tube heaters of sufficient wattage to provide desired heat. Unless otherwise specified, install heaters directly below bottom shelf, mounted in suitable channels and interconnect with fire resistive covered nickel wire in accordance with State Electrical Codes. Furnish each fixture with one (1) or more thermostatic control, with pilot light indicator.

2. Wiring shall be properly protected in metal enclosures as called for by State Electrical Code and Underwriters Laboratory

3. Exposed electrical outlet boxes on fabricated equipment shall be stainless steel and shall be supplied and mounted by the Food Service Equipment Subcontractor ready for wiring by Electrical Subcontractor.

4. Internal wiring for fabricated equipment items, including electrical devices built into or forming an integral part of these items shall be furnished and installed by the Food Service Equipment Subcontractor in his factory with items wired complete to a junction box within the fixture ready for final connection to building lines by Electrical Subcontractor. Receptacles shall be grounding type listed by Underwriters Laboratories and approved for use by the National Electrical Code. Each single item of fabrication shall be wired to the minimum number of junction boxes possible for that piece of equipment.

5. Unless otherwise specified, furnish cord-connected items with cord sets not exceeding 6 feet in length. Cord sets shall contain an equipment grounding conductor and shall be furnished with caps or plugs listed or recognized by Underwriters Laboratories, Inc. Cords shall be listed by Underwriters Laboratories, Inc.

L. Pipestands and Frames:

1. Construct pipestands for open base tables or dish tables of 1-5/8 inch 16 gauge stainless steel. Construct stringers and cross braces of same material. Weld joints between legs and cross braces and grind to a smooth finish.

2. Cross rails supplied to reinforce each leg. Legs anchored to closed gussets at top only and without cross rails are not acceptable except in case of sinks. Fit uprights at top with

die-stamped fully enclosed gussets stud-bolted to underside of top with cadmium-plated lock nuts. Where stainless steel base is called for, stainless steel gussets will be used.

M. Feet:

1. Fit pipe legs with sanitary die- stamped stainless steel bullet shaped feet, fully enclosed with slightly rounded bottom to protect floor. These shall have a total adjustment of 1 inch with thread unexposed.

2. Mount cabinet type fixtures on 6 inch die-stamped sanitary one-piece stainless steel feet, capable of an adjustment of 1 inch with thread unexposed.

N. Table Tops (metal):

1. Metal table tops shall be of 14 gauge stainless steel. Shop seams and corners shall be welded, ground smooth and polished. Brace tops with 1 inch by 1 inch by 4 inch galvanized channel running length of table. Cross angles shall be furnished at intermediate legs. Bracing shall be stud bolted to underside of top with cadmium plated lock nuts. Sound deadening mastic shall break metal-to-metal contact between angle bracing and underside of top.

2. Provide field joints in top where necessary. Locate field joints for practical construction and consistent in size, convenient for shipping and accessibility into building.

3. Metal top edges shall be turned down 1-3/4 inch in a bullnosed roll except where otherwise called for in Itemized Specifications and/or Fabrication Drawings/Details.

O. Dish Table Tops:

1. Construct tops of dish tables from 14 gauge stainless steel with free edges turned up 3 inches and finished with die-formed sanitary rolled rim. Sides adjacent to walls or higher fixtures flanged up 10 inches and back 1-1/2 inches at 45 degree angle and vertically down one inch, except where otherwise called for in Itemized Specification and/or Fabrication Drawings/Details. Interior horizontal and vertical corners shall be coved on 5/8 inch radius. Outside radius of rolled rim corners concentric with inside cove brace with 1-1/2 inch by 1-1/2 inch by 1/8 inch stainless steel angle front-to-back on approximately 24 inch centers. Bracing shall be stud-bolted to underside of top with cadmium plated lock nuts. Sound deadening mastic shall break metal-to metal contact between angle bracing and underside of top.

2. Mount dish table tops on tubing legs and connecting rails.

3. Provide full-length splashes with closed ends.

P. Cabinet Bases:

1. Enclosed bases or cabinet bodies shall be of 18 gauge stainless steel or as called for in Itemized Specifications. Body shall be enclosed on front and ends, with body corners square. Ends shall terminate at operators side in a 2 inch wide vertical mullion. Mullion shall be in accordance with NSF requirements. Body shall be braced at top with 1-1/2 inch by 1-1/2 inch by 1/8 inch stainless steel angle frame work with angles spaced on approximately 24 inch centers. Body shall be mounted on 6 inch high stainless steel bullet counter legs, welded to 12 gauge gussets, which in turn shall be welded to the body.

2. In the case of fixtures fitting against or between the walls, the bodies shall be set in 1 inch from the wall line, but tops will extend back to wall line. This will permit adjustment

to wall irregularities. A vertical trim strip of the same material as body shall be provided and installed at ends or rear of fixture to close gap between body and wall.

Q. Elevated Cabinets: Top shall be constructed of 20 gauge material or as called for in Itemized Specifications with edges turned down 1-1/2 inches from rear to front. Twenty (20) gauge body shall be enclosed on back and ends with bottom and intermediate shelves. Ends shall terminate at front in a 2 inch mullion. Mullion shall be open in accordance with NSF. Intermediate stationary shelf shall be welded to body. Back shall be fitted with channels for supporting cabinet to wall. Shelves shall be 18 gauge stainless steel.

R. Sliding Doors: Doors shall be double wall constructed with exterior and interior of 18 gauge stainless steel, fitted at top with steel ball bearing roller, operating in die-formed overhead track of same material as door exterior. Guide pins shall be located on bottom shelf at center of opening. Doors shall be fitted with die stamped, stainless steel recessed handles and a stainless steel channel for guiding door at bottom.

S. Hinged Doors: Doors shall be double pan-shaped with exterior and interior of 18 gauge stainless steel. Hinged doors, flush type, shall be mounted on concealed stainless steel slip joint hinges. Doors shall have integral, flush handles and shall be fitted with magnetic catches.

T. Drawers: Drawer bodies shall be die-stamped pans, sizes and material as called for in Itemized Specifications and/or Fabrication Drawings/Details with horizontal and vertical corners generously coved. Drawer bodies or pans shall rest in and shall be removable from cradle. Cradle shall be welded to die-stamped drawer face of 16 gauge stainless steel. Drawer face shall be furnished with die-stamped integral handle. Cradle shall be furnished with ball bearing steel rollers and stops. Drawer housing shall be complete with ball bearing steel rollers and built-in self-closing track to accommodate rollers on cradle.

U. Undershelves for Open Bases: Undershelves on open base tables shall be solid, of 16 gauge stainless steel.

V. Interior Shelves for Cabinet Bases: Interior shelves in cabinet bodies and enclosed bases shall be solid, of 16 gauge stainless steel with set-back construction. Provide non-removable shelves with ends and backs turned up 1-1/2 inches against body of fixture, and welded to same. Front edge shall be further braced with longitudinal centered 1-1/2 inch by 1-1/2 inch by 1/8 inch angles.

W. Pipe Chases:

1. Where top arrangement of enclosed base table make it necessary for plumbing and supply piping to be passed through base, this piping shall be enclosed in suitable pipe chase with easily removable access panels. These access panels are not to be held in place with screws or latches, but formed up in a pan shape, removable with out tools.

2. In detailing fixtures, the Food Service Equipment Subcontractor shall consult with the Mechanical and Electrical Subcontractor to be certain that due allowance is made for traps or other controls and fittings.

3. Where plumbing and supplying piping pass through shelves on open base tables, shelves neatly punched or die-stamped for piping, the Food Service Equipment Subcontractor shall note location of such pipe chases or stamped pipe openings on his plan and/or detail drawings. Unless otherwise specified, shelves in these fixtures shall be turned up a minimum of 3 inches at edge of pipe chase. These shall be of sufficient size to accommodate necessary risers, so that additional holes need not be cut. The Food Service Equipment Subcontractor shall caution the Mechanical Subcontractor to rough-in

as near to these chases as possible, so risers from rough-in to final connection run through existing chases and/or slots.

X. Elevated Shelves: Elevated shelves shall be constructed of 16 gauge stainless steel, unless otherwise called for with edges and brackets per Fabrication Details. Shelves shall be mounted on solid stainless steel gusset type wall brackets. If table mounted, supports shall be stainless steel tubing of size and gauge called for in Fabrication Details and mounted in accordance with one of the following:

1. Supports mounted to flat surface (metal), without undercounter restrictions, shall be bolted through top with 3/4 inch stainless steel bolt into steel bushings wedged into tubing or welded into flange welded to table top as called for in Fabrication Details.

2. Supports mounted to flat surface (maple or composition) shall be surface mounted with raised ferrules and set screws.

3. Supports mounted to rolled rim shall be contoured to match roll and mounted with raised ferrules and set screws.

4. Supports mounted to table riser, use stainless steel saddle brackets mounted to riser or mounted through riser to angle bracket and welded to riser and bracket as called for in Fabrication Details.

Y. Sinks:

1. Sinks shall be of size called for and constructed of 14 gauge stainless steel with backs, bottoms, and front formed of one continuous sheet with ends welded in place.

2. Horizontal edges and vertical corners of sink shall be coved on 3/4 inch radius. Two and three compartment sinks shall have double wall partitions of same material as sink. Intersections between partitions and sink body shall be coved on 3/4 inch radius, all welded construction.

3. Bottom of each compartment shall have six (6) radial grooves pitched to drain depression. Sinks shall have 2 inch basket lever-wastes unless otherwise specified.

4. Front and end edges of sink shall be finished with 1-1/2 inch diameter semi-roll with rounded corners, with entire roll terminating against rear splash and fully welded and polished. Back turned up 6 inches at work table w/ sinks and 12” at pot sinks with 1-1/2 inch turn back at top and ends on 45 degree angle and vertically down 1 inch, except where otherwise called for in Itemized Specification and/or Fabrication Drawings/Details. Ends of splash shall be closed.

5. Equip drawers, cabinets, and doors with tumbler locks and keys.

Z. Casters:

1. Where called for in Itemized Specifications, provide heavy-duty, neoprene ball bearing swivel casters.

2. Unless otherwise specified, casters shall have foot-activated locking brakes.

2.04 WALK-IN REFRIGERATION

A. Construction: Construct the box using a 4" thickness of frost foamed-in-place urethane insulation with a K factor of .13" or less between die-formed metal pans with materials as contained hereinafter. Flange edges of metal pans in on all sides and construct panels with gasketed joints. Join sections by means of cam actuated joining devices. Distance between locks not to exceed 46". Each locking device shall consist of a cam-action, hooked locking arm placed in one section, and a steel rod precisely positioned in the adjoining section so that by rotating the locking arm, the hook engages over the rod with cam-action draws the sections tightly together. Locks are actuated from inside the walk-in. Provide an aligning device in at least one joining device per vertical section. Provide entrance door flush with walls of unit. Provide door with 4" insulation same as walls, a 2'-10" x 6'-4" high clear opening, balloon type gasket on three sides, and adjustable sweep gasket on the bottom. Provide door with two cam lift positive closing polishing aluminum hinges with nylon bearings, and a polished aluminum latch assembly with cylinder lock. The inside safety release handle shall operate on no more than a quarter turn, and shall be effective for all locking methods employed by manufacturer. The Food Service Equipment Subcontractor shall provide 14 gauge stainless steel thresholds. Build heater wires into the front of door sections under the metal at the point of gasket contact. Construct the box in accordance with N.S.F. Standards, and provide the standard dial thermometer.

B. Materials: Construct exterior surfaces of walk-in box assembly, except exposed surface of walk-in cooler and freezer, of 22 gauge galvanized steel; interior surfaces (with the exception of interior floors) of aluminum; exposed exterior surface of walk-in cooler and freezer of stucco patterned .042" aluminum; interior floor of 14 gauge galvanized steel when box is depressed and 12 gauge mill aluminum when box is specified with an interior floor ramp; and doors of stainless steel on both sides unless otherwise specified in Itemized Specification.

C. Accessories: Provide box with interwired vapor proof light fixtures and guards (quantity as stated in Itemized Specification) operative from an outside light switch and pilot light. The Food Service Equipment Subcontractor shall provide and install 18 gauge trim angles at the sides and a closer panel from the box to the adjacent finished ceiling at the front. The fabricated panel at top shall support finished ceiling provided by the Contractor. Provide walk-in box with a dual temperature monitoring alarm system as described herein. The Food Service Equipment Subcontractor shall provide and install 36" H, 16 gauge stainless steel diamond tread kick panel on exposed interior surface of walk-in box door. The Food Service Equipment Subcontractor shall seal kick panels to box, break all edges, and secure panels with flat head stainless steel screws.

D. Mechanical Refrigeration:

1. Furnish and install complete refrigeration for the walk-in boxes in accordance with the plans and Itemized Specification. Include condensing unit, evaporator coils, piping and accessories specified, and as required to provide complete and satisfactory systems in accordance with accepted refrigeration practice.

2. Refrigerant Piping: Furnish and install all of the interconnecting piping between the condensing units and their respective unit coolers. Install piping in a neat and workmanlike manner with adjustable hangers spaced at not more than 10 foot intervals on all horizontal runs, or 6 foot intervals on vertical runs. Provide line sizes in accordance with equipment manufacturer's standards and best refrigeration practice, to assure proper refrigerant feed to evaporators, avoid excessive pressure drop, prevent excessive amounts of lubricating oil from being trapped in any part of the system, protect the compressors from loss of lubrication in all times, prevent liquid refrigerant from entering the compressor during operation or idle time, and maintain a clean and dry system. All refrigeration piping to be a Type L, ACR grade, hard drawn seamless copper tubing, wrought type copper fittings with silver bearing soldered joints. In each refrigeration system, include liquid and

suction cut-off valves at the evaporator, with a thermostatic expansion valve and solenoid. Furnish and install all necessary sleeves for refrigerant and evaporator condensate piping wherever piping passes through a ceiling or wall. Fabricate sleeves of a non-conductive gray plastic tubing, sized at least 1/4" larger than piping or conduit and neatly pack with brine putty after installation.

3. Condensate Drains: Condensate drain piping from the unit coolers to open drains shall be provided by the Plumbing Subcontractor. Provide drain line heaters in the freezer compartment as part of this section.

4. Above Freezing Areas Insulation: Cover all suction lines for refrigerated areas having a temperature above freezing with 1/2" Armaflex insulation being applied to these lines as they are being installed so that insulation will not have to be split, and in accordance with the manufacturer's recommendation.

5. Below Freezing Areas Insulation: Cover all suction lines for refrigerated areas having a temperature below freezing with 3/4" Armaflex insulation being applied to these lines as they are being installed so that insulation will not have to be split, and in accordance with the manufacturer's recommendation.

6. Condensate Lines: Insulate all condensate lines passing through the refrigerated areas similarly with 1/2" Armaflex insulation.

7. Temperature Controls: Control the temperature in each refrigerated area by means of a remote bulb thermostat wired to actuate a solenoid valve in the liquid line with the compressor operation controlled by the low-pressure cut-out switch. Adjust thermostats to maintain the room temperature specified.

8. Defrost Controls: Provide all refrigerated areas with a time initiated defrost cycle. Locate the defrost time clock at the condensing units. Provide contacts capable of handling electric load of electric defrost of evaporator coils.

9. Mounting and Wiring: Mount the thermostat on the wall behind the evaporator coil. The Electrical Subcontractor shall interwire between the condensing unit defrost clock, thermostat, liquid line solenoid valve and the evaporator coil. Provide adequate wiring diagrams and guidance to achieve correct operation of system.

10. Refrigerant Testing: Pressure and leak test the entire system for no less than 100 P.S.I.G., clean and dehydrate by maintaining a vacuum of 50 microns or lower for a period of five hours. The required operating charge of refrigerant and oil, if necessary, shall be added and the entire system tested for performance. Mark each system clearly as to the refrigerant type required.

11. Guarantee: Provide a mechanical guarantee on all mechanical refrigerant equipment for a period of one year after date of acceptance by the Owner, and provide an emergency service, free of charge, whenever necessary on a 24-hour, seven-day-a-week basis during the guarantee period. The installer shall provide the year's service, and under no circumstances will the service policy be sublet to another refrigerant contractor. Locate the name of the installer's service agency for the guarantee period in a prominent place on the condensing units. Repair any leaks that occur during the first year period of operation after acceptance by the Owner and cover any necessary refrigerant added during this period at no expense to the Owner. Provide the condensing units with an additional four-year warranty to commence upon the completion of the aforementioned guarantee.

12. Guarantee equipment to maintain the following temperatures:
    COOLER +35 degrees F.

FREEZER -10 degrees F.

13. Condensing Unit: Design the condensing unit for operation with refrigerant that is in compliance with the “Montreal Protocol”. Capacity, horsepower, design suction and condensing temperatures of each unit are specified in the equipment schedule contained hereinafter. Each unit shall consist of a motor, compressor, refrigerant, condenser, liquid receiver, compressor service valves and a dual high-low pressure control. Provide the compressor with motor, built-in suction gas filter, oil sight glass and mounted unit on a steel base. Compressor shall not exceed 1750 R.P.M. with a maximum piston speed of 600 R.P.M. Supply the condensing units with an air-cooled condenser constructed of copper tube and aluminum fin condensers together with a fan motor assembly, or water cooled condensing unit to be connected to chilled water loop. Refer to itemized specifications.

14. Condensing Unit Housing: Provide the unit with a factory mounted prewired control panel complete with circuit breakers and/ or fuse disconnect, and with defrost clock. Provide, in addition, a liquid line assembly consisting of a filter-drier, sight glass and shut-off valve, a factory mounted liquid line vibration eliminator and a suction line vibration eliminator. Provide the unit with the proper controls and crankcase heater for outdoor installation. Mount the units on steel legs with flanged feet and protect the unit with a weatherproof cowl constructed of galvalume with hinged compressor compartment cover, and weatherproof electrical panel. Provide positive winter control by means of a factory mounted floated head pressure control valve. Verify location of condensing units with the Contractor. For roof mounted applications, secure to structure provided by the Contractor. Related sub-trades shall make the final electrical and drain connections and the interwiring between the terminal clocks and the evaporator coils.

15. Evaporator Coil - Walk-In Cooler: Provide evaporator for cooler box, designed for installation at the juncture of wall and ceiling. Construct unit so that air is drawn in through the finned surface and discharged parallel to the ceiling. Construct finned coil of copper tubes with aluminum fins, 6 per inch. Provide fan motor with a drip proof, continuous fan duty type, operating at no more than 100 R.P.M. Construct casing of aluminum. Construct the unit cooler hardware of stainless steel. Provide a suction-liquid heat exchanger and mount within the casing. Construct coil in accordance with N.S.F. Standards. The Electrical Subcontractor shall perform all interconnect wiring in the Cooler.

16. Evaporator Coil - Walk-In Freezer: Use the automatic electric defrost system providing application of heat in the walk-in freezer and provide one coil, with electric defrost heaters, suction-liquid heat interchanger, drainline heater cable, timer and safety heat thermostat. Provide defrost system with temperature termination to prevent excessively long defrost period. Construct coil of copper tubes and aluminum fins, 6 per inch. Enclose stainless steel sheathed electric heating elements- 3/8” O.D. within the collared fin holes. Heat the drain pan by means of stainless steel sheathed elements held in place by spring clips. Construct casing with stainless steel hardware. Provide fan motors of a drip proof, continuous fan duty type operating at not more than 1500 R.P.M. Provide installation of the electric defrost system in accordance with the manufacturer’s recommendations. Construct coil in accordance with N.S.F. Standards. The Electrical Subcontractor shall perform all interconnect wiring in the freezer.

17. Furnish and install 3/8” diameter threaded nylon mounting rods with stainless steel washers and nuts, and reinforcing angle at the exterior top of the rooms for the mounting of the unit evaporators.

2.05 FIELD QUALITY CONTROL

A. The Owner, Architect or their duly authorized representative shall have free access to Food Service Equipment Subcontractor's shop or shops during the construction of this equipment for the purpose of making inspections to see that plans, specifications, and detail drawings are being adhered to carefully. The Food Service Equipment Subcontractor shall correct errors found during these inspections to the extent and within scope of plans, specifications and detail drawings.

B. Material delivered to site may be inspected by Owner, Architect or their authorized representative. The Food Service Equipment Subcontractor shall within a reasonable time after receiving written notice from Architect to that effect, proceed to remove from grounds or building materials, fixtures or apparatus condemned by Architect or take down and remove portions of work which Architect deems as failing to conform to drawings and specifications and to conditions of the contract.

PART 3 - EXECUTION

3.01 INSPECTION AND PREPARATION

A. Rough-in-work: Require Installer of food service equipment to examine roughed-in mechanical and electrical services and installation of floors, walls, columns and ceilings, and conditions under which the work is to be installed; and to verify dimensions of services and substrates before fabricating and installing the work. Notify the Food Service Equipment Subcontractor in writing of unsatisfactory conditions for proper installation of food service equipment. Do not proceed with fabrication and installation until unsatisfactory dimensions and conditions have been corrected in a manner acceptable to the Installer.

3.02 INSTALLATION

A. Service Lines and Equipment Connections: Comply with applicable requirements of Division-22 for piping connections and piping systems. Comply with applicable requirements of Division-26 Sections for electrical work including equipment connections.

B. Set each item of non mobile and non portable equipment securely in place, leveled and adjusted to correct height. Anchor to supporting substrate where indicted and where required for sustained operation and use without shifting or dislocation.

C. Conceal anchorages where possible. Adjust counter tops and other work surfaces to a level tolerance of .0625 inch maximum offset, and maximum variation from level or indicated slope of .0625 inch per foot.

D. Complete field assembly joints in the work (joints which cannot be complete in shop) by welding, bolting and gasketing, or similar methods as indicated. Grind welds, smooth and restore finish. Set or trim gaskets flush, except for "T" gaskets as indicated.

E. Treat enclosed spaces inaccessible after equipment installation by covering horizontal surfaces with powdered borax at a rate of four ounces per square foot.

F. Install closure plates and strips where required, with joints coordinated with units of equipment. Make joints airtight, waterproof, vermin-proof and sanitary for cleaning purposes. In general, make sealed joints not less than .125 inch at .25 inch depth. Shape exposed surfaces of sealant slightly concave, with edges flush with faces of materials at joint. At internal corner joints, apply sealant or gaskets to form a sealant-filled or gasket joints up to .50 inch joint width; metal

closure strips for wider joints, with sealant application each side of strips. Anchor gaskets mechanically or with adhesives to prevent displacement.

3.03 CLEANING AND RESTORING FINISHES

A. After completion of installation, and completion of other major work in food service areas, remove protective coverings, and clean food service equipment, internally and externally. Restore exposed and semi-exposed finishes to remove abrasions and other damages; polish exposed metal surfaces and touch-up painted surfaces. Replace work which cannot be successfully restored.

3.04 TESTING, START-UP AND INSTRUCTIONS

A. General: Execute the start-up of food service equipment after service lines have been tested, balanced and adjusted for pressure, voltage and similar considerations; and after water and steam lines have been cleaned and treated for sanitation.

B. Test each item of operational equipment to demonstrate that it is operating properly and that controls and safety devices are functioning. Repair or replace equipment which is found to be defective in its operation, including units which are below capacity or operating with excessive noise or vibration.

C. Instruct Owner's operating personnel in proper operation and maintenance procedures for each item of operational food service equipment.

D. Final Cleaning: After testing and start-up, and before the time of substantial completion, clean and sanitize food service equipment, and leave in condition ready for use in food service.

3.05 ITEMIZED SPECIFICATION

ITEM # 1 COFFEE COUNTER

Quantity: One (1)
Manufacturer: MILLWORK
Model: CUSTOM

1. Provide as per Foodservice Millwork Drawings and Details and the following:
2. Coordinate installation of Item No. 4 - 30" Long Refrigerated Grab & Go
3. Verify and coordinate all finishes and hardware with the Architect.
4. KEC to provide protection between equipment and countertop from hot and cold temperature fluctuations, as per detail M1-1 on sheet K-502
5. Counter shall be constructed entirely of stainless steel and have 2" square tubular framing.
6. Provide with 1-1/4" countertop and plate shelves (finish to be determined) with eased edges. Verify finish material with architectural specifications.
7. Provide all exposed surfaces with PL-2 applied vertically over 3/4" industrial grade medium density fiberboard. Verify finish materials with architectural specifications.
8. Provide with adjustable shelves with premium grade plastic laminate over 3/4” industrial grade medium density fiberboard. Verify color and manufacturer with Architect.
9. Coordinate coving WB-1 (by G.C.) over 4" high 14 ga. stainless steel with tile backerboard in field with the General Contractor.
10. Verify and coordinate air circulation requirements for all drop-in equipment.
11. Provide penetrations in base for indirect waste piping coordinated with floor sink locations.
12. Provide chrome trim ring for piping at penetrations.
13. Foodservice Equipment Subcontractor shall verify and coordinate the fabrication with regard to delivery and access into building.

ITEM # 1A WATER FILTRATION SYSTEM

Quantity: One (1)
Manufacturer: 3M Purification (or equal by Optipure or Everpure)

1. Provide manufacturer's standard and the following:
2. One (1) 3M Purification Model 5624201 (DP290) 3M™ Dual Port Manifold System with Shut-Off Valve, 0.2 micron rating, 10 gpm (37.8 lpm) flow rate, 108,000 gal capacity, (1) 5613802 cartridge, reduces bacteria, sediment, chlorine taste & odor, cyst, scale, for multi-equipment combination applications, ncludes cartridge filter monitor
3. One (1) 3M Purification Model 5613802 (CARTPAK DP290) 3M™ Water Filtration Products - Replacement Cartridge Kit, 0.2 micron rating, 108,000 gal (408,823 lit) capacity, (2) 5613503 & (1) 5582113, reduces bacteria, sediment, chlorine taste & odor, cyst, scale, for 5624201 manifold system, cartridges include cartridge filter monitor
4. Coordinate installation with Item No's 2, 3 & 21 - Hot Water Dispenser, Hot Chocolate Dispenser, and Dual Coffee Brewer.

ITEM # 2 HOT WATER DISPENSER - BY OWNER

Quantity: One (1)
Manufacturer: BUNN
Model: 02500.0001

1. One (1) Model 02500.0001 HW2 Hot Water Dispenser, 2 gallon capacity, 4.2 gallon/hr capacity, 200° setting, includes drip tray, stainless steel exterior, plumbed, 120v/60/1-ph, 1800w, 15amps, NEMA 5-15P, UL, NSF
2. All Owner Supplied equipment to be stored on site by Uconn. KEC will pick up equipment on campus, deliver to the site, uncrate, set in place level, provide all accessories to the owner or to appropriate trade for installation and remove/dispose of all packing/shipping material. General Contractor is to coordinate all work with the KEC and facilitate cooperation across all trades for a successful installation
3. One (1) Model 30201.1001 30201.1001 ED-17-TL EasyClear® In-Line Water Quality System, low volume, taste/odor & chlorine reduction @ 0.5 gpm, 1,500 gallons of sediment, scale inhibitor, 5 micron, designed for one/two 1/2 gallon coffee brewers, NSF
4. Coordinate installation with Item No. 1A - Water Filtration System.

ITEM # 3 HOT CHOCOLATE DISPENSER - EXISTING <Existing>

Quantity: One (1)
Manufacturer: BUNN
Model: FMD-2-0200

1. Existing - Verify and coordinate all dimensions, details and utility requirements in the field with the GC/CM.
2. Coordinate installation with Item number 1A - Water Filtration System

ITEM # 4 30" LONG REFRIGERATED GRAB AND GO

Quantity: One (1)
Manufacturer: EMI Industries
Model: GGO-30-W-R

1. One (1) Model GGO-30-W-R Provide manufacturer's standard and the following:
2. Coordinate installation with Item No. 1 - Coffee Counter
3. Provide with 16 gauge stainless steel edging.
4. Provide with glass front panel with S/S edge protector.
5. Provide with 1" drain connection.
6. Provide with LED interior lighting.
7. Provide with thermometer
8. Provide with time clock.
9. Provide with refrigeration controls
10. Provide with high density foamed in polyurethane insulation.
11. Provide with remote compressor by EMI.
12. Provide with 4'-0" of charged refrigeration line with quick couple connections by EMI.

ITEM # 5 COFFEE DISPENSER WITH HEATED STAND - BY OWNER

Quantity: Four (4)
Manufacturer: BUNN
Model: 20950.0004

1. Four (4) Model 20950.0004 20950.0004 1.5GPR-FF Coffee Server, 1.5 gallon, top handles, fast flow faucet, stainless decor, NSF
2. All Owner Supplied equipment to be stored on site by Uconn. KEC will pick up equipment on campus, deliver to the site, uncrate, set in place level, provide all accessories to the owner or to appropriate trade for installation and remove/dispose of all packing/shipping material. General Contractor is to coordinate all work with the KEC and facilitate cooperation across all trades for a successful installation.

ITEM # 6 CEREAL/COLD BEVERAGE/GLUTEN FREE COUNTER

Quantity: One (1)
Manufacturer: MILLWORK
Model: CUSTOM

1. Provide as per Foodservice Millwork Drawings and Details and the following:
2. Provide unit with two (2) 36" x 5" s/s drip trough with removable grates. Refer to Detail F2-3 on sheet K5.1.
3. Verify and coordinate all finishes and hardware with the Architect.
4. KEC to provide protection between equipment and countertop from hot and cold temperature fluctuations, as per detail M1-1 on sheet K-502
5. Counter shall be constructed entirely of stainless steel and have 2" square tubular framing.
6. Provide with 1-1/4" SS-1 countertop with eased edges. Verify finish material with architectural specifications.
7. Provide all exposed surfaces with PL-1 applied over 3/4" industrial grade medium density fiberboard. Verify finish materials with architectural specifications.
8. Provide with adjustable shelves with premium grade plastic laminate over 3/4” industrial grade medium density fiberboard. Verify color and manufacturer with Architect.
9. Coordinate coving WB-1 (by G.C.) over 4" high 14 ga. stainless steel with tile backerboard in field with the General Contractor.
10. Verify and coordinate air circulation requirements for all drop-in equipment.
11. Provide penetrations in base for indirect waste piping coordinated with floor sink locations.
12. Provide chrome trim ring for piping at penetrations.
13. Foodservice Equipment Subcontractor shall verify and coordinate the fabrication with regard to delivery and access into building.

ITEM # 6A WATER FILTRATION SYSTEM

Quantity: One (1)
Manufacturer: 3M Purification (or equal by Optipure or Everpure)

1. Provide manufacturer's standard and the following:
2. One (1) 3M Purification Model 5624201 (DP290) 3M™ Dual Port Manifold System with Shut-Off Valve, 0.2 micron rating, 10 gpm (37.8 lpm) flow rate, 108,000 gal capacity, (1) 5613802 cartridge, reduces bacteria, sediment, chlorine taste & odor, cyst, scale, for multi-equipment combination applications, ncludes cartridge filter monitor
3. One (1) 3M Purification Model 5613802 (CARTPAK DP290) 3M™ Water Filtration Products - Replacement Cartridge Kit, 0.2 micron rating, 108,000 gal (408,823 lit) capacity, (2) 5613503 & (1) 5582113, reduces bacteria, sediment, chlorine taste & odor, cyst, scale, for 5624201 manifold system, cartridges include cartridge filter monitor
4. Coordinate installation with Item No's 9, 9A, 10 & 14A - Soda/Ice Dispenser, Ice Cuber, Juice Dispenser and Pot Filler.

ITEM # 7 UNDERCOUNTER REFRIGERATOR - BY OWNER

Quantity: One (1)
Manufacturer: True Manufacturing Co., Inc.
Model: TUC-27G-HC~FGD01

1. One (1) Model TUC-27G-HC~FGD01 Undercounter Refrigerator, 33-38° F, framed glass door version 01, stainless steel top & sides, (1) Low-E glass door, (2) shelves, clear coated aluminum interior with stainless steel floor, 5" castors, LED interior lighting, front breathing, R290 Hydrocarbon refrigerant, 1/6 HP, 115v/60/1, 2.0 amps, NEMA 5-15P, cULus, UL EPH Classified, MADE IN USA, ENERGY STAR®
2. All Owner Supplied equipment to be stored on site by Uconn. KEC will pick up equipment on campus, deliver to the site, uncrate, set in place level, provide all accessories to the owner or to appropriate trade for installation and remove/dispose of all packing/shipping material. General Contractor is to coordinate all work with the KEC and facilitate cooperation across all trades for a successful installation.
3. One (1) Self-contained refrigeration standard
4. One (1) 2-1/2" Castors, set of 4, in lieu of 5" castors

ITEM # 8 UNDERCOUNTER FREEZER - BY OWNER

Quantity: One (1)
Manufacturer: True Manufacturing Co., Inc.
Model: TUC-27F-LP-HC~SPEC1

1. One (1) Model TUC-27F-LP-HC~SPEC1 SPEC SERIES® Low Profile Undercounter Freezer, -10° F; SPEC Package 1 includes: 16-ga. stainless steel top, stainless steel sides & back, stainless steel interior, (1) heavy duty stainless steel door, steel handle, door lock standard, (2) shelves, electronic temperature control with digital temperature display; 1-1/2" diameter dual swivel castors, 31-7/8"H counter height, front breathing, R290 Hydrocarbon refrigerant, 1/4 HP, 115v/60/1, 2.3 amps, NEMA 5-15P, cULus, UL EPH Classified, CE, MADE IN USA, ENERGY STAR®
2. All Owner Supplied equipment to be stored on site by Uconn. KEC will pick up equipment on campus, deliver to the site, uncrate, set in place level, provide all accessories to the owner or to appropriate trade for installation and remove/dispose of all packing/shipping material. General Contractor is to

coordinate all work with the KEC and facilitate cooperation across all trades for a successful installation.
3. One (1) Self-contained refrigeration standard
4. One (1) 1-1/2" diameter dual wheel castors, standard

ITEM # 9 SODA/ ICE DISPENSER - BY VENDOR

Quantity: One (1)
Manufacturer: BY VENDOR
Model: BY VENDOR

1. By Vendor - Verify and coordinate all dimensions, details and utility requirements in the field with the GC/CM.
2. Coordinate installation with Item number 6A - Water Filtration System

ITEM # 9A ICE MACHINE - BY OWNER

Quantity: One (1)
Manufacturer: Manitowoc
Model: IY-0906A

1. One (1) Model IY-0906A Indigo™ Series Ice Maker, cube-style, air-cooled, self-contained condenser, 30"W x 24-1/2"D x 26-1/2"H, production capacity up to 901 lb.24 hours at 70°/50° (710 lb AHRI certified at 90°/70°), DuraTech™ exterior, half-dice size cubes, NSF, cULus, ENERGY STAR®
2. All Owner Supplied equipment to be stored on site by Uconn. KEC will pick up equipment on campus, deliver to the site, uncrate, set in place level, provide all accessories to the owner or to appropriate trade for installation and remove/dispose of all packing/shipping material. General Contractor is to coordinate all work with the KEC and facilitate cooperation across all trades for a successful installation.
3. KEC to verify ice machine is compatible with Item No. 9- Soda/Ice Dispenser and provide proper conversion kit as necessary.
4. Coordinate installation with Item No. 9 - Soda/Ice Dispenser
5. One (1) (-261) 208-230v/60/1-ph, 12.2 amps, standard
6. One (1) Model AR-20000 Arctic Pure® Primary Water Filter Assembly, includes head, shroud, hardware, mounting assembly, & (1) filter cartridge, 20,000 gallon capacity, 601-1,000 lbs./ice per day
7. One (1) Model K-00339 Replacement Water Filter Cartridge, for AR-20000 & AR-40000 filters (case of 6)

ITEM # 9B SODA SYSTEM <By Vendor>

Quantity: One (1)
Manufacturer: BY VENDOR
Model: BY VENDOR

1. By Vendor - Verify and coordinate all dimensions, details and utility requirements in the field with the General Contractor/Construction Manager.
2. Coordinate interconnection with Item 9 & 6A- Soda/ Ice Dispenser & Water Filtration System

ITEM # 10 JUICE DISPENSER - BY VENDOR

Quantity: One (1)
Manufacturer: BY VENDOR

Model: BY VENDOR

1. By Vendor - Verify and coordinate all dimensions, details and utility requirements in the field with the GC/CM.
2. Coordinate installation with Item number 6A - Water Filtration System

ITEM # 11 WALL CABINET

Quantity: Two (2)
Manufacturer: MILLWORK
Model: CUSTOM

1. Provide per Foodservice Millwork drawings and details and the following:
2. Verify and coordinate all finishes and hardware with the Architect.
3. Coordinate wall blocking by G.C.
4. Cabinets shall be installed at 52" A.F.F. to bottom of cabinet.
5. All exposed exterior surfaces on cabinet body shall be PL-1 applied over industrial grade medium density fiberboard. Verify color and manufacturer with Architect.
6. All exposed interior surfaces on cabinet body shall be premium grade plastic laminate. Verify color and manufacturer with Architect.
7. Cabinet body and doors shall be constructed of ¾" industrial grade medium density fiberboard.
8. Cabinet shall have adjustable shelves with premium grade plastic laminate over ¾" furniture grade plywood. Verify color and manufacturer with Architect.
9. Foodservice Equipment Subcontractor shall verify and coordinate the fabrication with regard to delivery and access into building.

ITEM # 12 MICROWAVE OVEN - BY OWNER

Quantity: One (1)
Manufacturer: ACP
Model: RMS10DS

1. One (1) Model RMS10DS Amana® Commercial Microwave Oven, 0.8 cu ft. capacity, 1000 watts, low volume, interlock safety switch, 6-minute light up dial timer, audible end of cycle signal, (1) power level, side hinged door with tempered glass, accommodates 12" plate, stainless steel exterior, 120v/60/1-ph, 13.0 amps, 15 MCA, 1500 total watts, NEMA 5-15P, cULus, ETL-Sanitation
2. All Owner Supplied equipment to be stored on site by Uconn. KEC will pick up equipment on campus, deliver to the site, uncrate, set in place level, provide all accessories to the owner or to appropriate trade for installation and remove/dispose of all packing/shipping material. General Contractor is to coordinate all work with the KEC and facilitate cooperation across all trades for a successful installation.
3. One (1) Model CK10 Cleaning Kit, sample size, includes (1) 2 oz. bottle oven cleaner and (1) 2 oz. bottle oven shield protectant, suitable for all ACP Inc. ovens (shipped in USA Only)

ITEM # 13 4-SLOT TOASTER - BY OWNER

Quantity: One (1)
Manufacturer: Waring
Model: WCT810

1. One (1) Model WCT810 Commercial Toaster, heavy-duty, (2) 1-1/8" & (2) 1-1/2" slots, (4) slice capacity (up to 300 slices/hr), (2) rotary dial to adjust browning controls, removable crumb tray, carriage

control levers, replaceable industrial heating plates, brushed stainless steel finish, NEMA 5-20P, 120v/50/60/1-ph, 2025 watts, cETLus, NSF
2. All Owner Supplied equipment to be stored on site by Uconn. KEC will pick up equipment on campus, deliver to the site, uncrate, set in place level, provide all accessories to the owner or to appropriate trade for installation and remove/dispose of all packing/shipping material. General Contractor is to coordinate all work with the KEC and facilitate cooperation across all trades for a successful installation.

ITEM # 14 INFUSED WATER DISPENSER - BY OWNER

Quantity: Two (2)
Manufacturer: BY OWNER
Model: BY OWNER

1. By Owner - Verify and coordinate all dimensions, details and utility requirements in the field with the GC/CM.
2. All Owner Supplied equipment to be stored on site by Uconn. KEC will pick up equipment on campus, deliver to the site, uncrate, set in place level, provide all accessories to the owner or to appropriate trade for installation and remove/dispose of all packing/shipping material. General Contractor is to coordinate all work with the KEC and facilitate cooperation across all trades for a successful installation.

ITEM # 14A POT FILLER - BY OWNER

Quantity: One (1)
Manufacturer: Kohler
Model: K-99270

1. Provide manufacturer's standard.
2. All Owner Supplied equipment to be stored on site by Uconn. KEC will pick up equipment on campus, deliver to the site, uncrate, set in place level, provide all accessories to the owner or to appropriate trade for installation and remove/dispose of all packing/shipping material. General Contractor is to coordinate all work with the KEC and facilitate cooperation across all trades for a successful installation.
3. Coordinate mounting height with Item No. 14 - Infused Water Dispensers

ITEM # 15 DROP-IN GLASS RACK DISPENSER

Quantity: One (1)
Manufacturer: Delfield (or equal by Piper or Caddy)
Model: LT-2020

1. One (1) Model LT-2020 Dispenser, Tray, open frame drop-in design, single self-leveling tray platform, for 20" x 21" trays, (22-3/4" x 26" cutout required), NSF
2. Coordinate installation with Item No. 6 - Cereal/Cold Beverage/Gluten Free Counter
3. Verify tray size with owner prior to ordering.

ITEM # 16 MILK DISPENSER - BY OWNER

Quantity: One (1)
Manufacturer: Silver King
Model: SKMAJ3/C3

1. One (1) Model SKMAJ3/C3 Majestic Series Milk Dispenser, triple valve, refrigerated, accommodates 3, 5, or 6 gallon bags, includes (3) platforms, (3) crates, & shipboard legs, 1/8 HP, 115v/60/1-ph, 1.9 amps
2. All Owner Supplied equipment to be stored on site by Uconn. KEC will pick up equipment on campus, deliver to the site, uncrate, set in place level, provide all accessories to the owner or to appropriate trade for installation and remove/dispose of all packing/shipping material. General Contractor is to coordinate all work with the KEC and facilitate cooperation across all trades for a successful installation.

ITEM # 17 CEREAL DISPENSER - BY OWNER

Quantity: Four (4)
Manufacturer: Server Products
Model: 88740

1. Four (4) Model 88740 SLIMLINE™ DFD 2L DRY FOOD DISPENSER, triple, (3) clear 2L hopper displays contents & level, serve preset portions of candies, toppings & mix-in ingredients, accurate dispensing at 1/2, 3/4, 1 or 1-1/2 oz. portions, ADA compliant (does not require a twisting wrist motion or tight grasping to dispense), includes stainless steel stand with drip tray, BPA Free container, NSF
2. All Owner Supplied equipment to be stored on site by Uconn. KEC will pick up equipment on campus, deliver to the site, uncrate, set in place level, provide all accessories to the owner or to appropriate trade for installation and remove/dispose of all packing/shipping material. General Contractor is to coordinate all work with the KEC and facilitate cooperation across all trades for a successful installation.

ITEM # 18 SALAD BAR

Quantity: One (1)
Manufacturer: MILLWORK
Model: CUSTOM

1. Provide as per Foodservice Millwork Drawings and Details and the following:
2. Verify and coordinate all finishes and hardware with the Architect.
3. Verify and coordinate air circulation requirements for all drop-in equipment.
4. Provide penetrations in base for indirect waste piping coordinated with floor sink locations.
5. Coordinate coving of finish floor material up to base in field with the General Contractor/Construction Manager.
6. KEC to provide protection between equipment and countertop from hot and cold temperature fluctuations, as per detail M1-1 on sheet K-502
7. Counter shall be constructed entirely of stainless steel and have 2" square tubular framing.
8. Provide with 1-1/4" SS-1 countertop with eased edges. Verify finish material with architectural specifications.
9. Provide all exposed surfaces with PL-1 applied over 3/4" industrial grade medium density fiberboard. Verify finish materials with architectural specifications.
10. Coordinate coving WB-1 (by G.C.) over 4" high 14 ga. stainless steel with tile backerboard in field with the General Contractor.
11. Foodservice Equipment Subcontractor shall verify and coordinate the fabrication with regard to delivery and access into building.

ITEM # 19 COLD FOOD WELLS

Quantity: Two (2)

Manufacturer: Randell (or equal by Atlas Metal or Delfield)
Model: 9986SCA

1. Two (2) Model 9986SCA Drop-In Cold Food Unit, refrigerated, 82-1/8" L, 26" W, 6-pan size, insulated pan, stainless steel inner liner & top, corrosion resistant steel exterior, swivel base condensing unit, 1/4 HP, NSF 7, cUL, UL, Made in USA
2. KEC shall coordinate the installation of easily accessible shut off valves on the indirect waste line from the equipment in the field with the General Contractor and/ or Plumbing Contractor. All shut off valves shall be easily accessible to the operator and installed as close to the front of the drop-in equipment as possible to prevent the operator from having to climb under the equipment to open and close the shut off valve.
3. Coordinate installation with Item No. 18 - Salad Bar
4. Two (2) Randell 115v/60/1-ph, 5.0 amps, 8' cord, NEMA 5-15P, standard
5. Two (2) Randell Model DISWTRCK Remote on/off switch, 8' cord, NEMA 5-15P
6. Two (2) Randell Model DISSLOUVERS 3 Sided louvered enclosure on compressor housing
7. Twenty (20) Randell Model DIADBR20 Adapter Bar, 20"

ITEM # 20 SNEEZE GUARD WITH LIGHT - BY OWNER

Quantity: One (1)
Manufacturer: English Manufacturing
Model: CUSTOM

1. **One (1) Model CUSTOM Provide as per English Manufacturing custom shop drawings and the following:**
2. **English Manufacturing shall confirm all sneeze guards meet NSF requirements prior to fabrication and installation of sneeze guards on site. All sneeze guards shall stay within minimum NSF requirements to avoid excessive customer reach to access food under sneeze guards.**
3. **All Owner Supplied equipment to be stored on site by Uconn. KEC will pick up equipment on campus, deliver to the site, uncrate, set in place level, provide all accessories to the owner or to appropriate trade for installation and remove/dispose of all packing/shipping material. General Contractor is to coordinate all work with the KEC and facilitate cooperation across all trades for a successful installation.**
4. **Provide as per Detail F2-66 on Sheet K4.6**
5. **Provide with black powder coat finish.**
6. **Coordinate installation with Item No. 18 - Salad Bar**

~~ITEM # 20 SNEEZE GUARD WITH LIGHT - BY OWNER~~

~~Quantity: One (1)~~
~~Manufacturer: English Manufacturing~~
~~Model: CUSTOM~~

1. ~~Sneezeguard: Includes (1) 1/2" tempered glass RIGHT end panel, (1) 1/2" tempered glass LEFT end panel, LED lights installed in a housing with a remote ballast. Requires location, wiring and installation by others in the field., Lights in One Row, Unit shipped fully assembled. Field splice required due to length or shape of unit. Does not include HEAT LAMPS.~~
2. ~~All Owner Supplied equipment to be stored on site by Uconn. KEC will pick up equipment on campus, deliver to the site, uncrate, set in place level, provide all accessories to the owner or to appropriate trade for installation and remove/dispose of all packing/shipping material. General Contractor is to coordinate all work with the KEC and facilitate cooperation across all trades for a successful installation.~~
3. ~~Provide as per custom shop drawings.~~
4. ~~Coordinate installation with Item No. 18 - Salad Bar~~

ITEM # 21 DUAL COFFEE BREWER - BY OWNER

Quantity: One (1)
Manufacturer: BUNN
Model: 20900.0010

1. One (1) Model 20900.0010 20900.0010 Dual® Coffee Brewer, Portable, mechanical thermostat, brews 16.3 gallons per hour capacity, stainless steel funnel, 3 batch-size settings, electronic timer & grinder interface, upper hot water faucet, variable water bypass, includes (2) GPR servers (20950.0004), 4" black adjustable legs, 120/208v/60/1-ph, 5990 watts, 28.6 amps, UL, NSF
2. All Owner Supplied equipment to be stored on site by Uconn. KEC will pick up equipment on campus, deliver to the site, uncrate, set in place level, provide all accessories to the owner or to appropriate trade for installation and remove/dispose of all packing/shipping material. General Contractor is to coordinate all work with the KEC and facilitate cooperation across all trades for a successful installation.
3. One (1) Equipment discount category net prices must be rounded to the nearest dollar
4. Coordinate installation with Item number 1A - Water Filtration System

ITEM # 22 COFFEE GRINDER - BY OWNER

Quantity: One (1)
Manufacturer: BUNN
Model: 05800.0003

1. One (1) Model 05800.0003 05800.0003 G9T HD Coffee Grinder, portion control, single 9 lb hopper, stainless decor, accepts large brew funnels for System III, Dual & other large Bunn® Brewers, 3/4 HP, 120v/60/1-ph, 9.4amps, NEMA 5-15P, cord attached, UL, ETL
2. All Owner Supplied equipment to be stored on site by Uconn. KEC will pick up equipment on campus, deliver to the site, uncrate, set in place level, provide all accessories to the owner or to appropriate trade for installation and remove/dispose of all packing/shipping material. General Contractor is to coordinate all work with the KEC and facilitate cooperation across all trades for a successful installation.
3. One (1) Equipment discount category net prices must be rounded to the nearest dollar

ITEM # 23 SPARE NUMBER

ITEM # 24 SOUP WELL

Quantity: One (1)
Manufacturer: Wells (or equal by APW Wyott or Vollrath)
Model: SS-10TDU

1. One (1) Model SS-10TDU Food Warmer, top-mount, built-in, electric, for 11 quart round inserts, drain, wet/dry operation, thermostatic controls, non-insulated, stainless steel interior, Wellslok, UL, cULus, NSF
2. KEC shall coordinate the installation of easily accessible shut off valves on the indirect waste line from the equipment in the field with the General Contractor and/ or Plumbing Contractor. All shut off valves shall be easily accessible to the operator and installed as close to the front of the drop-in equipment as possible to prevent the operator from having to climb under the equipment to open and close the shut off valve.
3. Coordinate installation with Item No. 18 - Salad Bar
4. One (1) Wells 120v/60/1-ph, 825 watts, direct
5. One (1) Wells Model 21057 Round Inset, 11 quart, with hinged lid, no handles

6. One (1) Wells Model 21860 Soup Ladle, 8 oz.
7. One (1) Wells Model 20385 Drain Valve Extension Kit, extension from drain to counter front with remote handle (for use with "D" models only) excluding DM models

ITEM # 25 SOUP WELL

Quantity: One (1)
Manufacturer: Wells (or equal by APW Wyott or Vollrath)
Model: SS-10TDU

1. One (1) Model SS-10TDU Food Warmer, top-mount, built-in, electric, for 11 quart round inserts, drain, wet/dry operation, thermostatic controls, non-insulated, stainless steel interior, Wellslok, UL, cULus, NSF
2. KEC shall coordinate the installation of easily accessible shut off valves on the indirect waste line from the equipment in the field with the General Contractor and/ or Plumbing Contractor. All shut off valves shall be easily accessible to the operator and installed as close to the front of the drop-in equipment as possible to prevent the operator from having to climb under the equipment to open and close the shut off valve.
3. Coordinate installation with Item No. 18 - Salad Bar
4. One (1) Wells 120v/60/1-ph, 825 watts, direct
5. One (1) Wells Model 21057 Round Inset, 11 quart, with hinged lid, no handles
6. One (1) Wells Model 21860 Soup Ladle, 8 oz.
7. One (1) Wells Model 20385 Drain Valve Extension Kit, extension from drain to counter front with remote handle (for use with "D" models only) excluding DM models

ITEM # 26 RICE COOKER - BY OWNER

Quantity: One (1)
Manufacturer: Town Equipment
Model: 56822

1. One (1) Model 56822 RiceMaster® Rice Cooker/Warmer/Steamer, electric, 25 cup uncooked capacity, one touch, auto cook/hold, cooks in 31 minutes, 120v/60/1-ph, 14 amps, 1700 watts, ETL, NSF
2. All Owner Supplied equipment to be stored on site by Uconn. KEC will pick up equipment on campus, deliver to the site, uncrate, set in place level, provide all accessories to the owner or to appropriate trade for installation and remove/dispose of all packing/shipping material. General Contractor is to coordinate all work with the KEC and facilitate cooperation across all trades for a successful installation.

ITEM # 27 CUSTOM BREAD DISPLAY SHELF

Quantity: One (1)
Manufacturer: BY ARCHITECT
Model: CUSTOM

1. One (1) Model CUSTOM CUSTOM BREAD DISPLAY SHELF TO BE PROVIDED BY ARCHITECT.

~~ITEM # 27 CUSTOM BREAD DISPLAY SHELF~~

~~Quantity: One (1)~~
~~Manufacturer: MILLWORK~~
~~Model: CUSTOM~~

1. ~~One (1) Model CUSTOM Provide as per Foodservice Millwork Drawings and Details and the following:~~
2. ~~Verify and coordinate all finishes and hardware with the Architect.~~
3. ~~Provide with 1-1/4" SS-1 plate shelf with eased edges. Verify finish material with architectural specifications.~~
4. ~~Provide all exposed surfaces with PL-1 applied over 3/4" industrial grade medium density fiberboard. Verify finish materials with architectural specifications.~~
5. ~~Provide with adjustable shelf with PL-1 applied over 3/4" industrial grade medium density fiberboard. Verify color and manufacturer with Architect.~~
6. ~~Coordinate coving WB-1 (by G.C.) over 4" high 14 ga. stainless steel with tile backerboard in field with the General Contractor.~~
7. ~~Foodservice Equipment Subcontractor shall verify and coordinate the fabrication with regard to delivery and access into building.~~

ITEM # 28 DELI COUNTER

Quantity: One (1)
Manufacturer: MILLWORK
Model: CUSTOM

1. One (1) Model CUSTOM Provide per Foodservice Millwork drawings and details and the following:
2. Verify and coordinate all finishes and hardware with the Architect.
3. Verify and coordinate air circulation requirements for all drop-in equipment.
4. Provide penetrations in base for indirect waste piping coordinated with floor sink locations.
5. Coordinate coving of finish floor material up to base in field with the General Contractor/Construction Manager.
6. KEC to provide protection between equipment and countertop from hot and cold temperature fluctuations, as per detail M1-1 on sheet K-502
7. Counter shall be constructed entirely of stainless steel and have 2" square tubular framing.
8. Provide with 1-1/4" SS-1 solid surface countertop with eased edges. Verify finish material with architectural specifications.
9. Provide all exposed surfaces with PL-1 laminate applied over 3/4" industrial grade medium density fiberboard. Verify finish materials with architectural specifications.
10. Provide with adjustable shelves with premium grade plastic laminate over 3/4” industrial grade medium density fiberboard. Verify color and manufacturer with Architect.
11. Coordinate WB-1 tile base (by G.C.) over 4" high 14 ga. stainless steel with tile backerboard in field with the General Contractor.
12. Foodservice Equipment Subcontractor shall verify and coordinate the fabrication with regard to delivery and access into building.

ITEM # 29 CONVEYOR TOASTER - BY OWNER

Quantity: One (1)
Manufacturer: Hatco
Model: TQ-1800

1. One (1) Model TQ-1800 Toast-Qwik® Conveyor Toaster, horizontal conveyor, countertop design, all bread types toaster, approximately 30 slices capacity/min, 2" opening height, electronic controls, colorguard sensing system, cULus, UL EPH Classified, ANSI/NSF 4, Made in USA
2. All Owner Supplied equipment to be stored on site by Uconn. KEC will pick up equipment on campus, deliver to the site, uncrate, set in place level, provide all accessories to the owner or to appropriate trade for installation and remove/dispose of all packing/shipping material. General Contractor is to coordinate all work with the KEC and facilitate cooperation across all trades for a successful installation.

3. One (1) 208v/60/1-ph, 4.4kw, 21.4 amps, NEMA 6-30P
4. One (1) Model TQ-PWR-A Automatic Power Save Mode (switches to power save mode after 30 minutes of inactivity) (Available at time of purchase only)

ITEM # 30 HOT/COLD FOOD WELLS

Quantity: One (1)
Manufacturer: Randell (or equal by Atlas Metal or Delfield)
Model: 95802-208Z

1. One (1) Model 95802-208Z Drop-In Hot/Cold Food Unit, electric, (2) 12" x 20" pan size, switch for hot or cold operation, common waterbath, thermostatic controls, stainless steel top corrosion resistant steel exterior, drain & gate valve, 1/4 HP, 120/208v/60/1, 1.1 kw, cUL, UL, NSF, Made in USA
2. KEC shall coordinate the installation of easily accessible shut off valves on the indirect waste line from the equipment in the field with the General Contractor and/ or Plumbing Contractor. All shut off valves shall be easily accessible to the operator and installed as close to the front of the drop-in equipment as possible to prevent the operator from having to climb under the equipment to open and close the shut off valve.
3. Coordinate installation with Item No. 28 - Deli Counter
4. One (1) Randell Model DIADBR20 Adapter Bar, 20"
5. Two (2) Randell Model DIADBR12 Adapter Bar, 12"
6. One (1) Randell Model DISSLOUVERS 3 sided louvered enclosure on compressor housing
7. One (1) Randell Model DISWTRCK Remote on/off switch with 8' cord.
8. One (1) Randell Model DICTREXT Extended lead for control.

ITEM # 31 SPARE NUMBER

ITEM # 32 SPARE NUMBER

ITEM # 33 SPARE NUMBER

ITEM # 34 SNEEZE GUARD WITH HEAT AND LIGHT - BY OWNER

Quantity: One (1)
Manufacturer: English Manufacturing
Model: CUSTOM

1. **One (1) Model CUSTOM Provide as per English Manufacturing custom shop drawings and the following:**
2. **English Manufacturing shall confirm all sneeze guards meet NSF requirements prior to fabrication and installation of sneeze guards on site. All sneeze guards shall stay within minimum NSF requirements to avoid excessive customer reach to access food under sneeze guards.**
3. **All Owner Supplied equipment to be stored on site by Uconn. KEC will pick up equipment on campus, deliver to the site, uncrate, set in place level, provide all accessories to the owner or to appropriate trade for installation and remove/dispose of all packing/shipping material. General Contractor is to coordinate all work with the KEC and facilitate cooperation across all trades for a successful installation.**
4. **Provide as per detail F2-70 on sheet K4.6**
5. **Provide with black powder coat finish.**
6. **Coordinate installation with Item No. 28 - Deli Counter**

~~ITEM # 34 SNEEZE GUARD WITH HEAT AND LIGHT - BY OWNER~~

~~Quantity: One (1)~~
~~Manufacturer: English Manufacturing~~
~~Model: CUSTOM~~

1. ~~Sneezeguard: Includes custom Rect - 1-1/2" x 1-1/2" S/S "T" Posts with end caps - Posts 18" high, 1/2" tempered glass Top panels 20" wide, and 5" Wide Front Glass, (1) 1/2" tempered glass RIGHT end panel, (1) 1/2" tempered glass LEFT end panel, LED lights installed in a housing with a remote. Requires location, wiring and installation by others in the field., warmer(s) are 120V, include decorative housing(s) and are supplied with remote infinite control(s) to be installed in the field by others, Unit shipped fully assembled.~~
2. ~~All Owner Supplied equipment to be stored on site by Uconn. KEC will pick up equipment on campus, deliver to the site, uncrate, set in place level, provide all accessories to the owner or to appropriate trade for installation and remove/dispose of all packing/shipping material. General Contractor is to coordinate all work with the KEC and facilitate cooperation across all trades for a successful installation.~~
3. ~~Provide as per custom shop drawings.~~
4. ~~Coordinate installation with Item No. 28 - Deli Counter~~

ITEM # 35 COLD FOOD WELLS

Quantity: One (1)
Manufacturer: Randell (or equal by Atlas Metal or Delfield)
Model: 9957SCA

1. One (1) Model 9957SCA Drop-In Cold Food Unit, refrigerated, 56-1/4" L, 26" W, 4-pan size, insulated pan, stainless steel inner liner & top, corrosion resistant steel exterior, swivel base condensing unit, 1/4 HP, NSF 7, cUL, UL, Made in USA
2. KEC shall coordinate the installation of easily accessible shut off valves on the indirect waste line from the equipment in the field with the General Contractor and/ or Plumbing Contractor. All shut off valves shall be easily accessible to the operator and installed as close to the front of the drop-in equipment as possible to prevent the operator from having to climb under the equipment to open and close the shut off valve.
3. Coordinate installation with Item No. 28 - Deli Counter
4. One (1) Randell 115v/60/1-ph, 5.0 amps, 8' cord, NEMA 5-15P, standard
5. One (1) Randell Model DISWTRCK Remote on/off switch, 8' cord, NEMA 5-15P
6. Three (3) Randell Model DIADBR20 Adapter Bar, 20"
7. Four (4) Randell Model DIADBR12 Adapter Bar, 12"
8. One (1) Randell Model DISSLOUVERS 3 Sided louvered enclosure on compressor housing

ITEM # 36 SNEEZE GUARD WITH LIGHT - BY OWNER

Quantity: One (1)
Manufacturer: English Manufacturing
Model: CUSTOM

1. **One (1) Model CUSTOM Provide as per English Manufacturing custom shop drawings and the following:**
2. **English Manufacturing shall confirm all sneeze guards meet NSF requirements prior to fabrication and installation of sneeze guards on site. All sneeze guards shall stay within minimum NSF requirements to avoid excessive customer reach to access food under sneeze guards.**
3. **All Owner Supplied equipment to be stored on site by Uconn. KEC will pick up equipment on campus, deliver to the site, uncrate, set in place level, provide all accessories to the**

owner or to appropriate trade for installation and remove/dispose of all packing/shipping material. General Contractor is to coordinate all work with the KEC and facilitate cooperation across all trades for a successful installation.

4. Provide as per detail F2-70A on sheet K4.6
5. Provide with black powder coat finish.
6. Coordinate installation with Item No. 28 - Deli Counter

~~ITEM # 36 SNEEZE GUARD WITH HEAT AND LIGHT - BY OWNER <included in Item No. 34>~~

~~Quantity: One (1)~~
~~Manufacturer: English Manufacturing~~
~~Model: CUSTOM~~

~~1. One (1) Model CUSTOM Sneezeguard: Includes custom Rect - 1-1/2" x 1-1/2" S/S "T" Posts with end caps - Posts 18" high, 1/2" tempered glass Top panels 20" wide, and 5" Wide Front Glass, (1) 1/2" tempered glass RIGHT end panel, (1) 1/2" tempered glass LEFT end panel, LED lights installed in a housing with a remote. Requires location, wiring and installation by others in the field., warmer(s) are 120V, include decorative housing(s) and are supplied with remote infinite control(s) to be installed in the field by others, Unit shipped fully assembled.~~
~~2. All Owner Supplied equipment to be stored on site by Uconn. KEC will pick up equipment on campus, deliver to the site, uncrate, set in place level, provide all accessories to the owner or to appropriate trade for installation and remove/dispose of all packing/shipping material. General Contractor is to coordinate all work with the KEC and facilitate cooperation across all trades for a successful installation.~~
~~3. Provide as per custom shop drawings.~~
~~4. Coordinate installation with Item No. 28 - Deli Counter~~

ITEM # 37 PANINI GRILL - BY OWNER

Quantity: One (1)
Manufacturer: Equipex
Model: PANINI VC

1. One (1) Model PANINI VC Sodir Panini Grill, heavy duty vitroceramic grooved top & smooth bottom griddle plates, 13"W x 11"D grill area, counterbalanced top, front drip tray, stainless steel construction, 570°F thermostatic controls, 120v/60/1-ph, 14.0 amps, 1.8 kW, NEMA 5-15P, UL
2. All Owner Supplied equipment to be stored on site by Uconn. KEC will pick up equipment on campus, deliver to the site, uncrate, set in place level, provide all accessories to the owner or to appropriate trade for installation and remove/dispose of all packing/shipping material. General Contractor is to coordinate all work with the KEC and facilitate cooperation across all trades for a successful installation.
3. One (1) Grooved top & smooth bottom plates, standard

ITEM # 38 CONDIMENT DISPENSER - BY OWNER <By Owner>

Quantity: Five (5)
Manufacturer: BY OWNER
Model: BY OWNER

1. Five (5) Model BY OWNER By Owner - Verify and coordinate all dimensions, details and utility requirements in the field with the GC/CM.
2. All Owner Supplied equipment to be stored on site by Uconn. KEC will pick up equipment on campus, deliver to the site, uncrate, set in place level, provide all accessories to the owner or to appropriate trade for installation and remove/dispose of all packing/shipping material. General Contractor is to

coordinate all work with the KEC and facilitate cooperation across all trades for a successful installation.

ITEM # 39 ACTION COUNTER

Quantity: One (1)
Manufacturer: MILLWORK
Model: CUSTOM

1. Provide as per Foodservice Millwork Drawings and Details and the following:
2. Verify and coordinate all finishes and hardware with the Architect.
3. Verify and coordinate air circulation requirements for all drop-in equipment.
4. Provide penetrations in base for indirect waste piping coordinated with floor sink locations.
5. Coordinate coving of finish floor material up to base in field with the General Contractor/Construction Manager.
6. KEC to provide protection between equipment and countertop from hot and cold temperature fluctuations, as per detail M1-1 on sheet K-502
7. Counter shall be constructed entirely of stainless steel and have 2" square tubular framing.
8. Provide with 1-1/4" SS-1 solid surface countertop with eased edges. Verify finish material with architectural specifications.
9. Provide all exposed surfaces with PL-1 laminate applied over 3/4" industrial grade medium density fiberboard. Verify finish materials with architectural specifications.
10. Coordinate WB-1 tile base (by G.C.) over 4" high 14 ga. stainless steel with tile backerboard in field with the General Contractor.
11. Foodservice Equipment Subcontractor shall verify and coordinate the fabrication with regard to delivery and access into building.

ITEM # 40 UNDERCOUNTER HEATED CABINET - BY OWNER

Quantity: One (1)
Manufacturer: Cres Cor
Model: H-137-SUA-5D

1. One (1) Model H-137-SUA-5D Cabinet, Mobile Heated, undercounter, insulated, top-mount heater assembly, magnetic latch, (5) sets of chrome plated wire universal angles on 4-1/2" centers adjustable 1-1/2" centers, field reversible door, solid state electronic control, LED digital display, (4) 2-1/2" swivel casters (2) braked, anti-microbial latches, stainless steel construction, NSF, cCSAus
2. All Owner Supplied equipment to be stored on site by Uconn. KEC will pick up equipment on campus, deliver to the site, uncrate, set in place level, provide all accessories to the owner or to appropriate trade for installation and remove/dispose of all packing/shipping material. General Contractor is to coordinate all work with the KEC and facilitate cooperation across all trades for a successful installation.
3. Coordinate installation with Item No. 39 - Action Counter
4. One (1) 120v/60/1-ph, 1000 w, 8.0 amp, 10 ft. power cord, standard

ITEM # 41 SPARE NUMBER

ITEM # 42 SPARE NUMBER

ITEM # 43 SPARE NUMBER

ITEM # 44 HOT/COLD FOOD WELLS

Quantity: One (1)
Manufacturer: Randell (or equal by Atlas Metal or Delfield)
Model: 95803-208Z

1. One (1) Model 95803-208Z Drop-In Hot/Cold Food Unit, electric, (3) 12" x 20" pan size, switch for hot or cold operation, common waterbath, thermostatic controls, stainless steel top corrosion resistant steel exterior, drain & gate valve, 1/4 HP, 120/208v/60/1, 2.2 kw, cUL, UL, NSF, Made in USA
2. KEC shall coordinate the installation of easily accessible shut off valves on the indirect waste line from the equipment in the field with the General Contractor and/ or Plumbing Contractor. All shut off valves shall be easily accessible to the operator and installed as close to the front of the drop-in equipment as possible to prevent the operator from having to climb under the equipment to open and close the shut off valve.
3. Coordinate installation with Item No. 39 - Action Counter
4. Two (2) Randell Model DIADBR20 Adapter Bar, 20"
5. Three (3) Randell Model DIADBR12 Adapter Bar, 12"
6. One (1) Randell Model DISSLOUVERS 3 sided louvered enclosure on compressor housing
7. One (1) Randell Model DISWTRCK Remote on/off switch with 8' cord.
8. One (1) Randell Model DICTREXT Extended lead for control.

ITEM # 45 SNEEZE GUARD WITH HEAT AND LIGHT - BY OWNER

Quantity: One (1)
Manufacturer: English Manufacturing
Model: CUSTOM

1. One (1) Model CUSTOM Provide as per English Manufacturing custom shop drawings and the following:
2. English Manufacturing shall confirm all sneeze guards meet NSF requirements prior to fabrication and installation of sneeze guards on site. All sneeze guards shall stay within minimum NSF requirements to avoid excessive customer reach to access food under sneeze guards.
3. All Owner Supplied equipment to be stored on site by Uconn. KEC will pick up equipment on campus, deliver to the site, uncrate, set in place level, provide all accessories to the owner or to appropriate trade for installation and remove/dispose of all packing/shipping material. General Contractor is to coordinate all work with the KEC and facilitate cooperation across all trades for a successful installation.
4. Provide as per detail F2-70 on sheet K4.6
5. Provide with black powder coat finish.
6. Coordinate installation with Item No. 39 - Action Counter

~~ITEM # 45 SNEEZE GUARD WITH HEAT AND LIGHT - BY OWNER~~

~~Quantity: One (1)~~
~~Manufacturer: English Manufacturing~~
~~Model: CUSTOM~~

~~1. One (1) Model CUSTOM Sneezeguard: Includes custom Rect - 1-1/2" x 1-1/2" S/S "T" Posts with end caps - Posts 18" high, 1/2" tempered glass Top panels 20" wide, and 5" Wide Front Glass, (1) 1/2" tempered glass RIGHT end panel, (1) 1/2" tempered glass LEFT end panel, LED lights installed in a housing with a remote. Requires location, wiring and installation by others in the field., warmer(s) are 120V, include decorative housing(s) and are supplied with remote infinite control(s) to be installed in the field by others, Unit shipped fully assembled.~~

~~2. All Owner Supplied equipment to be stored on site by Uconn. KEC will pick up equipment on campus, deliver to the site, uncrate, set in place level, provide all accessories to the owner or to appropriate trade for installation and remove/dispose of all packing/shipping material. General Contractor is to coordinate all work with the KEC and facilitate cooperation across all trades for a successful installation.~~
~~3. Provide as per custom shop drawings.~~
~~4. Coordinate installation with Item No. 39 - Action Counter~~

ITEM # 46 6 BURNER RANGE - BY OWNER

Quantity: One (1)
Manufacturer: Jade Range
Model: JTRH-6

1. One (1) Model JTRH-6 Titan™ Heavy Duty Range, gas, 36", (6) 35,000 BTU open burners, infinite controls, cabinet base, stainless steel 6" plate shelf, front, sides, stub back & bottom, 6" adjustable legs, 210,000 BTU, CSAus, NSF
2. All Owner Supplied equipment to be stored on site by Uconn. KEC will pick up equipment on campus, deliver to the site, uncrate, set in place level, provide all accessories to the owner or to appropriate trade for installation and remove/dispose of all packing/shipping material. General Contractor is to coordinate all work with the KEC and facilitate cooperation across all trades for a successful installation.
3. One (1) NOTE: All units are fully welded with heavy duty construction, stainless steel sides, front and top are standard
4. One (1) NOTE: Stainless steel tray bed (burner box), deflectors, tray guides and drip tray/grease can standard
5. One (1) Two years part & labor warranty - Includes Five year warranty parts on oven door (parts only) & Ten year warranty on range frame (parts only), standard
6. One (1) Gas type to be specified
7. One (1) 3/4" Rear connection, standard
8. One (1) 3/4" Gas regulator supplied with range
9. One (1) Cap & stainless steel manifold cover, left
10. One (1) Cap & stainless steel manifold cover, right
11. One (1) No legs, to be factory mounted onto refrigerated base (must be ordered with Jade JRLH/JFLH series base)
12. Coordinate installation with Item No's 46A & 46B - Refrigerated Base and Countertop Charbroiler.

ITEM # 46A REFRIGERATED BASE - BY OWNER

Quantity: One (1)
Manufacturer: Jade Range
Model: JRLH-02S-T-60

1. One (1) Model JRLH-02S-T-60 Titan™ Fire & Ice™ Refrigerated Base, 60", self-contained, (2) 40-1/8" self-closing mega drawers, (6) 12" x 20" x 6" pan capacity (pans by others), face mounted dial thermometers, built-in condensate evaporator, stainless steel 6" adjustable legs, 12.6 amps, cETLus
2. All Owner Supplied equipment to be stored on site by Uconn. KEC will pick up equipment on campus, deliver to the site, uncrate, set in place level, provide all accessories to the owner or to appropriate trade for installation and remove/dispose of all packing/shipping material. General Contractor is to coordinate all work with the KEC and facilitate cooperation across all trades for a successful installation.
3. One (1) All units are fully welded with heavy duty construction, stainless steel sides and front are standard
4. One (1) 115v/60/1-ph, standard

5. Coordinate installation with Item No. 39 - Action Counter
6. Coordinate with installation of Item No's 46 & 46B - 6-Burner Range and Countertop Charbroiler

ITEM # 46B COUNTERTOP CHARBROILER - BY OWNER

Quantity: One (1)
Manufacturer: Jade Range
Model: JMRH-24B

1. One (1) Model JMRH-24B Titan™ Heavy Duty Range, gas, 24", modular, charbroiler, cast iron radiants & grate, infinite manual controls, (2) drip trays, stainless steel 6" plate shelf, front, sides, stub back & tray bed, 60,000 BTU, CSAus, NSF
2. All Owner Supplied equipment to be stored on site by Uconn. KEC will pick up equipment on campus, deliver to the site, uncrate, set in place level, provide all accessories to the owner or to appropriate trade for installation and remove/dispose of all packing/shipping material. General Contractor is to coordinate all work with the KEC and facilitate cooperation across all trades for a successful installation.
3. One (1) NOTE: All units are fully welded with heavy duty construction, stainless steel sides, front and top are standard
4. One (1) NOTE: Stainless steel tray bed (burner box), deflectors, tray guides and drip tray/grease can standard
5. One (1) Gas type to be specified
6. One (1) 3/4" Rear connection, standard
7. One (1) 3/4" Gas regulator supplied with range
8. One (1) Cap & stainless steel manifold cover, left
9. One (1) Cap & stainless steel manifold cover, right
10. One (1) No legs, to be factory mounted onto refrigerated base (must be ordered with Jade JRLH/JFLH series base)
11. Coordinate installation with Item No's 46 & 46A - 6-Burner Range and Refrigerated Base

ITEM # 47 VERTICAL SNEEZE GUARD - BY OWNER

Quantity: One (1)
Manufacturer: English Manufacturing
Model: CUSTOM

1. **One (1) Model CUSTOM Provide as per English Manufacturing custom shop drawings and the following:**
2. **English Manufacturing shall confirm all sneeze guards meet NSF requirements prior to fabrication and installation of sneeze guards on site. All sneeze guards shall stay within minimum NSF requirements to avoid excessive customer reach to access food under sneeze guards.**
3. **All Owner Supplied equipment to be stored on site by Uconn. KEC will pick up equipment on campus, deliver to the site, uncrate, set in place level, provide all accessories to the owner or to appropriate trade for installation and remove/dispose of all packing/shipping material. General Contractor is to coordinate all work with the KEC and facilitate cooperation across all trades for a successful installation.**
4. **Provide as per detail F2-72 on sheet K4.6**
5. **Provide with black powder coat finish.**
6. **Coordinate installation with Item No. 39 - Action Counter**

~~ITEM # 47 VERTICAL SNEEZE GUARD - BY OWNER~~

~~Quantity: One (1)~~

~~Manufacturer: English Manufacturing~~
~~Model: CUSTOM~~

1. ~~Sneezeguard: Includes custom vertical Rect - 2" x 1" S/S "T" Posts VERTICAL Glass only - 1/2" tempered glass Front Panel Glass 20" wide - NO TOP GLASS, Unit shall be shipped knocked down to accommodate packing and shipping.~~
   ~~Some assembly is required on-site by others., Does not include Heat Lamps, Lights or End Panels~~
2. ~~All Owner Supplied equipment to be stored on site by Uconn. KEC will pick up equipment on campus, deliver to the site, uncrate, set in place level, provide all accessories to the owner or to appropriate trade for installation and remove/dispose of all packing/shipping material. General Contractor is to coordinate all work with the KEC and facilitate cooperation across all trades for a successful installation.~~
3. ~~Provide as per custom shop drawings.~~
4. ~~Coordinate installation with Item No. 39 - Action Counter~~

ITEM # 48 EXHAUST HOOD

Quantity: One (1)
Manufacturer: Halton (or equal by Gaylord or Avtec)
Model: KVR

1. Provide manufacturer's standard and the following:
2. Provide construction and insulation for 0" clearance on top, sides, rear and front of exhaust hood.
3. Provide Ansul pre-pipe to extent possible.
4. Provide unit with wall mounted light and fan switches.
5. Provide unit to meet all local, state and federal codes.
6. Provide steel hanger rods and brackets.
7. Provide stainless steel closure panels to ceiling on front and sides; verify ceiling height with the General Contractor.
8. Coordinate power shut-off and integration with building system by General Contractor.
9. Verify and coordinate the fabrication with regard to delivery and access into building.
10. Coordinate installation with Item No. 84 - Fire Suppression System.

ITEM # 49 DROP-IN HEATED SHELF

Quantity: One (1)
Manufacturer: Hatco (or equal by LTI or APW Wyott)
Model: GRSBF-42-I

1. One (1) Model GRSBF-42-I Glo-Ray® Built In Heated Shelf with Flush Top, 43-1/2" x 21" surface area, hardcoat aluminum top, control thermostat, illuminated on/off switch & mounting bracket, NSF, cUL, UL, UL EPH Classified, ANSI/NSF 4, CSA
2. One (1) Hatco 120v/60/1-ph, 885 watts, 7.4 amps, NEMA 5-15P (Domestic voltage), standard
3. One (1) Hatco NOTE: Recommended for use in metallic countertop, verify that the material is suitable for temperatures up to 200 degree F
4. One (1) Hatco Thermostat control with lighted rocker switch (Available at time of purchase only), standard

ITEM # 50 SNEEZE GUARD WITH HEAT AND LIGHT - BY OWNER

Quantity: One (1)
Manufacturer: English Manufacturing
Model: CUSTOM

1. **One (1) Model CUSTOM Provide as per English Manufacturing custom shop drawings and the following:**
2. **English Manufacturing shall confirm all sneeze guards meet NSF requirements prior to fabrication and installation of sneeze guards on site. All sneeze guards shall stay within minimum NSF requirements to avoid excessive customer reach to access food under sneeze guards.**
3. **All Owner Supplied equipment to be stored on site by Uconn. KEC will pick up equipment on campus, deliver to the site, uncrate, set in place level, provide all accessories to the owner or to appropriate trade for installation and remove/dispose of all packing/shipping material. General Contractor is to coordinate all work with the KEC and facilitate cooperation across all trades for a successful installation.**
4. **Provide as per detail F2-70 on sheet K4.6**
5. **Provide with black powder coat finish.**
6. **Coordinate installation with Item No. 39 - Action Counter**

~~ITEM # 50 SNEEZE GUARD WITH HEAT AND LIGHT - BY OWNER~~

~~Quantity: One (1)~~
~~Manufacturer: English Manufacturing~~
~~Model: CUSTOM~~

1. ~~Sneezeguard: Includes custom Rect - 1-1/2" x 1-1/2" S/S "T" Posts with end caps - Posts 18" high, 1/2" tempered glass Top panels 20" wide, and 5" Wide Front Glass, (1) 1/2" tempered glass RIGHT end panel, (1) 1/2" tempered glass LEFT end panel, LED lights installed in a housing with a remote. Requires location, wiring and installation by others in the field., warmer(s) are 120V, include decorative housing(s) and are supplied with remote infinite control(s) to be installed in the field by others, Unit shipped fully assembled.~~
2. ~~All Owner Supplied equipment to be stored on site by Uconn. KEC will pick up equipment on campus, deliver to the site, uncrate, set in place level, provide all accessories to the owner or to appropriate trade for installation and remove/dispose of all packing/shipping material. General Contractor is to coordinate all work with the KEC and facilitate cooperation across all trades for a successful installation.~~
3. ~~Provide as per custom shop drawings.~~
4. ~~Coordinate installation with Item No. 39 - Action Counter~~

ITEM # 51 WORK COUNTER W/ SINK AND HANDSINK

Quantity: One (1)
Manufacturer: Fabricator
Model: CUSTOM

1. Provide as per Foodservice Fabrication Drawings and Details and the following:
2. Provide unit with one (1) 21" x 21" x 9" deep sink.
3. One (1) T&S Brass Model B-0220-LN Deck Mixing Faucet, 8" centers on deck faucet with 1/2" IPS eccentric flanged female inlets, lever handles
4. One (1) T&S Brass Model 062X Swing Nozzle, 12"
5. One (1) T&S Brass Model B-0199-02F-03 Low Flow Aerator
6. One (1) T&S Brass Model B-3950 Waste Valve, twist handle, 3-1/2" sink opening, 2" drain outlet with 1-1/2" adapter (replaces B-3912, B-3916)
7. Provide unit with 10" x 14" x 5" deep handsink.
8. One (1) T&S Brass Model EC-3103-VF05 ChekPoint™ Electronic Faucet, deck mount, 4" center set, AC/DC control module, 0.5 GPM, vandalism resistant spray device, 100-240 VAC adapter
9. Provide electronic faucet with a 20-30 second run time.
10. KEC shall install T&S 0.5 GPM aerator on handsink faucet and turn 1.5 GPM aerator over to Owner.

11. Provide mixed water to be 110 degrees.
12. Provide unit with side splash 1/2" thick, 2'-0" long, 12" high the same material as countertop surface.
13. Foodservice Equipment Subcontractor shall verify and coordinate the fabrication with regard to delivery and access into building.

ITEM # 51A TOUCHLESS SOAP DISPENSER - BY OWNER

Quantity: One (1)
Manufacturer: GOJO Industries
Model: 2730-12

1. By Owner - Verify all details, dimensions and utility requirements in the field with the GC/CM.
2. All Owner Supplied equipment to be stored on site by Uconn. KEC will pick up equipment on campus, deliver to the site, uncrate, set in place level, provide all accessories to the owner or to appropriate trade for installation and remove/dispose of all packing/shipping material. General Contractor is to coordinate all work with the KEC and facilitate cooperation across all trades for a successful installation.
3. Coordinate wall blocking by General Contractor.

ITEM # 51B PAPER TOWEL DISPENSER - BY OWNER

Quantity: One (1)
Manufacturer: San Jamar (or equal by Hubert or Impact-Products)
Model: T1490TBK

1. By Owner - Verify all details, dimensions and utility requirements in the field with the GC/CM.
2. All Owner Supplied equipment to be stored on site by Uconn. KEC will pick up equipment on campus, deliver to the site, uncrate, set in place level, provide all accessories to the owner or to appropriate trade for installation and remove/dispose of all packing/shipping material. General Contractor is to coordinate all work with the KEC and facilitate cooperation across all trades for a successful installation.
3. Coordinate wall blocking by General Contractor.

ITEM # 52 UNDERCOUNTER REFRIGERATOR - BY OWNER

Quantity: One (1)
Manufacturer: True Manufacturing Co., Inc.
Model: TUC-36-LP-HC~SPEC1

1. One (1) Model TUC-36-LP-HC~SPEC1 SPEC SERIES® Low Profile Undercounter Refrigerator, 33-38° F; SPEC Package 1 includes: 16-ga. stainless steel top, stainless steel sides & back, stainless steel interior, (2) heavy duty stainless steel doors, steel handles, door lock standard, (4) shelves, electronic temperature control with digital temperature display; 1-1/2" diameter dual swivel castors, 31-7/8" counter height, front breathing, R290 Hydrocarbon refrigerant, 1/6 HP, 115v/60/1, 6.1 amps, NEMA 5-15P, cULus, UL EPH Classified, CE, MADE IN USA
2. All Owner Supplied equipment to be stored on site by Uconn. KEC will pick up equipment on campus, deliver to the site, uncrate, set in place level, provide all accessories to the owner or to appropriate trade for installation and remove/dispose of all packing/shipping material. General Contractor is to coordinate all work with the KEC and facilitate cooperation across all trades for a successful installation.
3. One (1) Self-contained refrigeration standard
4. One (1) 1-1/2" diameter dual wheel castors, standard
5. Coordinate installation with Item No. 51 - Work Table with Sink and Handsink

ITEM # 53 SPARE NUMBER

ITEM # 54 UNDERCOUNTER HEATED CABINET - BY OWNER

Quantity: One (1)
Manufacturer: Cres Cor
Model: H-137-SUA-5D

1. One (1) Model H-137-SUA-5D Cabinet, Mobile Heated, undercounter, insulated, top-mount heater assembly, magnetic latch, (5) sets of chrome plated wire universal angles on 4-1/2" centers adjustable 1-1/2" centers, field reversible door, solid state electronic control, LED digital display, (4) 2-1/2" swivel casters (2) braked, anti-microbial latches, stainless steel construction, NSF, cCSAus
2. All Owner Supplied equipment to be stored on site by Uconn. KEC will pick up equipment on campus, deliver to the site, uncrate, set in place level, provide all accessories to the owner or to appropriate trade for installation and remove/dispose of all packing/shipping material. General Contractor is to coordinate all work with the KEC and facilitate cooperation across all trades for a successful installation.
3. Coordinate installation with Item No. 39 - Action Counter
4. One (1) 120v/60/1-ph, 1000 w, 8.0 amp, 10 ft. power cord, standard

ITEM # 55 COMFORT COUNTER

Quantity: One (1)
Manufacturer: MILLWORK
Model: CUSTOM

1. Provide as per Foodservice Millwork Drawings and Details and the following:
2. Verify and coordinate all finishes and hardware with the Architect.
3. Verify and coordinate air circulation requirements for all drop-in equipment.
4. Provide penetrations in base for indirect waste piping coordinated with floor sink locations.
5. Coordinate coving of finish floor material up to base in field with the General Contractor/Construction Manager.
6. KEC to provide protection between equipment and countertop from hot and cold temperature fluctuations, as per detail M1-1 on sheet K-502
7. Counter shall be constructed entirely of stainless steel and have 2" square tubular framing.
8. Provide with 1-1/4" SS-1 solid surface countertop with eased edges. Verify finish material with architectural specifications.
9. Provide all exposed surfaces with PL-1 laminate applied over 3/4" industrial grade medium density fiberboard. Verify finish materials with architectural specifications.
10. Coordinate WB-1 tile base (by G.C.) over 4" high 14 ga. stainless steel with tile backerboard in field with the General Contractor.
11. Coordinate coving of finish floor material (by G.C.) up to base in field with the General Contractor.
12. Foodservice Equipment Subcontractor shall verify and coordinate the fabrication with regard to delivery and access into building.

ITEM # 56 HOT FOOD WELLS

Quantity: One (1)
Manufacturer: Randell (or equal by Atlas Metal or Delfield)
Model: 9560-3AWF

1. One (1) Model 9560-3AWF Drop-In Hot Food Unit, electric, (3) 12" x 20" pan size, auto-water fill, wet operation, individual thermostatic control, stainless steel top, corrosion resistant steel exterior, with drain and common gate valve, 3.3 kw, cUL, UL, NSF, Made in USA
2. KEC shall coordinate the installation of easily accessible shut off valves on the indirect waste line from the equipment in the field with the General Contractor and/ or Plumbing Contractor. All shut off valves shall be easily accessible to the operator and installed as close to the front of the drop-in equipment as possible to prevent the operator from having to climb under the equipment to open and close the shut off valve.
3. Coordinate installation with Item No. 55 - Comfort Counter
4. One (1) Randell 208v/60/1-ph, 15.9 amps, direct, standard
5. Three (3) Randell Model DIADBR12 Adapter Bar, 12"
6. Two (2) Randell Model DIADBR20 Adapter Bar, 20"

ITEM # 57 SNEEZE GUARD WITH HEAT AND LIGHT - BY OWNER

Quantity: One (1)
Manufacturer: English Manufacturing
Model: CUSTOM

1. **One (1) Model CUSTOM Provide as per English Manufacturing custom shop drawings and the following:**
2. **English Manufacturing shall confirm all sneeze guards meet NSF requirements prior to fabrication and installation of sneeze guards on site. All sneeze guards shall stay within minimum NSF requirements to avoid excessive customer reach to access food under sneeze guards.**
3. **All Owner Supplied equipment to be stored on site by Uconn. KEC will pick up equipment on campus, deliver to the site, uncrate, set in place level, provide all accessories to the owner or to appropriate trade for installation and remove/dispose of all packing/shipping material. General Contractor is to coordinate all work with the KEC and facilitate cooperation across all trades for a successful installation.**
4. **Provide as per detail F2-70 on sheet K4.6**
5. **Provide with black powder coat finish.**
6. **Coordinate installation with Item No. 55 - Comfort Counter**

~~ITEM # 57 SNEEZE GUARD WITH HEAT AND LIGHT - BY OWNER~~

~~Quantity: One (1)~~
~~Manufacturer: English Manufacturing~~
~~Model: CUSTOM~~

1. ~~Sneezeguard: Includes custom Rect - 1-1/2" x 1-1/2" S/S "T" Posts with end caps - Posts 18" high, 1/2" tempered glass Top panels 20" wide, and 5" Wide Front Glass, (1) 1/2" tempered glass RIGHT end panel, (1) 1/2" tempered glass LEFT end panel, LED lights installed in a housing with a remote. Requires location, wiring and installation by others in the field., warmer(s) are 120V, include decorative housing(s) and are supplied with remote infinite control(s) to be installed in the field by others, Unit shipped fully assembled.~~
2. ~~All Owner Supplied equipment to be stored on site by Uconn. KEC will pick up equipment on campus, deliver to the site, uncrate, set in place level, provide all accessories to the owner or to appropriate trade for installation and remove/dispose of all packing/shipping material. General Contractor is to coordinate all work with the KEC and facilitate cooperation across all trades for a successful installation.~~
3. ~~Provide as per custom shop drawings.~~
4. ~~Coordinate installation with Item No. 55 - Comfort Counter~~

ITEM # 58 HOT FOOD WELLS

Quantity: One (1)
Manufacturer: Randell (or equal by Atlas Metal or Delfield)
Model: 9560-3AWF

1. One (1) Model 9560-3AWF Drop-In Hot Food Unit, electric, (3) 12" x 20" pan size, auto-water fill, wet operation, individual thermostatic control, stainless steel top, corrosion resistant steel exterior, with drain and common gate valve, 3.3 kw, cUL, UL, NSF, Made in USA
2. KEC shall coordinate the installation of easily accessible shut off valves on the indirect waste line from the equipment in the field with the General Contractor and/ or Plumbing Contractor. All shut off valves shall be easily accessible to the operator and installed as close to the front of the drop-in equipment as possible to prevent the operator from having to climb under the equipment to open and close the shut off valve.
3. Coordinate installation with Item No. 55 - Comfort Counter
4. One (1) Randell 208v/60/1-ph, 15.9 amps, direct, standard
5. Three (3) Randell Model DIADBR12 Adapter Bar, 12"
6. Two (2) Randell Model DIADBR20 Adapter Bar, 20"

ITEM # 59 SNEEZE GUARD WITH HEAT AND LIGHT - BY OWNER

Quantity: One (1)
Manufacturer: English Manufacturing
Model: CUSTOM

1. One (1) Model CUSTOM Provide as per English Manufacturing custom shop drawings:
2. English Manufacturing shall confirm all sneeze guards meet NSF requirements prior to fabrication and installation of sneeze guards on site. All sneeze guards shall stay within minimum NSF requirements to avoid excessive customer reach to access food under sneeze guards.
3. All Owner Supplied equipment to be stored on site by Uconn. KEC will pick up equipment on campus, deliver to the site, uncrate, set in place level, provide all accessories to the owner or to appropriate trade for installation and remove/dispose of all packing/shipping material. General Contractor is to coordinate all work with the KEC and facilitate coopera-tion across all trades for a successful installation.
4. Provide as per detail F2-70 on sheet K4.6
5. Provide with black powder coat finish.
6. Coordinate installation with Item No. 55 - Comfort Counter

~~ITEM # 59 SNEEZE GUARD WITH HEAT AND LIGHT - BY OWNER~~

~~Quantity: One (1)~~
~~Manufacturer: English Manufacturing~~
~~Model: CUSTOM~~

~~1. Sneezeguard: Includes custom Rect - 1-1/2" x 1-1/2" S/S "T" Posts with end caps - Posts 18" high, 1/2" tempered glass Top panels 20" wide, and 5" Wide Front Glass, (1) 1/2" tempered glass RIGHT end panel, (1) 1/2" tempered glass LEFT end panel, LED lights installed in a housing with a remote. Requires location, wiring and installation by others in the field., warmer(s) are 120V, include decora-tive housing(s) and are supplied with remote infinite control(s) to be installed in the field by others, Unit shipped fully assembled.~~
~~2. All Owner Supplied equipment to be stored on site by Uconn. KEC will pick up equipment on campus, deliver to the site, uncrate, set in place level, provide all accessories to the owner or to appropriate trade for installation and remove/dispose of all packing/shipping material. General Contractor is to~~

~~coordinate all work with the KEC and facilitate cooperation across all trades for a successful installation.~~
~~3. Provide as per custom shop drawings.~~
~~4. Coordinate installation with Item No. 55 - Comfort Counter~~

ITEM # 60 DESSERT COUNTER

Quantity: One (1)
Manufacturer: MILLWORK
Model: CUSTOM

1. Provide as per Foodservice Millwork Drawings and Details and the following:
2. Verify and coordinate all finishes and hardware with the Architect.
3. Verify and coordinate air circulation requirements for all drop-in equipment.
4. Provide penetrations in base for indirect waste piping coordinated with floor sink locations.
5. Coordinate coving of finish floor material up to base in field with the General Contractor/Construction Manager.
6. KEC to provide protection between equipment and countertop from hot and cold temperature fluctuations, as per detail M1-1 on sheet K-502
7. Counter shall be constructed entirely of stainless steel and have 2" square tubular framing.
8. Provide with 1-1/4" SS-1 solid surface countertop and plate shelves with eased edges. Verify finish material with architectural specifications.
9. Provide all exposed surfaces with PL-1 laminate applied over 3/4" industrial grade medium density fiberboard. Verify finish materials with architectural specifications.
10. Coordinate WB-1 tile base (by G.C.) over 4" high 14 ga. stainless steel with tile backerboard in field with the General Contractor.
11. Two (2) Cal-Mil Model 1017-39 Provide with two (2) Cal-Mil Cutlery Cylinder, 5-1/2" H, 4-1/2" dia., round, BPA Free, perforated, stainless steel, silver
12. Foodservice Equipment Subcontractor shall verify and coordinate the fabrication with regard to delivery and access into building.

ITEM # 61 SPARE NUMBER

ITEM # 62 SPARE NUMBER

ITEM # 63 SPARE NUMBER

ITEM # 64 SPARE NUMBER

ITEM # 65 DROP-IN FROST TOP

Quantity: One (1)
Manufacturer: Randell (or equal by Atlas Metal or Delfield)
Model: 9843SCA

1. One (1) Model 9843SCA Drop-In Frost Top, refrigerated, 43" L, 26" W, stainless steel top with thermostatic control, corrosion resistant steel exterior, self-contained refrigeration system, 1/4 HP, cUL, UL, NSF, Made in USA
2. KEC shall coordinate the installation of easily accessible shut off valves on the indirect waste line from the equipment in the field with the General Contractor and/ or Plumbing Contractor. All shut off

valves shall be easily accessible to the operator and installed as close to the front of the drop-in equipment as possible to prevent the operator from having to climb under the equipment to open and close the shut off valve.
3. Coordinate installation with Item No. 60 - Dessert Counter
4. One (1) Randell 115v/60/1-ph, 5.0 amps, 8' cord, NEMA 5-15P, standard
5. One (1) Randell Model DISWTRCK Remote on/off switch, 8' cord, NEMA 5-15P

ITEM # 66 COLD FOOD WELLS

Quantity: One (1)
Manufacturer: Randell (or equal by Atlas Metal or Delfield)
Model: RCP-1

1. One (1) Model RCP-1 Drop-In Cold Food Unit, refrigerated, 17-1/2" L, 26" W, 1-pan size, insulated pan, stainless steel inner liner & top, corrosion resistant steel exterior, swivel base condensing unit, 1/4 HP, NSF 7, cUL, UL, Made in USA
2. KEC shall coordinate the installation of easily accessible shut off valves on the indirect waste line from the equipment in the field with the General Contractor and/ or Plumbing Contractor. All shut off valves shall be easily accessible to the operator and installed as close to the front of the drop-in equipment as possible to prevent the operator from having to climb under the equipment to open and close the shut off valve.
3. One (1) Randell 115v/60/1-ph, 5.0 amps, 8' cord, NEMA 5-15P, standard
4. One (1) Randell Model DISSLOUVERS 3 sided louvered enclosure on compressor housing
5. One (1) Randell Model DISWTRCK Remote on/off switch, 8' cord, NEMA 5-15P
6. One (1) Randell Model DIADBR12 Adapter Bar, 12"

ITEM # 67 SNEEZE GUARD WITH LIGHT - BY OWNER

Quantity: One (1)
Manufacturer: English Manufacturing
Model: CUSTOM

1. **One (1) Model CUSTOM Provide as per English Manufacturing custom shop drawings and the following:**
2. **English Manufacturing shall confirm all sneeze guards meet NSF requirements prior to fabrication and installation of sneeze guards on site. All sneeze guards shall stay within minimum NSF requirements to avoid excessive customer reach to access food under sneeze guards.**
3. **All Owner Supplied equipment to be stored on site by Uconn. KEC will pick up equipment on campus, deliver to the site, uncrate, set in place level, provide all accessories to the owner or to appropriate trade for installation and remove/dispose of all packing/shipping material. General Contractor is to coordinate all work with the KEC and facilitate coopera-tion across all trades for a successful installation.**
4. **Provide as per detail F2-70 on sheet K4.6**
5. **Provide with black powder coat finish.**
6. **Coordinate installation with Item No. 55 - Comfort Counter**

~~ITEM # 67 SNEEZE GUARD WITH LIGHT - BY OWNER~~

~~Quantity: One (1)~~
~~Manufacturer: English Manufacturing~~
~~Model: CUSTOM~~

1. ~~Sneezeguard: Includes custom Rect - 1-1/2" x 1-1/2" S/S "T" Posts with end caps - Posts 18" high, 1/2" tempered glass Top panels 20" wide, and 5" Wide Front Glass, (1) 1/2" tempered glass RIGHT end panel, (1) 1/2" tempered glass LEFT end panel, LED lights installed in a housing with a remote. Requires location, wiring and installation by others in the field., Unit shipped fully assembled.~~
2. ~~All Owner Supplied equipment to be stored on site by Uconn. KEC will pick up equipment on campus, deliver to the site, uncrate, set in place level, provide all accessories to the owner or to appropriate trade for installation and remove/dispose of all packing/shipping material. General Contractor is to coordinate all work with the KEC and facilitate cooperation across all trades for a successful installation.~~
3. ~~Provide as per custom shop drawings.~~
4. ~~Coordinate installation with Item No. 55 - Comfort Counter~~

ITEM # 68 ICE CREAM DIPPING CABINET - BY OWNER

Quantity: One (1)
Manufacturer: Master-Bilt Products
Model: DC-6D

1. One (1) Model DC-6D Ice Cream Dipping Cabinet, dip (8) 3 gallon, store (5) 3 gallon, cold-wall evaporator, painted textured galvanized steel exterior, galvanized steel interior, stainless steel top with anti-condensate heater, flip lid, temperature range 10° to -10°F, 1/4 hp, 115v/60/1-ph, 5.7 amps, 9' cord, NEMA 5-15P, cULus, NSF, Made in USA
2. All Owner Supplied equipment to be stored on site by Uconn. KEC will pick up equipment on campus, deliver to the site, uncrate, set in place level, provide all accessories to the owner or to appropriate trade for installation and remove/dispose of all packing/shipping material. General Contractor is to coordinate all work with the KEC and facilitate cooperation across all trades for a successful installation.
3. One (1) Black textured exterior finish
4. One (1) Model A043-11129 Lid Locking Kit, less locks, for DC-6D & DC-8D
5. One (1) Model 44-00471 Lids, double lid, for DC series

ITEM # 69 DIPPER WELL - BY OWNER

Quantity: One (1)
Manufacturer: Master-Bilt Products
Model: A060-20400

1. One (1) Model A060-20400 Dipper Well, with installation kit, for all DD, DC, FLR & GEL series models
2. All Owner Supplied equipment to be stored on site by Uconn. KEC will pick up equipment on campus, deliver to the site, uncrate, set in place level, provide all accessories to the owner or to appropriate trade for installation and remove/dispose of all packing/shipping material. General Contractor is to coordinate all work with the KEC and facilitate cooperation across all trades for a successful installation.

ITEM # 70 MOBILE HEATED CABINET - BY OWNER

Quantity: One (1)
Manufacturer: Cres Cor
Model: H-137-SUA-12D

1. One (1) Model H-137-SUA-12D Cabinet, Mobile Heated, insulated, top-mount heater assembly, recessed push/pull handles, magnetic latch, (12) sets chrome plated wire universal angle slides for 12"

x 20" thru 18" x 26" pans on 4-1/2" centers, adjustable 1-1/2" centers, reversible dutch doors, (4) heavy duty 5" swivel casters (2) braked, anti-microbial latches, stainless steel construction, NSF, cCSAus, ENERGY STAR®
2. All Owner Supplied equipment to be stored on site by Uconn. KEC will pick up equipment on campus, deliver to the site, uncrate, set in place level, provide all accessories to the owner or to appropriate trade for installation and remove/dispose of all packing/shipping material. General Contractor is to coordinate all work with the KEC and facilitate cooperation across all trades for a successful installation.
3. One (1) 120v/60/1-ph, 1500 watts, 12.0 amp, 10 ft power cord, NEMA 5-15P, standard
4. One (1) Right-hand door swing, standard
5. One (1) Model 1405-159 Perimeter Bumper, add 2" to OA dimensions, non-marking, gray
6. One (1) Model 1087-101 Rear Push Handle
7. One (1) Model 1430 Floor Lock, for use with 5" casters (Not available on Aqua Temp models, full size hot cabinets or banquet cabinets)

ITEM # 71 SPARE NUMBER

ITEM # 72 SPARE NUMBER

ITEM # 73 2-DOOR ROLL-IN REFRIGERATOR - BY OWNER

Quantity: One (1)
Manufacturer: True Manufacturing Co., Inc.
Model: STR2RRI-2S

1. One (1) Model STR2RRI-2S SPEC SERIES® Roll-in Refrigerator, stainless steel front & sides, (2) stainless steel doors with locks, cam-lift hinges, digital temperature control, stainless steel interior, incandescent interior lighting, stainless steel ramps, 1/2 HP, 115v/60/1, 11.8 amps, NEMA 5-15P, [accommodates 27"Wx29"Dx66"H carts, NOT included], cULus, UL EPH Classified, MADE IN USA
2. All Owner Supplied equipment to be stored on site by Uconn. KEC will pick up equipment on campus, deliver to the site, uncrate, set in place level, provide all accessories to the owner or to appropriate trade for installation and remove/dispose of all packing/shipping material. General Contractor is to coordinate all work with the KEC and facilitate cooperation across all trades for a successful installation.
3. One (1) Left door hinged left, right door hinged right standard

ITEM # 74E REACH-IN REFRIGERATOR - EXISTING <Existing>

Quantity: One (1)
Manufacturer: True Manufacturing Co., Inc.
Model: STA1R-1S

1. Existing - Verify and coordinate all dimensions, details and utility requirements in the field with the GC/CM.

ITEM # 75E 2-DOOR REACH IN REFRIGERATOR - EXISTING <Existing>

Quantity: One (1)
Manufacturer: True Manufacturing Co., Inc.
Model: STA2R-2S

1. Existing - Verify and coordinate all dimensions, details and utility requirements in the field with the GC/CM.

ITEM # 76 PREP TABLE W/ SINKS - BY OWNER

Quantity: One (1)
Manufacturer: Fabricator
Model: CUSTOM

1. Provide as per Foodservice Fabrication Drawings and Details and the following:
2. All Owner Supplied equipment to be stored on site by Uconn. KEC will pick up equipment on campus, deliver to the site, uncrate, set in place level, provide all accessories to the owner or to appropriate trade for installation and remove/dispose of all packing/shipping material. General Contractor is to coordinate all work with the KEC and facilitate cooperation across all trades for a successful installation.
3. Provide unit with two (2) 21" x 21" x 9" deep sinks.
4. One (1) T&S Brass Model B-0220-LN Deck Mixing Faucet, 8" centers on deck faucet with 1/2" IPS eccentric flanged female inlets, lever handles
5. One (1) T&S Brass Model 062X Swing Nozzle, 12"
6. One (1) T&S Brass Model B-0199-02F-03 Low Flow Aerator
7. Two (2) T&S Brass Model B-3950 Waste Valve, twist handle, 3-1/2" sink opening, 2" drain outlet with 1-1/2" adapter (replaces B-3912, B-3916)
8. Foodservice Equipment Subcontractor shall verify and coordinate the fabrication with regard to delivery and access into building.

ITEM # 77 HANDSINK - BY OWNER

Quantity: One (1)
Manufacturer: Advance Tabco
Model: 7-PS-71

1. One (1) Model 7-PS-71 Hand Sink, wall mounted, 14" wide x 10" front-to-back x 5" deep bowl, 20 gauge 304 stainless steel, single splash faucet hole (no faucet), basket drain, wall bracket, NSF, cCSAus
2. All Owner Supplied equipment to be stored on site by Uconn. KEC will pick up equipment on campus, deliver to the site, uncrate, set in place level, provide all accessories to the owner or to appropriate trade for installation and remove/dispose of all packing/shipping material. General Contractor is to coordinate all work with the KEC and facilitate cooperation across all trades for a successful installation.
3. Provide electronic faucet with a 20-30 second run time.
4. Provide mixed water to be 110 degrees.
5. Coordinate wall blocking by the General Contractor
6. Provide unit mounted with rim at 34" A.F.F.
7. KEC shall install T&S 0.5 GPM aerator on handsink faucet and turn 1.5 GPM aerator over to Owner.
8. One (1) T&S Brass Model EC-3101-VF05 ChekPoint™ Electronic Faucet, wall mount, gooseneck, AC/DC control module, .5 GPM vandal resistant aerator spray device, 100-240 VAC adapter
9. One (1) Model 7-PS-10 P-trap, heavy duty, 1-1/2", 17 gauge
10. One (1) Model 7-PS-17 Welded Side Splash, 7-3/4" tall, both sides, for hand sinks with 14" wide x 10" front-to-back bowl, splash mounted faucets

ITEM # 77A TOUCHLESS SOAP DISPENSER - BY OWNER

Quantity: One (1)
Manufacturer: GOJO Industries
Model: 2730-12

1. One (1) Model 2730-12 By Owner - Verify all details, dimensions and utility requirements in the field with the GC/CM.
2. All Owner Supplied equipment to be stored on site by Uconn. KEC will pick up equipment on campus, deliver to the site, uncrate, set in place level, provide all accessories to the owner or to appropriate trade for installation and remove/dispose of all packing/shipping material. General Contractor is to coordinate all work with the KEC and facilitate cooperation across all trades for a successful installation.
3. Coordinate wall blocking by General Contractor.

ITEM # 77B PAPER TOWEL DISPENSER - BY OWNER

Quantity: One (1)
Manufacturer: San Jamar
Model: T1490TBK

1. One (1) Model T1490TBK By Owner - Verify all details, dimensions and utility requirements in the field with the GC/CM.
2. All Owner Supplied equipment to be stored on site by Uconn. KEC will pick up equipment on campus, deliver to the site, uncrate, set in place level, provide all accessories to the owner or to appropriate trade for installation and remove/dispose of all packing/shipping material. General Contractor is to coordinate all work with the KEC and facilitate cooperation across all trades for a successful installation.
3. Coordinate wall blocking by General Contractor.

ITEM # 78 SPARE NUMBER

ITEM # 79 MOP SINK <By Plumbing Contractor>

Quantity: One (1)
Manufacturer: BY PLUMBING CONTRACTOR
Model: BY PC

1. By Plumbing Contractor - Verify and coordinate all details dimensions and utiltiy requirements with the GC/CM.

ITEM # 80 SPARE NUMBER

ITEM # 81 SPARE NUMBER

ITEM # 82 SPARE NUMBER

ITEM # 83 SPARE NUMBER

ITEM # 84 FIRE SUPPRESSION SYSTEM

Quantity: One (1)
Manufacturer: Ansul Fire Protection (or equal by Kidde or Badger)
Model: R-102

1. One (1) Model R-102 Provide as per the manufacturer's standard and the following:
2. Unit to provide fire protection for Item No. 48 - Exhaust Hood and cooking equipment below.
3. System to be wet chemical-type fire protection system used to protect appliance surfaces, hood exhaust collars and plenum, in accordance with NFPA 17A and 96, UL 300, and in accordance with the local authority having jurisdiction.
4. Ventilator manufacturer to factory pre-pipe to the extent possible. Chemical line piping to run above ventilator roof lines.
5. All ventilator penetrations to use UL listed penetration fittings, and all exposed piping to be chrome-plated or chrome-sleeved.
6. Food Service Subcontractor to furnish mechanical gas solenoid type shut-off valves, and provide them to the Plumbing Subcontractor for installation.
7. All final electrical connections to valves and reset relays by Electrical Subcontractor.
8. System to include a remote, manual-pull, activation station and the certified site Ansul installer is to perform a discharge test.
9. Provide all accessories for a completely installed and operational fire protection system including but not limited to piping, nozzles, valves, remote pull stations and tanks.
10. Provide unit with four (4) dry contacts for connection to building systems by others.
11. Electrical Subcontractor shall provide interconnection to building alarm system.
12. Electrical Subcontractor to provide all interconnect wiring required in accordance with NFPA 17A.
13. Coordinate wall blocking by General Contractor.

ITEM # 85 MOBILE POT SHELF - BY OWNER

Quantity: One (1)
Manufacturer: Metro
Model: MAX Q

1. One (1) Model MAX Q Provide manufacturer's standard and the following:
2. All Owner Supplied equipment to be stored on site by Uconn. KEC will pick up equipment on campus, deliver to the site, uncrate, set in place level, provide all accessories to the owner or to appropriate trade for installation and remove/dispose of all packing/shipping material. General Contractor is to coordinate all work with the KEC and facilitate cooperation across all trades for a successful installation.
3. Four (4) Model MQ2130G MetroMax Q™ Shelf, 30"W x 21"D, open grid polymer with Microban® antimicrobial product protection, epoxy coat steel frame, (4) wedge connectors, NSF
4. Four (4) Model MX74UP Polymer trilobal post (compatible with MetroMax i, MetroMax 4, MetroMax Q), 73-3/16"H, for use with stem casters, adjusts at 1" increments, corrosion proof all polymer construction with built in Microban® antimicrobial product protection
5. Four (4) Model 5MRX Stem Caster, rigid, 5" diameter, 1-1/4" wide face, flat resilient wheel tread, 200 lb. capacity, NSF (donut bumpers included) (for use with all MetroMax posts & shelves)

ITEM # 86 SPARE NUMBER

ITEM # 87 UNDERCOUNTER REFRIGERATOR - BY OWNER

Quantity: One (1)
Manufacturer: True Manufacturing Co., Inc.
Model: TUC-36-LP-HC~SPEC1

1. One (1) Model TUC-36-LP-HC~SPEC1 SPEC SERIES® Low Profile Undercounter Refrigerator, 33-38° F; SPEC Package 1 includes: 16-ga. stainless steel top, stainless steel sides & back, stainless steel interior, (2) heavy duty stainless steel doors, steel handles, door lock standard, (4) shelves, electronic temperature control with digital temperature display; 1-1/2" diameter dual swivel castors, 31-7/8" counter height, front breathing, R290 Hydrocarbon refrigerant, 1/6 HP, 115v/60/1, 6.1 amps, NEMA 5-15P, cULus, UL EPH Classified, CE, MADE IN USA
2. All Owner Supplied equipment to be stored on site by Uconn. KEC will pick up equipment on campus, deliver to the site, uncrate, set in place level, provide all accessories to the owner or to appropriate trade for installation and remove/dispose of all packing/shipping material. General Contractor is to coordinate all work with the KEC and facilitate cooperation across all trades for a successful installation.
3. One (1) Self-contained refrigeration standard
4. One (1) 1-1/2" diameter dual wheel castors, standard

ITEM # 88 FOOD PROCESSOR - BY OWNER

Quantity: One (1)
Manufacturer: Robot Coupe
Model: R602VV

1. One (1) Model R602VV Combination Food Processor, 7 liter stainless steel bowl with handle, continuous feed kit with kidney shaped & cylindrical shaped hoppers, includes: (1) "S" blade (27124), (1) 3mm grating disc (28058), (1) 3mm slicing disc (28064), variable speed, 300 - 3500 RPM, 120v/60/1-ph, 20.0 amps, 3 HP, NEMA 5-20P, cETLus, ETL-Sanitation
2. All Owner Supplied equipment to be stored on site by Uconn. KEC will pick up equipment on campus, deliver to the site, uncrate, set in place level, provide all accessories to the owner or to appropriate trade for installation and remove/dispose of all packing/shipping material. General Contractor is to coordinate all work with the KEC and facilitate cooperation across all trades for a successful installation.

ITEM # 89 HANDSINK - BY OWNER

Quantity: One (1)
Manufacturer: Advance Tabco
Model: 7-PS-71

1. One (1) Model 7-PS-71 Hand Sink, wall mounted, 14" wide x 10" front-to-back x 5" deep bowl, 20 gauge 304 stainless steel, single splash faucet hole (no faucet), basket drain, wall bracket, NSF, cCSAus
2. All Owner Supplied equipment to be stored on site by Uconn. KEC will pick up equipment on campus, deliver to the site, uncrate, set in place level, provide all accessories to the owner or to appropriate trade for installation and remove/dispose of all packing/shipping material. General Contractor is to coordinate all work with the KEC and facilitate cooperation across all trades for a successful installation.
3. Provide electronic faucet with a 20-30 second run time.
4. Provide mixed water to be 110 degrees.
5. Coordinate wall blocking by the General Contractor
6. Provide unit mounted with rim at 34" A.F.F.

7. KEC shall install T&S 0.5 GPM aerator on handsink faucet and turn 1.5 GPM aerator over to Owner.
8. One (1) T&S Brass Model EC-3101-VF05 ChekPoint™ Electronic Faucet, wall mount, gooseneck, AC/DC control module, .5 GPM vandal resistant aerator spray device, 100-240 VAC adapter
9. One (1) Model 7-PS-10 P-trap, heavy duty, 1-1/2", 17 gauge
10. One (1) Model 7-PS-17 Welded Side Splash, 7-3/4" tall, both sides, for hand sinks with 14" wide x 10" front-to-back bowl, splash mounted faucets

ITEM # 89A TOUCHLESS SOAP DISPENSER - BY OWNER

Quantity: One (1)
Manufacturer: GOJO Industries
Model: 2730-12

1. One (1) Model 2730-12 By Owner - Verify all details, dimensions and utility requirements in the field with the GC/CM.
2. All Owner Supplied equipment to be stored on site by Uconn. KEC will pick up equipment on campus, deliver to the site, uncrate, set in place level, provide all accessories to the owner or to appropriate trade for installation and remove/dispose of all packing/shipping material. General Contractor is to coordinate all work with the KEC and facilitate cooperation across all trades for a successful installation.
3. Coordinate wall blocking by General Contractor.

ITEM # 89B PAPER TOWEL DISPENSER - BY OWNER

Quantity: One (1)
Manufacturer: San Jamar
Model: T1490TBK

1. By Owner - Verify all details, dimensions and utility requirements in the field with the GC/CM.
2. All Owner Supplied equipment to be stored on site by Uconn. KEC will pick up equipment on campus, deliver to the site, uncrate, set in place level, provide all accessories to the owner or to appropriate trade for installation and remove/dispose of all packing/shipping material. General Contractor is to coordinate all work with the KEC and facilitate cooperation across all trades for a successful installation.
3. Coordinate wall blocking by General Contractor.

ITEM # 90 MOBILE DRY STORAGE SHELVING - BY OWNER

Quantity: Two (2)
Manufacturer: Metro
Model: SUPER ADJUSTABLE ERECTA

1. Two (2) Model SUPER ADJUSTABLE ERECTA Provide manufacturer's standard and the following:
2. All Owner Supplied equipment to be stored on site by Uconn. KEC will pick up equipment on campus, deliver to the site, uncrate, set in place level, provide all accessories to the owner or to appropriate trade for installation and remove/dispose of all packing/shipping material. General Contractor is to coordinate all work with the KEC and facilitate cooperation across all trades for a successful installation.
3. Eight (8) Model 2136BR Super Erecta® Shelf, wire, 36"W x 21"D, Brite (zinc) finish, plastic split sleeves are included in each carton, NSF
4. Eight (8) Model 74UP Super Erecta® Post, 73-7/8"H, for use with stem casters, chrome plated finish
5. Eight (8) Model 5MB Super Erecta® Stem Caster, brake (foot operated), 5" diameter, 1-1/4" face, flat resilient wheel tread, with donut bumpers, 200 lb. capacity, brakes are foot operated

ITEM # 91 POT SINK - BY OWNER

Quantity: One (1)
Manufacturer: Eagle Group
Model: 312-12-3-12

1. One (1) Model 312-12-3-12 312 Series Convenience Store Sink, three compartment, 66"W x 27"D, 304 stainless steel construction, 12" wide x 20" front-to-back x 12" deep bowls, 12" drainboards on left & right, 9-1/2"H splash with 1" upturn & tile edge, rolled edges on front & sides, 8" OC splash mount faucet holes, includes (3) basket drains, galvanized legs & side crossbracing, adjustable bullet feet, NSF
2. All Owner Supplied equipment to be stored on site by Uconn. KEC will pick up equipment on campus, deliver to the site, uncrate, set in place level, provide all accessories to the owner or to appropriate trade for installation and remove/dispose of all packing/shipping material. General Contractor is to coordinate all work with the KEC and facilitate cooperation across all trades for a successful installation.
3. One (1) T&S Brass Model B-0231-CR-K-F10 Pantry Faucet, double, 8" wall mount, 12" swivel nozzle, ceramic cartridges with check valves, lever handles, (2) 24" flexible hoses, installation kit, 1.0 GPM aerator, low lead, ADA Compliant, 1/2" NPT, (B-0230-k)
4. One (1) T&S Brass Model B-0199-02F-03 KEC shall install T&S 0.25 GPM aerator on pot sink and turn 1.0 GPM aerator over to owner.
5. P.C. to provide a 3/8 female threaded fitting with a shut off value on the hot water line at the 3-bay sink to dispense pot & pan soap.
6. P.C. to provide a 3/8 female threaded fitting with a shut off value on the cold water line at the 3-bay sink to dispense sanitizer.
7. Three (3) Model 300720 Lever Handle Drain, 1-1/2" or 2" IPS connection
8. One (1) Model -SL stainless steel legs with front-to-back crossbracing (stainless steel feet not included)
9. Four (4) Model 300692 Bullet Feet, stainless steel, each

ITEM # 92 WORK TABLE - BY OWNER

Quantity: One (1)
Manufacturer: Advance Tabco
Model: KMS-364

1. One (1) Model KMS-364 Work Table, 48"W x 36"D, 16 gauge 304 stainless steel top with 5"H backsplash, 18 gauge stainless steel adjustable undershelf, stainless steel legs & adjustable bullet feet, NSF
2. All Owner Supplied equipment to be stored on site by Uconn. KEC will pick up equipment on campus, deliver to the site, uncrate, set in place level, provide all accessories to the owner or to appropriate trade for installation and remove/dispose of all packing/shipping material. General Contractor is to coordinate all work with the KEC and facilitate cooperation across all trades for a successful installation.

ITEM # 93 SPARE NUMBER

ITEM # 94 DEMAND CONTROL SYSTEM

Quantity: One (1)
Manufacturer: Intellinox (or equal by Mellink or Halton)
Model: ECOAZUR

1. Provide per manufacturer's standard and the following:
2. KITCHEN ENERGY SOLUTIONS shall furnish and install the ecoAZUR system including the following: one – Processor, one - Keypad, all necessary Temperature Sensors, Optic Sensors, and Modulating Dampers (if applicable). Note: A kitchen may have multiple processors, keypads, etc., based on design.
3. Interconnect with items:
4. Kitchen Energy Solutions to mount a temperature sensor in each Exhaust Hood.
5. Kitchen Energy Solutions to mount the ecoAZUR Processor above the hood in the ceiling plenum, or in another specified location per customer's request.
6. Kitchen Energy Solutions to install keypad(s) on walls or hoods at locations designated on print or coordinate with customer.
7. Kitchen Energy Solutions to mount an optic sensor set inside the hood.
8. Kitchen Energy Solutions to mount a NE Network Hub above the hood.
9. Kitchen Energy Solutions shall terminate all wires in the ecoAZUR Processor.
10. Kitchen Energy Solutions to connect low voltage plenum rated plug-n-play cables from ecoAZUR Processor to keypad and sensors for each hood.
11. Kitchen Energy Solutions to start-up the system by pressing the Auto button on keypad to verify the fans go to minimum speed and to verify all necessary internal programming of the system.
12. Kitchen Energy Solutions to program the system based on the application.(i.e. Temperature span, minimum speed, number of sensors).
13. Kitchen Energy Solutions to perform owner training and furnish final OEM manuals.
14. This pre-engineered system shall be installed by Kitchen Energy Solutions only. The system shall be manufactured by Intellinox based in Quebec, Canada and furnished and installed by Kitchen Energy Solutions out of Auburn, NH. 603-262-9292
15. KITCHEN ENERGY SOLUTIONS to wire a 115 Volt circuit to the ecoAZUR Processor.
16. KITCHEN ENERGY SOLUTIONS to wire from the fire suppression micro switch normally closed dry contacts to the Intellinox Processor. (This will ensure the exhaust fan(s) go to 100% speed and the MUA goes to 0% speed in the event of a fire suppression emergency).
17. KITCHEN ENERGY SOLUTIONS to wire a speed reference output signal and run signal from the ecoAZUR Processor to the VFD's. The ecoAZUR Processor will provide a 0 to 10VDC output signal as a speed reference signal to indicate fan speed, which is controlled via the VFD.
18. CONTROLS CONTRACTOR may wire a parallel signal to offer the following reference points: Speed reference, fault, run command, enable / disable signal to turn on / off the ecoAZUR Processor. These signals are to be wired by the controls contractor as required by the building automation system and / or owner's request. All terminations inside the ecoAZUR Processor shall be done only by Kitchen Energy Solutions. Please note that this step is optional and is to be determined by designer, owner, etc.
19. All other safety related controls or electrical wiring related to the kitchen hood or fire suppression system or building alarm is not by Kitchen Energy Solutions.
20. KITCHEN ENERGY SOLUTIONS to furnish all labor and materials to install the VFD for each respective kitchen hood fan.
    These VFDs are protected with NEMA 1 housing and must be installed indoors where ambient temperatures do not exceed 40 deg. C / 104 deg. F degrees. (Note: If there is a heated MUA unit, a separate circuit must feed the controls. Do not use the motor circuit).
21. KITCHEN ENERGY SOLUTIONS to wire the 3 phase power wiring from the electrical panel to each VFD(s) line side of the VFD. Location of VFD determined by engineer / owner.

ITEM # 95 TRASH BIN - BY OWNER

Quantity: Five (5)
Manufacturer: Rubbermaid Commercial Products
Model: FG295700GRAY

1. Five (5) Model FG295700GRAY Waste Basket, 41-1/4 quart, 15-1/4"W x 11"D x 19-7/8"H, medium, soft, rolled rims, all plastic, won't chip, rust or dent, gray, Made in USA
2. All Owner Supplied equipment to be stored on site by Uconn. KEC will pick up equipment on campus, deliver to the site, uncrate, set in place level, provide all accessories to the owner or to appropriate trade for installation and remove/dispose of all packing/shipping material. General Contractor is to coordinate all work with the KEC and facilitate cooperation across all trades for a successful installation.

ITEM # 96 RECESSED SILVERWARE DISPENSER - BY OWNER

Quantity: Sixteen (16)
Manufacturer: Cal-Mil
Model: 1017-39

1. Sixteen (16) Model 1017-39 Cutlery Cylinder, 5-1/2" H, 4-1/2" dia., round, perforated, stainless steel, silver, BPA Free
2. All Owner Supplied equipment to be stored on site by Uconn. KEC will pick up equipment on campus, deliver to the site, uncrate, set in place level, provide all accessories to the owner or to appropriate trade for installation and remove/dispose of all packing/shipping material. General Contractor is to coordinate all work with the KEC and facilitate cooperation across all trades for a successful installation.

ITEM # 97 PAPER NAPKIN DISPENSER - BY OWNER

Quantity: Two (2)
Manufacturer: San Jamar
Model: H2005CLSS

1. Two (2) Model H2005CLSS Countertop Napkin Dispenser, in-counter, 7"L x 5-1/2"W x 19-5/8"H, holds 750+ fullfold napkins, 22-gauge steel body, 18-gauge steel and ABS-plastic clear faceplate
2. All Owner Supplied equipment to be stored on site by Uconn. KEC will pick up equipment on campus, deliver to the site, uncrate, set in place level, provide all accessories to the owner or to appropriate trade for installation and remove/dispose of all packing/shipping material. General Contractor is to coordinate all work with the KEC and facilitate cooperation across all trades for a successful installation.

ITEM # 98 ICE CUBER - EXISTING TO BE RELOCATED

Quantity: One (1)
Manufacturer: Manitowoc
Model: ID-0906A

1. One (1) Model ID-0906A Indigo™ Series Ice Maker, cube-style, air-cooled, self-contained condenser, 30"W x 24-1/2"D x 26-1/2"H, production capacity up to 874 lb/24 hours (664 lb AHRI certified at 90°/70°), DuraTech™ exterior, dice size cubes, NSF, cULus, ENERGY STAR®
2. One (1) (-261) 208-230v/60/1-ph, 12.2 amps, standard

3. One (1) Model B-970 Ice Bin, 48"W x 34"D x 50"H, with top-hinged front-opening door, AHRI certified 710 lb ice storage capacity, for top-mounted ice maker, Duratech exterior, NSF (CONTACT DISTRIBUTOR FOR AVAILABILITY)
4. One (1) Model K-00470 Bin Adapter, for 30" Indigo, Indigo NXT, RFF, RNF, ice machine on a 48" B or D-970 bin

END OF SECTION 114000

SECTION 211313 - WET-PIPE SPRINKLER SYSTEMS

PART 1 - GENERAL

1.1 RELATED DOCUMENTS

A. Drawings and general provisions of the Contract, including General and Supplementary Conditions and Division 01 Specification Sections, apply to this Section.

1.2 SUMMARY

A. Section Includes:
1. Pipes, fittings, and specialties.
2. Specialty valves.
3. Sprinklers.
4. Alarm devices.
5. Pressure gages.

B. Related Requirements:
1. Section 210523 "General-Duty Valves for Water-Based Fire-Suppression Piping" for ball, butterfly, check, gate, post-indicator, and trim and drain valves.

1.3 DEFINITIONS

A. Standard-Pressure Sprinkler Piping: Wet-pipe sprinkler system piping designed to operate at working pressure of 175-psig maximum.

1.4 ACTION SUBMITTALS

A. Product Data: For each type of product.
1. Include rated capacities, operating characteristics, electrical characteristics, and furnished specialties and accessories.
2. Product data shall be submitted to the authority having jurisdiction and the Owner's insurance underwriter for review and approval, within 30 days of contract award.

B. Shop Drawings: For wet-pipe sprinkler systems.
1. Include plans, elevations, sections, and attachment details.
2. Include diagrams for power, signal, and control wiring.

C. Delegated-Design Submittal: For wet-pipe sprinkler systems indicated to comply with performance requirements and design criteria, including analysis data signed and sealed by the qualified professional engineer responsible for their preparation. Qualified engineer shall be of the state in which the project is located. **Sprinkler design shall meet the requirements of FM Global. All hydraulic calculations shall be designed per FM Global Data Sheet 3-26, "Fire Protection Water Demand for Nonstorage Sprinklered Property." All sprinklers shall be installed per Data Sheet 2.0, Installation Guidelines for Automatic Sprinklers. Hydraulic Calculations shall be submitted to Fire Marshal and FM Global for review prior to installation. FM Global Form 85A, "Contractors Material and Test Certificate for Aboveground Piping" shall be submitted by the contractor to the Owner**

1.5 INFORMATIONAL SUBMITTALS

A. Coordination Drawings: Sprinkler systems, drawn to scale, on which the following items are shown and coordinated with each other, using input from installers of the items involved:
   1. Domestic water piping.
   2. Compressed air piping.
   3. HVAC hydronic piping.
   4. Items penetrating finished ceiling include the following:
      a. Lighting fixtures.
      b. Air outlets and inlets.
   5. HVAC ductwork.
   6. Structural steel.

B. Qualification Data: For qualified Installer and professional engineer.

C. Design Data:
   1. Approved Sprinkler Piping Drawings: Working plans, prepared according to NFPA 13, including hydraulic calculations shall be submitted to the authority having jurisdiction and the Owner's insurance underwriter for review and approval, within 30 days of contract award.

D. Welding certificates.

E. Field Test Reports:
   1. Indicate and interpret test results for compliance with performance requirements and as described in NFPA 13. **Include "Contractor's Material and Test Certificate for Aboveground Piping."**
   2. Fire-hydrant flow test report.

F. Field quality-control reports.

1.6 CLOSEOUT SUBMITTALS

A. Operation and Maintenance Data: For wet-pipe sprinkler systems and specialties to include in emergency, operation, and maintenance manuals.

1.7 MAINTENANCE MATERIAL SUBMITTALS

A. Furnish extra materials that match products installed and that are packaged with protective covering for storage and identified with labels describing contents.
   1. Sprinkler Cabinets: Finished, wall-mounted, steel cabinet with hinged cover, and with space for minimum of six spare sprinklers plus sprinkler wrench. Include number of sprinklers required by NFPA 13 and sprinkler wrench. Include separate cabinet with sprinklers and wrench for each type of sprinkler used on Project.

1.8 QUALITY ASSURANCE

A. Installer Qualifications:
   1. Installer's responsibilities include designing, fabricating, and installing sprinkler systems and providing professional engineering services needed to assume engineering responsibility. Base calculations on results of fire-hydrant flow test.
      a. Engineering Responsibility: Preparation of working plans, calculations, and field test reports by a qualified professional engineer.

B. Welding Qualifications: Qualify procedures and operators according to 2010 ASME Boiler and Pressure Vessel Code.

1.9 FIELD CONDITIONS

A. Interruption of Existing Sprinkler Service: Do not interrupt sprinkler service to facilities occupied by Owner or others unless permitted under the following conditions and then only after arranging to provide temporary sprinkler service according to requirements indicated:
   1. Notify Architect, Construction Manager and Owner no fewer than two days in advance of proposed interruption of sprinkler service.
   2. Do not proceed with interruption of sprinkler service without Architect's, Construction Manager's and Owner's written permission.

PART 2 - PRODUCTS

2.1 PERFORMANCE REQUIREMENTS

A. Sprinkler system equipment, specialties, accessories, installation, and testing shall comply with the following:
   1. NFPA 13.

B. Standard-Pressure Piping System Component: Listed for 175-psig minimum working pressure.

C. Delegated Design: Engage a qualified professional engineer, as defined in Section 014000 "Quality Requirements," to design wet-pipe sprinkler systems.
   1. Sprinkler system design shall be approved by authorities having jurisdiction.
      a. Margin of Safety for Available Water Flow and Pressure: 10 percent, including losses through water-service piping, valves, and backflow preventers.
      b. Sprinkler Occupancy Hazard Classifications:
         1) The following classifications are based on minimum NFPA 13 criteria and may be subject to change by the authority having jurisdiction and/or the Owner's insurance underwriter, which may have more stringent classification requirements. Prior to submitting his Bid, the Fire Protection Contractor shall contact the authority having jurisdiction and the Owner's insurance underwriter, to confirm that the classifications listed below are still applicable or if more stringent requirements are to be used for the Project.
            a) Building Service Areas: Ordinary Hazard, Group 1.
            b) Electrical Equipment Rooms: Ordinary Hazard, Group 1.
            c) General Storage Areas: Ordinary Hazard, Group 1.
            d) Mechanical Equipment Rooms: Ordinary Hazard, Group 1.
            e) Office and Public Areas: Light Hazard.
            f) Restaurant Service Areas: Ordinary Hazard, Group 1.
   2. Minimum Density for Automatic-Sprinkler Piping Design:
      a. The following classifications are based on minimum NFPA 13 criteria and may be subject to change by the authority having jurisdiction and/or the Owner's insurance underwriter, which may have more stringent classification requirements. Prior to submitting his Bid, the Fire Protection Contractor shall contact the authority having jurisdiction and the Owner's insurance underwriter, to confirm that the classifications listed below are still applicable or if more stringent requirements are to be used for the Project.
         1) Light-Hazard Occupancy: 0.10 gpm over 1500-sq. ft. area.
         2) Ordinary-Hazard, Group 1 Occupancy: 0.15 gpm over 1500-sq. ft. area.
         3) Ordinary-Hazard, Group 2 Occupancy: 0.20 gpm over 1500-sq. ft. area.
         4) Special Occupancy Hazard: As determined by authorities having jurisdiction.

3. Maximum Protection Area per Sprinkler:
    a. The following classifications are based on minimum NFPA 13 criteria and may be subject to change by the authority having jurisdiction and/or the Owner's insurance underwriter, which may have more stringent protection area requirements. Prior to submitting his Bid, the Fire Protection Contractor shall contact the authority having jurisdiction and the Owner's insurance underwriter, to confirm that the protection areas listed below are still applicable or if more stringent requirements are to be used for the Project.
        1) Office Spaces: 225 sq. ft.
        2) Storage Areas: 130 sq. ft.
        3) Mechanical Equipment Rooms: 130 sq. ft.
        4) Electrical Equipment Rooms: 130 sq. ft.
        5) Other Areas: According to NFPA 13 recommendations unless otherwise indicated.
    b. Total combined Hose-Stream Demand Requirement: According to NFPA 13 unless otherwise indicated:
        1) Light-Hazard Occupancies: 100 gpm for 30 minutes.
        2) Ordinary-Hazard Occupancies: 250 gpm for 60 to 90 minutes.

D. Seismic Performance: Sprinkler piping shall withstand the effects of earthquake motions determined according to NFPA 13 and ASCE/SEI 7.

2.2 STEEL PIPE AND FITTINGS

A. Standard-Weight, Black-Steel Pipe: ASTM A 53/A 53M, Type E, Grade B. Pipe ends may be factory or field formed to match joining method.

B. Black-Steel Pipe Nipples: ASTM A 733, made of ASTM A 53/A 53M, standard-weight, seamless steel pipe with threaded ends.

C. Malleable- or Ductile-Iron Unions: UL 860.

D. Cast-Iron Flanges: ASME 16.1, Class 125.

E. Steel Flanges and Flanged Fittings: ASME B16.5, Class 150.
1. Pipe-Flange Gasket Materials: AWWA C110, rubber, flat face, 1/8 inch thick, ASME B16.21, nonmetallic and asbestos free, or EPDM rubber gasket.
    a. Class 125 and Class 250, Cast-Iron, Flat-Face Flanges: Full-face gaskets.
    b. Class 150 and Class 300, Ductile-Iron or -Steel, Raised-Face Flanges: Ring-type gaskets.
2. Metal, Pipe-Flange Bolts and Nuts: Carbon steel unless otherwise indicated.

F. Steel Welding Fittings: ASTM A 234/A 234M and ASME B16.9.
1. Welding Filler Metals: Comply with AWS D10.12M/D10.12 for welding materials appropriate for wall thickness and chemical analysis of steel pipe being welded.

G. Grooved-Joint, Steel-Pipe Appurtenances:
1. Basis-of-Design Product: Subject to compliance with requirements, provide product indicated on Drawings or comparable product by one of the following:
    a. Anvil International.
    b. Corcoran Piping System Co.
    c. National Fittings, Inc.
    d. Shurjoint Piping Products USA Inc.
    e. Smith-Cooper International.

f. Tyco Fire Products LP.
g. Victaulic Company.

2. Pressure Rating: 175-psig minimum.
3. Uncoated Grooved-End Fittings for Steel Piping: ASTM A 47/A 47M, malleable-iron casting or ASTM A 536, ductile-iron casting, with dimensions matching steel pipe.
4. Grooved-End-Pipe Couplings for Steel Piping: AWWA C606 and UL 213 rigid pattern, unless otherwise indicated, for steel-pipe dimensions. Include ferrous housing sections, EPDM-rubber gasket, and bolts and nuts.

2.3 SPECIALTY VALVES

A. Listed in UL's "Fire Protection Equipment Directory" or FM Global's "Approval Guide."

B. Pressure Rating:
1. Standard-Pressure Piping Specialty Valves: 175-psig minimum.

C. Body Material: Cast or ductile iron.

D. Size: Same as connected piping.

E. End Connections: Flanged or grooved.

2.4 SPRINKLER PIPING SPECIALTIES

A. Flow Detection and Test Assemblies:
1. Basis-of-Design Product: Subject to compliance with requirements, provide product indicated on Drawings or comparable product by one of the following:
a. AGF Manufacturing, Inc.
b. Reliable Automatic Sprinkler Co., Inc. (The).
c. Tyco Fire Products LP.
d. Victaulic Company.
2. Standard: UL's "Fire Protection Equipment Directory" or FM Global's "Approval Guide."
3. Pressure Rating: 175-psig minimum.
4. Body Material: Cast- or ductile-iron housing with orifice, sight glass, and integral test valve.
5. Size: Same as connected piping.
6. Inlet and Outlet: Threaded or grooved.

2.5 SPRINKLERS

A. Basis-of-Design Product: Subject to compliance with requirements, provide product indicated on Drawings or comparable product by one of the following:
1. Globe Fire Sprinkler Corporation.
2. Reliable Automatic Sprinkler Co., Inc. (The).
3. Tyco Fire Products LP.
4. Victaulic Company.
5. Viking Corporation.

B. Listed in UL's "Fire Protection Equipment Directory" or FM Global's "Approval Guide."

C. Pressure Rating for Automatic Sprinklers: 175-psig minimum.

D. Automatic Sprinklers with Heat-Responsive Element:
1. Early-Suppression, Fast-Response Applications: UL 1767.

2. Nonresidential Applications: UL 199.
3. Characteristics: Nominal 1/2-inch orifice with Discharge Coefficient K of 5.6, and for "Ordinary" temperature classification rating unless otherwise indicated or required by application.

E. Sprinkler Finishes: Chrome plated, bronze and painted.

F. Sprinkler Escutcheons: Escutcheons for concealed, flush, and recessed-type sprinklers are specified with sprinklers.

G. Sprinkler Guards:
1. Basis-of-Design Product: Subject to compliance with requirements, provide product indicated on Drawings or comparable product by one of the following:
   a. Reliable Automatic Sprinkler Co., Inc. (The).
   b. Tyco Fire Products LP.
   c. Victaulic Company.
   d. Viking Corporation.
2. Standard: UL 199.
3. Type: Wire cage with fastening device for attaching to sprinkler.

2.6 ALARM DEVICES

A. Alarm-device types shall match piping and equipment connections.

B. Water-Flow Indicators:
1. Basis-of-Design Product: Subject to compliance with requirements, provide product indicated on Drawings or comparable product by one of the following:
   a. ADT Security Services, Inc.
   b. McDonnell & Miller.
   c. Potter Electric Signal Company, LLC.
   d. System Sensor.
   e. Viking Corporation.
   f. WATTS.
2. Standard: UL 346.
3. Water-Flow Detector: Electrically supervised.
4. Components: Two single-pole, double-throw circuit switches for isolated alarm and auxiliary contacts, 7 A, 125-V ac and 0.25 A, 24-V dc; complete with factory-set, field-adjustable retard element to prevent false signals and tamperproof cover that sends signal if removed.
5. Type: Paddle operated.
6. Pressure Rating: 250 psig.
7. Design Installation: Horizontal or vertical.

C. Valve Supervisory Switches:
1. Basis-of-Design Product: Subject to compliance with requirements, provide product indicated on Drawings or comparable product by one of the following:
   a. Fire-Lite Alarms, Inc.; a Honeywell International company.
   b. Kennedy Valve Company; a division of McWane, Inc.
   c. Potter Electric Signal Company, LLC.
   d. System Sensor.
2. Standard: UL 346.
3. Type: Electrically supervised.
4. Components: Single-pole, double-throw switch with normally closed contacts.
5. Design: Signals that controlled valve is in other than fully open position.

6. Electrical Components, Devices, and Accessories: Listed and labeled as defined in NFPA 70, by a qualified testing agency, and marked for intended location and application.

2.7 PRESSURE GAGES

A. Basis-of-Design Product: Subject to compliance with requirements, provide product indicated on Drawings or comparable product by one of the following:
   1. AGF Manufacturing, Inc.
   2. AMETEK, Inc.
   3. Ashcroft Inc.
   4. Brecco Corporation.
   5. WIKA Instrument Corporation.

B. Standard: UL 393.

C. Dial Size: 3-1/2- to 4-1/2-inch diameter.

D. Pressure Gage Range: 0 to 300 psig.

E. Label: Include "WATER" label on dial face.

PART 3 - EXECUTION

3.1 PREPARATION

A. Perform fire-hydrant flow test according to NFPA 13 and NFPA 291. Use results for system design calculations required in "Quality Assurance" Article.

B. Report test results promptly and in writing, within 30 days of contract award.

3.2 PIPING INSTALLATION

A. Locations and Arrangements: Drawing plans, schematics, and diagrams indicate general location and arrangement of piping. Install piping as indicated on approved working plans.
   1. Deviations from approved working plans for piping require written approval from authorities having jurisdiction. File written approval with Architect before deviating from approved working plans.
   2. Coordinate layout and installation of sprinklers with other construction that penetrates ceilings, including light fixtures, HVAC equipment, and partition assemblies.

B. Piping Standard: Comply with NFPA 13 requirements for installation of sprinkler piping.

C. Install seismic restraints on piping. Comply with NFPA 13 requirements for seismic-restraint device materials and installation.

D. Use listed fittings to make changes in direction, branch takeoffs from mains, and reductions in pipe sizes.

E. Install unions adjacent to each valve in pipes NPS 2 and smaller.

F. Install flanges, flange adapters, or couplings for grooved-end piping on valves, apparatus, and equipment having NPS 2-1/2 and larger end connections.

G. Install "Inspector's Test Connections" in sprinkler system piping, complete with shutoff valve, and sized and located according to NFPA 13.

H. Install sprinkler piping with drains for complete system drainage.

I. Install sprinkler control valves, test assemblies, and drain risers adjacent to standpipes when sprinkler piping is connected to standpipes.

J. Install alarm devices in piping systems.

K. Install hangers and supports for sprinkler system piping according to NFPA 13. Comply with requirements for hanger materials in NFPA 13. In seismic-rated areas, refer to Section 210548 "Vibration and Seismic Controls for Fire-Suppression Piping and Equipment." All hangers and supports and associated hardware shall be galvanized carbon steel or stainless steel.

L. Install pressure gages on riser or feed main, at each sprinkler test connection, and at top of each standpipe. Include pressure gages with connection not less than NPS 1/4 and with soft-metal seated globe valve, arranged for draining pipe between gage and valve. Install gages to permit removal, and install where they are not subject to freezing.

M. Fill sprinkler system piping with water.

N. Install sleeves for piping penetrations of walls, ceilings, and floors. Comply with requirements for sleeves specified in Section 210517 "Sleeves and Sleeve Seals for Fire-Suppression Piping."

O. Install sleeve seals for piping penetrations of concrete walls and slabs. Comply with requirements for sleeve seals specified in Section 210517 "Sleeves and Sleeve Seals for Fire-Suppression Piping."

P. Install escutcheons for piping penetrations of walls, ceilings, and floors. Comply with requirements for escutcheons specified in Section 210518 "Escutcheons for Fire-Suppression Piping."

3.3 JOINT CONSTRUCTION

A. Install couplings, flanges, flanged fittings, unions, nipples, and transition and special fittings that have finish and pressure ratings same as or higher than system's pressure rating for aboveground applications unless otherwise indicated.

B. Install unions adjacent to each valve in pipes NPS 2 and smaller.

C. Install flanges, flange adapters, or couplings for grooved-end piping on valves, apparatus, and equipment having NPS 2-1/2 and larger end connections.

D. Ream ends of pipes and tubes and remove burrs. Bevel plain ends of steel pipe.

E. Remove scale, slag, dirt, and debris from inside and outside of pipes, tubes, and fittings before assembly.

F. Flanged Joints: Select appropriate gasket material in size, type, and thickness suitable for water service. Join flanges with gasket and bolts according to ASME B31.9.

G. Threaded Joints: Thread pipe with tapered pipe threads according to ASME B1.20.1. Cut threads full and clean using sharp dies. Ream threaded pipe ends to remove burrs and restore full ID. Join pipe fittings and valves as follows:
   1. Apply appropriate tape or thread compound to external pipe threads.
   2. Damaged Threads: Do not use pipe or pipe fittings with threads that are corroded or damaged.

H. Welded Joints: Construct joints according to AWS D10.12M/D10.12, using qualified processes and welding operators according to "Quality Assurance" Article.
   1. Shop weld pipe joints where welded piping is indicated. Do not use welded joints for galvanized-steel pipe.

I. Steel-Piping, Roll-Grooved Joints: Roll rounded-edge groove in end of pipe according to AWWA C606. Assemble coupling with housing, gasket, lubricant, and bolts. Join steel pipe and grooved-end fittings according to AWWA C606 for steel-pipe grooved joints.

J. Dissimilar-Material Piping Joints: Make joints using adapters compatible with materials of both piping systems.

3.4 VALVE AND SPECIALTIES INSTALLATION

A. Install listed fire-protection valves, trim and drain valves, specialty valves and trim, controls, and specialties according to NFPA 13 and authorities having jurisdiction.

B. Install listed fire-protection shutoff valves supervised open, located to control sources of water supply. Install permanent identification signs indicating portion of system controlled by each valve.

C. Specialty Valves:
   1. Install valves in vertical position for proper direction of flow, in main supply to system.
   2. Install alarm valves with bypass check valve and retarding chamber drain-line connection.

3.5 SPRINKLER INSTALLATION

A. Install sprinklers in suspended ceilings in center of narrow dimension of acoustical ceiling panels. Install swing joints in pipe drops for center of ceiling panel/tile installation.

B. Install dry-type sprinklers with water supply from heated space. Do not install pendent or sidewall, wet-type sprinklers in areas subject to freezing.

3.6 IDENTIFICATION

A. Install labeling and pipe markers on equipment and piping according to requirements in NFPA 13.

B. Identify system components, wiring, cabling, and terminals. Comply with requirements for identification specified in Section 260553 "Identification for Electrical Systems."

3.7 FIELD QUALITY CONTROL

A. Perform the following tests and inspections:
   1. Leak Test: After installation, charge systems and test for leaks. Repair leaks and retest until no leaks exist.

2. Test and adjust controls and safeties. Replace damaged and malfunctioning controls and equipment.
3. Flush, test, and inspect sprinkler systems according to NFPA 13, "Systems Acceptance" Chapter.
4. Energize circuits to electrical equipment and devices.
5. Coordinate with fire-alarm tests. Operate as required.
6. Coordinate with fire-pump tests. Operate as required.
7. Verify that equipment hose threads are same as local fire department equipment.

B. Sprinkler piping system will be considered defective if it does not pass tests and inspections.

C. Prepare test and inspection reports.

3.8 CLEANING

A. Clean dirt and debris from sprinklers.

B. Only sprinklers with their original factory finish are acceptable. Remove and replace any sprinklers that are painted or have any other finish than their original factory finish.

3.9 DEMONSTRATION

A. Engage a factory-authorized service representative to train Owner's maintenance personnel to adjust, operate, and maintain specialty valves.

3.10 PIPING SCHEDULE

A. Sprinkler specialty fittings may be used, downstream of control valves, instead of specified fittings.

B. Standard-pressure, wet-pipe sprinkler system, NPS 2 and smaller, shall be one of the following:
1. Standard-weight, black-steel pipe with threaded ends; uncoated, gray-iron threaded fittings; and threaded joints.
2. Standard-weight, black-steel pipe with roll-grooved ends; uncoated, grooved-end fittings for steel piping; grooved-end-pipe couplings for steel piping; and grooved joints.
3. Standard-weight, black-steel pipe with plain ends; steel welding fittings; and welded joints.

C. Standard-pressure, wet-pipe sprinkler system, NPS 2-1/2 to NPS 4, shall be one of the following:
1. Standard-weight, black-steel pipe with roll-grooved ends; uncoated, grooved-end fittings for steel piping; grooved-end-pipe couplings for steel piping; and grooved joints.
2. Standard-weight, black-steel pipe with plain ends; steel welding fittings; and welded joints.

D. Standard-pressure, wet-pipe sprinkler system, NPS 5 and larger, shall be one of the following:
1. Standard-weight, black-steel pipe with roll-grooved ends; uncoated, grooved-end fittings for steel piping; grooved-end-pipe couplings for steel piping; and grooved joints.
2. Standard-weight, black-steel pipe with plain ends; steel welding fittings; and welded joints.

3.11 SPRINKLER SCHEDULE

A. Use sprinkler types in subparagraphs below for the following applications:
   1. Rooms without Ceilings: Upright sprinklers.
   2. Rooms with Suspended Ceilings: Concealed sprinklers.
   3. Wall Mounting: Sidewall sprinklers.
   4. Spaces Subject to Freezing: Upright, pendent, dry sprinklers; and sidewall, dry sprinklers as indicated.

B. Provide sprinkler types in subparagraphs below with finishes indicated.
   1. Concealed Sprinklers: Rough brass, with factory-painted white cover plate.
   2. Upright and Sidewall Sprinklers: Chrome plated in finished spaces exposed to view; rough bronze in unfinished spaces not exposed to view; wax coated where exposed to acids, chemicals, or other corrosive fumes.

END OF SECTION 211313

MOVE YOUR ENVIRONMENT FORWARD

FOCUSSED PRE-RENOVATION ASBESTOS-CONTAINING MATERIAL SURVEY REPORT

Whitney Dining Hall
UCONN Storrs Campus
1346 Storrs Road
Storrs, Connecticut

Prepared For:

Mr. James H. Libby, AIA, LEED AP
University Planning Design & Construction
University of Connecticut
31 LeDoyt Road
Storrs, CT 06269-3038

Prepared By:

HRP Associates, Inc.
197 Scott Swamp Road
Farmington, CT 06032

HRP #: UCO0008.BA

Issued On: November 2, 2018

TABLE OF CONTENTS

1.0 INTRODUCTION 1

1.1 Background 1
1.2 Previous Asbestos-Containing Material Survey 1
1.3 Inspection Survey Limitations 2

2.0 ASBESTOS SURVEY 3

2.1 Methods 3
2.1.1 Building Inspection Procedure 3
2.1.2 Sampling Strategy and Methodology 3
2.2 Asbestos Inspection Results 4
2.2.1 Confirmed ACM 4
2.2.2 Presumed ACM 4
2.2.3 Confirmed Non-ACM 5

3.0 CONCLUSIONS AND RECOMMENDATIONS 6

4.0 LIMITATIONS ON WORK PRODUCT 7

FIGURES

Figures 1 Sub-Basement Asbestos Sample and ACM Location Plan
Figures 2 Basement Asbestos Sample and ACM Location Plan
Figures 3 First Floor Asbestos Sample and ACM Location Plan
Figures 4 Roof Asbestos Sample and ACM Location Plan

TABLES

Table 1 Limited Inventory of Suspect ACM & ACM List from Previous Inspections
Table 2 Suspect Asbestos-Containing Materials (ACM) and ACM List
Table 3 Asbestos-Containing Materials List

APPENDICES

Appendix A Asbestos Laboratory Analytical Report

1.0 INTRODUCTION

1.1 Background

UCONN retained HRP Associates, Inc. (HRP) to conduct a focused asbestos-containing material survey of the Whitney Dining Hall, located on the UCONN Storrs Campus, 1346 Storrs Road (the "site") in Storrs, Connecticut. The Whitney Dining Hall is a portion of the building known as the Edwina Whitney Residence Hall. The survey included building materials that may be impacted during proposed renovation activities, including an interior portion of the building and the roof portion associated with the dining hall.

The project consists of full interior renovation to the existing Whitney Dining Hall at UCONN. In addition to the interior renovation, this project will consist of a complete reroofing of the existing built-up roof over the dining hall. The total area of the proposed interior renovation is approximately 5,900 square feet. The survey is limited to the project renovation area specified by UCONN, as shown on the plans entitled "Whitney Dinning Hall Renovations", dated September 27, 2018.

The existing building was built in 1939 and was originally a residence hall for students. The construction reportedly consists of load bearing masonry exterior wall with a combination of steel, masonry and wood construction on the interior. The dining hall and kitchen spaces were added in the 1960s, infilling the east portion of the building. This addition consists of a steel structure with masonry exterior walls.

The investigation included a NESHAP-type asbestos-containing materials (ACM) survey focused on building materials that will potentially be disturbed during proposed renovation activities. The survey was conducted to determine the presence or absence of ACM to facilitate proper management of those materials prior to renovation activities. As such, this information can be utilized to design a plan for proper management of ACMs.

1.2 Previous Asbestos-Containing Material Survey

HRP was provided with a spreadsheet containing a list of materials previously analyzed for asbestos content for each room within the Whitney Hall complex. According to the Inventory of Suspect Asbestos-Containing Materials for Edwina Whitney Hall provided to HRP by UCONN, the following materials located in the area of future renovation were found to be ACM:

- White Hard Pack Pipe Insulation (in wet walls)
- Mudded Pipe Fitting Insulation (in wet walls)
- 9"x9" Brown With Streaks Floor Tile and Associated Mastic (Office 110/Room 130B)
- Cream Acoustical Ceiling Plaster (Entry 109/Stair S1A)

Given that these materials have been previously analyzed for asbestos content by UCONN, samples of these materials were not collected during this sampling event. A limited inventory for the areas scheduled to undergo renovation of suspect ACM and ACM is included in **Table 1**.

1.3 Inspection Survey Limitations

At the time of this HRP investigation, all interior areas and the roof of the project renovation area were accessible for physical and/or visual examination. As previously indicated, the survey was limited to building materials that may be impacted during proposed renovation activities for the specified project renovation area in the Whitney Dining Hall. Destructive sampling methods were used to obtain samples of representative building materials. However, the walls, floors, and ceilings were penetrated to identify construction materials in selected areas only.

2.0 ASBESTOS SURVEY

Connecticut State licensed Asbestos Inspector Alisa Werst (License Number 000736) conducted the asbestos survey of the subject building on October 18 and 19, 2018. The purpose of the survey was to identify and sample suspected friable and non-friable asbestos-containing materials (ACMs) throughout the interior of the subject building, and to determine the presence or absence of ACM prior to a future renovation. The ACM survey was conducted in accordance with the U. S. Environmental Protection Agency (EPA) National Emission Standards for Hazardous Air Pollutants (NESHAP) 40 CFR Part 61M pre-demolition survey, Asbestos Hazards Emergency Response Act (AHERA) regulations, 40 CFR Part 763, and State of Connecticut Department of Public Health (DPH) Asbestos Regulations (Section 19a-332a-1 through 19a-332a-16).

ACM is defined as those materials that contain an asbestos content greater than 1%. Materials that are confirmed to contain greater than 1% asbestos content must be abated prior to any impact by renovation or demolition activity.

2.1 Methods

2.1.1 Building Inspection Procedure

During the survey, the inspectors classified each suspect ACM as one of three types: (1) surfacing material applied by spray or trowel; (2) thermal system insulation (TSI) on pipes, tanks, boilers, and related features; or (3) miscellaneous material not classified as surfacing material or thermal system insulation. The inspector touched all assumed or suspected materials on all accessible surfaces including walls, floors, ceilings, structural members, and mechanical equipment to determine their friability or the extent to which the material, when dry, may be crumbled, pulverized, or reduced to powder by hand pressure.

2.1.2 Sampling Strategy and Methodology

Suspected ACM was first classified into homogeneous sampling areas. A homogeneous area contains material that is uniform in texture and appearance, was likely installed during the same time period, and is unlikely to consist of more than one type or formulation of material. The inspector collected samples from homogeneous areas. Multiple samples (1, 2, 3...) were collected from homogeneous areas, as appropriate.

Limited destructive sampling techniques were employed, and did not create a safety hazard or affect the overall integrity of the structure. To avoid disturbing the material any more than necessary and to minimize any unnecessary release of asbestos fibers during collection, the HRP inspector performed bulk sampling of suspect ACM in accordance with generally accepted procedures outlined in the EPA document "Guidance for Controlling Asbestos-Containing Materials in Buildings" (EPA-560/5-85-024, June 1985).

Each sample was collected using appropriate methods and placed in clean, sealable plastic bags and labeled with a unique sample identification number. Each bulk sample was given a unique sample number as follows:

"101818-2A"

- 101818 – The first number in the sample ID series represents the date of the sampling event.
- 2 – The second number in the sample ID series represents the numerical value given to each new homogeneous material (HMAT) identified during the inspection. In this example, the 2nd different homogenous material sampled.
- A – The last letter in the sequence is the sample letter in the HMAT series. In this case, it is the first sample taken of HMAT number 2. The second sample in the HMAT series would be letter B.

Homogenous building materials identified during the survey are documented in **Table 2.** Bulk samples of suspected ACM were submitted to EMSL Analytical, Inc. (EMSL), located in New York, New York for analysis of asbestos content. EMSL analyzed all layers of each bulk sample using Polarizing Light Microscopy (PLM). EMSL is an American Industrial Hygiene Association (AIHA) accredited laboratory.

2.2 Asbestos Inspection Results

Homogenous building materials (including non-ACMs and ACMs) identified during the survey are documented in **Table 2** of this report, which includes material descriptions, sample locations, sample number, and asbestos content. Sample locations and ACM locations are provided on **Figures 1, 2, 3,** and **4**.

A total of 30 different homogeneous building materials were sampled and a total of 63 representative samples were submitted to EMSL for analysis. A copy of the laboratory analytical report is attached as **Appendix A**. The following sections provide a discussion of specific confirmed ACM and confirmed non-ACM identified during the survey.

2.2.1 Confirmed ACM

The results of PLM laboratory analysis indicated that the following materials are ACM:

- White Drain Bowl Insulation (Dining Room)

Additional ACM materials were also identified in the Inventory of Suspect Asbestos-Containing Materials for Edwina Whitney Hall provided to HRP. Material conditions, locations and estimated quantities are included in **Table 3**.

2.2.2 Presumed ACM

Any materials that are not identified and/or sampled as part of an asbestos survey should be assumed to contain asbestos until sampled and proven otherwise. Suspect ACM that cannot be sampled during an inspection would be classified as presumed ACM (PACM) if the material satisfied one or more of the following conditions: 1) the material was inaccessible, 2) sampling would potentially cause critical damage to the building system, or 3) sampling was inherently dangerous.

Building materials not scheduled to be disturbed during this renovation were not sampled at this time, to prevent damage.

2.2.3 Confirmed Non-ACM

Tables 1 and **2** include suspect materials that were sampled and determined to be non-ACM (1% or less than 1% asbestos detected). It is noted that fiberglass insulation was observed on pipes above the ceiling grid. By nature, fiberglass is classified as a non-ACM and, therefore, sampling of this material is not required. No older insulation materials were identified beneath the fiberglass insulation during the current asbestos survey.

3.0 CONCLUSIONS AND RECOMMENDATIONS

HRP conducted a focused asbestos survey of Whitney Dining Hall located at 1346 Storrs Road, UCONN Storrs Campus, Storrs, Connecticut. The investigation included a NESHAP-type asbestos-containing materials (ACM) survey focused on building materials that will potentially be disturbed during renovation and/or demolition activities for the specified project renovation area in the Whitney Dining Hall. This survey was conducted to determine the presence/absence of ACM for the subject building area to facilitate proper management of those materials prior to renovation and/or demolition activities. Based on the investigations, as documented in this report, HRP provides the following conclusions and recommendations below.

Based on the results of the laboratory analyses and results from prior asbestos inspection reports provided to HRP by UCONN as building inventory, the following asbestos containing materials are located within the renovation area:

- Drain Bowl Insulation
- White Hard Pack Pipe Insulation
- Mudded Pipe Fitting Insulation
- 9”x9” Brown With Streaks Floor Tile and Associated Mastic
- Cream Acoustical Ceiling Plaster

Materials conditions, locations and estimated quantities are included in **Table 3**. The cream acoustical ceiling plaster located in Entry 109 (Stair S1A) is not scheduled to be damaged during this renovation process.

All confirmed ACM must be appropriately abated in accordance with all applicable regulations prior to any proposed building renovation or demolition activities that could potentially disturb said material. Any previously unidentified suspect materials that are uncovered during abatement or demolition activities should be sampled for asbestos content prior to their disturbance.

HRP assumes no responsibility for the implementation or enforcement of the procedures, work practices, engineering controls, or other asbestos-control methods recommended, required or mentioned in this report. This report is not intended to be used as a bidding document or to replace abatement specifications.

4.0 LIMITATIONS ON WORK PRODUCT

All work product and reports provided by HRP in connection with the performance of any phase of Environmental Site Assessments, and any services related to remedial and post-remedial action, including all work performed under HRP's Terms & Conditions and any follow-up work is subject to the following limitations.

1. The observations described in the Project Report(s) are made under the stated conditions. The conclusions presented in the Report(s) are based solely upon the indicated services, and not on scientific tasks or procedures beyond the scope of described services or the time and budgetary constraints imposed by the Client.

2. In preparing Project Reports, HRP relies on certain representations made and information provided by federal, state and local officials, the Client and other parties referenced in the Project Reports, and on information contained in the files of federal, state and/or local agencies made available to HRP, at the time of the Project. To the extent that such information and files are missing, incomplete or not provided to HRP, HRP is not responsible. Although there may be some degree of overlap in the information provided by these various sources, HRP does not attempt to independently verify the accuracy or completeness of all information reviewed or received during the course of the Project. If the Client determines that information provided or made available to HRP from any source is incorrect or inaccurate, the Client should promptly notify HRP, whereupon HRP will issue a corrected Project Report.

3. Observations are made of the site and of structures on the site as indicated within the Project Report(s). Where access to portions of the site or to structures on the site is unavailable or limited, HRP renders no opinion as to the presence of potential contamination by hazardous substances, wastes or petroleum and chemical products and wastes. In addition, HRP renders no opinion as to the presence of indirect evidence relating to potential contamination by hazardous substances, wastes or petroleum and chemical products or wastes where direct observation of the interior walls, floors, or ceilings of a structure on a site is obstructed by objects or coverings on or over these surfaces.

4. The purpose of the Project Report(s) is to assess the physical characteristics of the subject site with respect to the potential presence of asbestos containing materials. HRP has not confirmed the compliance of present or past owners or operators of the site with federal, state, or local laws and regulations, environmental or otherwise.

5. The conclusions and recommendations contained in the Project Report(s) are based in part upon the data obtained from a limited number of samples obtained from widely spaced explorations. The nature and extent of variations between these locations may not become evident until further exploration. If variations or other latent conditions then appear evident, it will be necessary to re-evaluate the conclusions and recommendations of the Project Report(s).

6. If the conclusions and recommendations contained in the Project Report(s) are based, in part, upon various types of analyses, then the conclusions and recommendations are contingent upon the validity of such data. The analyses are performed for specific parameters and additional chemical constituents not searched for during the current study may be present at

the site. Where such analyses have been conducted by an outside laboratory, HRP has relied upon the data provided, and has not conducted an independent evaluation of the reliability of these tests. The data (if obtained) are reviewed and interpretations made in the Project Report(s). If indicated within the Project Report(s), some of these data may be preliminary "screening" level data and should be confirmed with quantitative analyses if more specific information is necessary. Should additional chemical data become available in the future, these data may alter the basis of the conclusions and recommendations presented in the Project Report(s).

7. It is recommended that HRP be retained to provide further engineering services during the conduct of further exploration or the construction and/or implementation of any remedial measures recommended in HRP's Project Report(s). This is to allow HRP and the Client to observe consistency with the concepts and recommendations contained therein, and to allow the development of changes to the remedial program in the event that conditions differ from those anticipated.

8. The services provided by HRP do not include legal advice. Legal counsel should be consulted regarding interpretation of relevant federal, state and local laws.

FIGURES

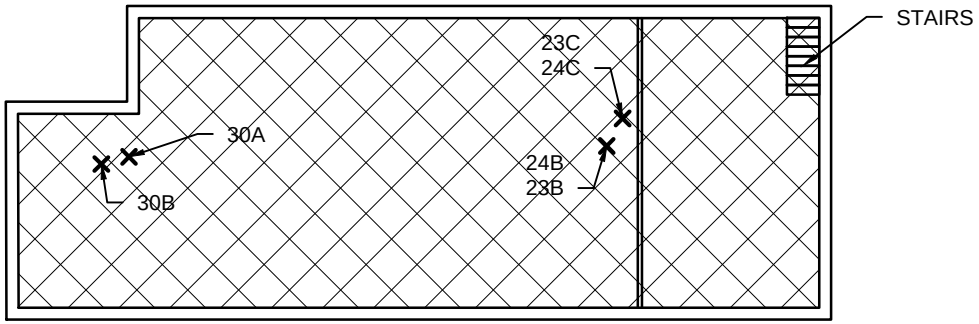

✕ ASBESTOS SAMPLE LOCATION

>1% ASBESTOS

ACOUSTICAL CEILING PLASTER (NOT TO BE IMPACTED DURING RENOVATION)

9" X 9" BROWN WITH STREAKS FLOOR TILE AND ASSOCIATED MASTIC

TSI WHITE HARD PACK INSTALLATION/MUDDED PIPE FITTING INSULATION

DB DRAIN BOWL INSULATION

AREA NOT SCHEDULED TO BE RENOVATED

NOTES:
1. ACM ONLY SHOWN IN AREAS SCHEDULED FOR RENOVATION.
2. TSI MAY BE CONCEALED BEHIND WALLS.

0 10' 20'

HRP
MOVE YOUR ENVIRONMENT FORWARD
197 SCOTT SWAMP ROAD
FARMINGTON, CT 06032
(860) 674-9570
HRPASSOCIATES.COM

SUB-BASEMENT ASBESTOS SAMPLE AND ACM LOCATION PLAN

UNIVERSITY OF CONNECTICUT
STORRS CAMPUS

WHITNEY DINING HALL
1346 STORRS ROAD
STORRS, CONNECTICUT

SCALE:	1" = 20'
ISSUE DATE:	10/31/2018
PROJECT NUMBER:	UCO0008.BA
SHEET NO.	Fig. 1

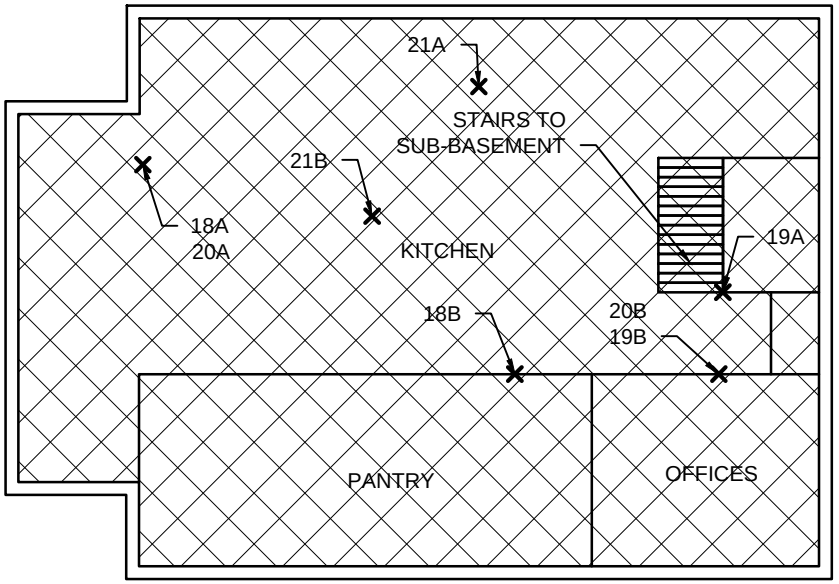

✕ ASBESTOS SAMPLE LOCATION

>1% ASBESTOS

ACOUSTICAL CEILING PLASTER (NOT TO BE IMPACTED DURING RENOVATION)

9" X 9" BROWN WITH STREAKS FLOOR TILE AND ASSOCIATED MASTIC

TSI WHITE HARD PACK INSTALLATION/MUDDED PIPE FITTING INSULATION

DB DRAIN BOWL INSULATION

AREA NOT SCHEDULED TO BE RENOVATED

NOTES:
1. ACM ONLY SHOWN IN AREAS SCHEDULED FOR RENOVATION.
2. TSI MAY BE CONCEALED BEHIND WALLS.

0 10' 20'

HRP
MOVE YOUR ENVIRONMENT FORWARD
197 SCOTT SWAMP ROAD
FARMINGTON, CT 06032
(860) 674-9570
HRPASSOCIATES.COM

BASEMENT ASBESTOS SAMPLE AND ACM LOCATION PLAN

UNIVERSITY OF CONNECTICUT
STORRS CAMPUS

WHITNEY DINING HALL
1346 STORRS ROAD
STORRS, CONNECTICUT

SCALE: 1" = 20'

ISSUE DATE: 10/31/2018

PROJECT NUMBER: UCO0008.BA

Fig. 2

SHEET NO.

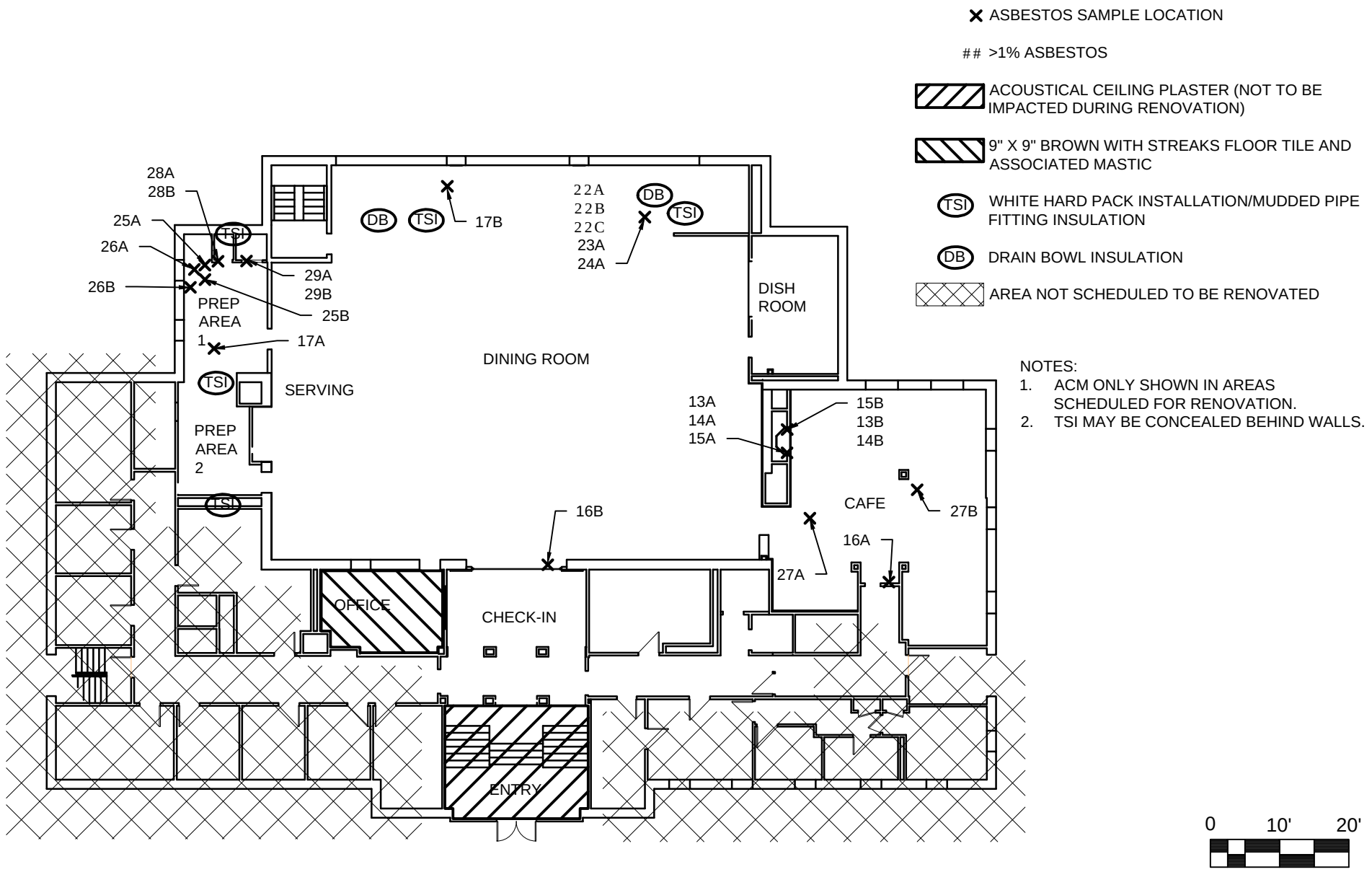

HRP
MOVE YOUR ENVIRONMENT FORWARD
197 SCOTT SWAMP ROAD
FARMINGTON, CT 06032
(860) 674-9570
HRPASSOCIATES.COM

FIRST FLOOR ASBESTOS SAMPLE AND ACM LOCATION PLAN

UNIVERSITY OF CONNECTICUT
STORRS CAMPUS

WHITNEY DINING HALL
1346 STORRS ROAD
STORRS, CONNECTICUT

SCALE:	1" = 20'
ISSUE DATE:	10/31/2018
PROJECT NUMBER:	UCO0008.BA

Fig. 3

SHEET NO.

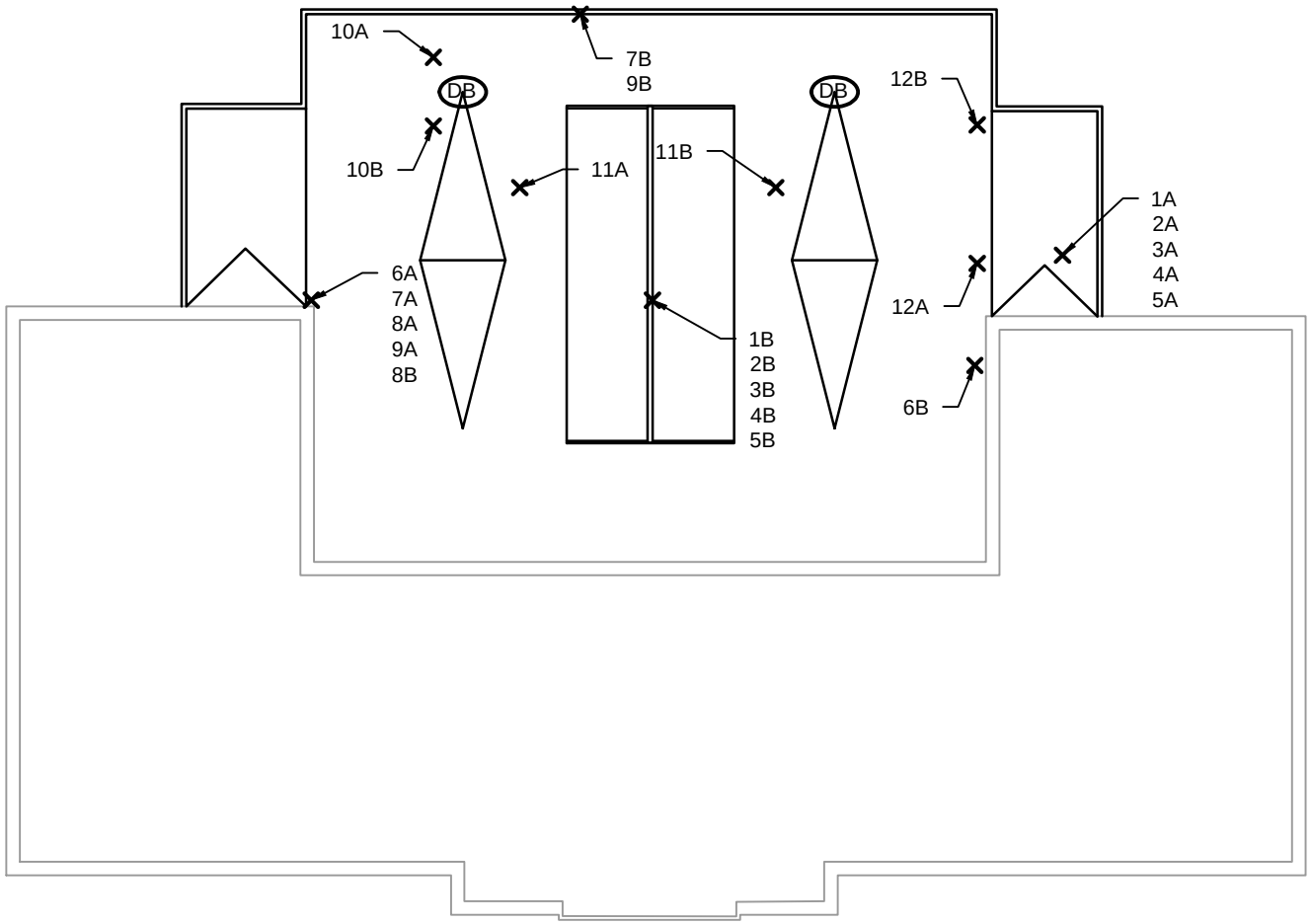

✕ ASBESTOS SAMPLE LOCATION

>1% ASBESTOS

ACOUSTICAL CEILING PLASTER (NOT TO BE IMPACTED DURING RENOVATION)

9" X 9" BROWN WITH STREAKS FLOOR TILE AND ASSOCIATED MASTIC

TSI WHITE HARD PACK INSTALLATION/MUDDED PIPE FITTING INSULATION

DB DRAIN BOWL INSULATION

AREA NOT SCHEDULED TO BE RENOVATED

NOTES:
1. ACM ONLY SHOWN IN AREAS SCHEDULED FOR RENOVATION.
2. TSI MAY BE CONCEALED BEHIND WALLS.

0 10' 20'

HRP
MOVE YOUR ENVIRONMENT FORWARD
197 SCOTT SWAMP ROAD
FARMINGTON, CT 06032
(860) 674-9570
HRPASSOCIATES.COM

ROOF ASBESTOS SAMPLE AND ACM LOCATION PLAN

UNIVERSITY OF CONNECTICUT
STORRS CAMPUS

WHITNEY DINING HALL
1346 STORRS ROAD
STORRS, CONNECTICUT

SCALE:	1" = 20'
ISSUE DATE:	10/31/2018
PROJECT NUMBER:	UCO0008.BA

Fig. 4

SHEET NO.

TABLES

TABLE 1
LIMITED INVENTORY OF SUSPECT ACM & ACM LIST
FROM PREVIOUS INSPECTIONS

WHITNEY DINING HALL
1346 STORRS ROAD
STORRS, CONNECTICUT

HRP #UCO0008.BA

Material Location on Demo. Drawings*	Material Location on UCONN Inventory	Material Description	Asbestos Content
Analytical Results for Previously Sampled Materials in the Renovation Area			
Prep Area 1 and Serving Line 104, Room 112	Kitchen Room 128	1'X1' Spline Ceiling Tile	ND
		Wall Plaster Skim Coat	ND
		Wall Plaster Base Coat	ND
	Wet Wall**	**White Hard Pack Insulation**	**35% Chrysotile**
		Mudded Pipe Fitting Insulation	**70% Chrysotile**
Prep Area 2, Room 113	Break Room 102	2'X2' Suspended Ceiling Tile (Fissured)	ND
		Wall Plaster Skim Coat	ND
		Wall Plaster Base Coat	ND
		6" Dark Blue Cove Base	ND
		Adhesive For 6" Cove Base	ND
		12"X12" Light Blue Floor Tile	ND
		12"X12" Blue Mottled Floor Tile	ND
		Mastic For 12"X12" Blue Mottled Floor Tile	ND
	Wet Wall**	**White Hard Pack Insulation**	**35% Chrysotile**
		Mudded Pipe Fitting Insulation	**70% Chrysotile**
Dining Room 105	Dining Area, Room 130	2'X2' Suspended Ceiling Tile (Textured/Pinhole)	ND
		Red Firestop Sealant	ND
		4" Dark Blue Cove Base	ND
		Adhesive For 4" Cove Base	ND
		12"X12" Tan Floor Tile	ND
		Mastic For 12"X12" Tan Floor Tile	ND
Office 110	Office 130B	Ceiling Plaster Skim Coat	ND
		Ceiling Plaster Base Coat	ND
		Wall Plaster Skim Coat	ND
		Wall Plaster Base Coat	ND
		9"X9" Brown With Streaks Floor Tile	**17.4% Chrysotile**
		Mastic For 9"X9" Brown With Streaks Floor Tile	**11.4% Chrysotile**

Material Location on Demo. Drawings*	Material Location on UCONN Inventory	Material Description	Asbestos Content
Dish Room 106	Dishwashing Room 132	2'X4' Suspended Ceiling Tile	ND
		Wall Glazing	ND
		Poured Flooring	ND
Café 107	Lounge 134	2'X2' Suspended Ceiling Tile (Textured/Pinhole)	ND
		Red Firestop Sealant	ND
		Wall Plaster Skim Coat	ND
		Wall Plaster Base Coat	ND
		4" Blue Cove Base	ND
		Adhesive For 4" Cove Base	ND
		12"X12" Light Blue Floor Tile	ND
		12"X12" Blue Mottled Floor Tile	ND
		Mastic For 12"X12" Blue Floor Tile	ND
Check-in 108	Corridor C1B	2'X2' Suspended Ceiling Tile (Fissured)	ND
		Wall Plaster Skim Coat	ND
		Wall Plaster Base Coat	ND
		6" Dark Blue Cove Base	ND
		Adhesive For 6" Cove Base	ND
		12"X12" Light Blue Floor Tile	ND
		12"X12" Blue Mottled Floor Tile	ND
		Mastic For 12"X12" Blue Floor Tile	ND
Entry 109	Stair S1A	**Acoustical Ceiling Plaster (Cream)**	**2% Chrysotile**
		Wall Plaster Skim Coat	ND
		Wall Plaster Base Coat	ND
		Radiator Panel Insulation Board	Not Sampled***
		Rubber Floor Adhesive	ND

ND = None Detected
Bold = Asbestos Detected >1%
* = Location designations as shown on the plans entitled “Whitney Dinning Hall Renovations”, dated September 27, 2018
Wet Wall** = Insulation assumed in areas where sinks are scheduled for demolition
Not Sampled*** = Material not to be damage during the renovation
This table lists materials sampled within the project renovation area only

TABLE 2
SUSPECT ASBESTOS-CONTAINING MATERIALS (ACM) & ACM LIST

WHITNEY DINING HALL
1346 STORRS ROAD
STORRS, CONNECTICUT

HRP #UCO0008.BA

Sample Designation	Sample Location	Material Description	Asbestos Content
Analytical Results for Materials Collected between October 18 and 19, 2018			
101818-1A	Roof Field- South	Black Tar In Gravel	ND
101818-1B	Roof Field- Center	Black Tar In Gravel	ND
101818-2A	Roof Field- South	Black Felt Paper	ND
101818-2B	Roof Field- Center	Black Felt Paper	ND
101818-3A	Roof Field- South	Black Tar On Felt Paper	ND
101818-3B	Roof Field- Center	Black Tar On Felt Paper	ND
101818-4A	Roof Field- South	Gray Perlite	ND
101818-4B	Roof Field- Center	Gray Perlite	ND
101818-5A	Roof Field- South	Gray Paper For Foam	ND
101818-5B	Roof Field- Center	Gray Paper For Foam	ND
101818-6A	Roof Edge- North	Gray Caulk at Brick	ND
101818-6B	Roof Edge- South	Gray Caulk at Brick	ND
101818-7A	Roof Edge- North	Black Flashing Tar On Surface	ND
101818-7B	Roof Edge- East	Black Flashing Tar On Surface	ND
101818-8A	Roof Edge- North	Brown Fiber Board Cant	ND
101818-8B	Roof Edge- North	Brown Fiber Board Cant	ND
101818-9A	Roof Edge- North	Black Flashing Tar At Base	ND
101818-9B	Roof Edge- East	Black Flashing Tar At Base	ND
101818-10A	Roof- North East	Black Tar On Pipe Vent	ND
101818-10B	Roof- Center	Black Tar On Pipe Vent	ND
101818-11A	Roof- North	Walking Path Black Mat Adhesive	ND
101818-11B	Roof- Center	Walking Path Black Mat Adhesive	ND
101818-12A	Roof- Hvac System	Black Pedestal Tar	ND
101818-12B	Roof- Hvac System	Black Pedestal Tar	ND
101818-13A	Cafe 107 (Room 134)	Tan Fire Brick	ND
101818-13B	Cafe 107 (Room 134)	Tan Fire Brick	ND
101818-14A	Cafe 107 (Room 134)	Gray Mortar For Tan Fiber Brick	ND
101818-14B	Cafe 107 (Room 134)	Gray Mortar For Tan Fiber Brick	ND
101818-15A	Cafe 107 (Room 134)	Gray Cementitious Material In Flue	ND
101818-15B	Cafe 107 (Room 134)	Gray Cementitious Material In Flue	ND
101818-16A	Cafe 107 (Room 134)	Black Glazing For Door Frame	ND
101818-16B	Dining Room 105 (Room 130)	Black Glazing For Door Frame	ND
101818-17A	Prep Area 1 (Room 128)	Yellow Terrazzo Floor	ND
101818-17B	Dining Room 105 (Room 130)	Yellow Terrazzo Floor	ND

Sample Designation	Sample Location	Material Description	Asbestos Content
101819-18A	Lower Kitchen By Dum Waiter	Gray Ceramic Cove Base Setting Compound	ND
101819-18B	Lower Kitchen By Pantry	Gray Ceramic Cove Base Setting Compound	ND
101819-19A	Lower Kitchen By Sub Base Stair	Black Sealant For Ceramic Cove Base	ND
101819-19B	Lower Kitchen By Office	Black Sealant For Ceramic Cove Base	ND
101819-20A	Lower Kitchen By Sub Base Stair	Gray Setting Compound For Ceramic Floor Tile	ND
101819-20B	Lower Kitchen By Office	Gray Setting Compound For Ceramic Floor Tile	ND
101819-21A	Lower Kitchen Prep Area	Gray Mortar For Ceramic Floor Tile	ND
101819-21B	Lower Kitchen Prep Area	Gray Mortar For Ceramic Floor Tile	ND
101819-22A	**Dining Room 105 (Room 130)**	**White Drain Bowl Insulation**	**10% Chrysotile**
101819-22B	**Dining Room 105 (Room 130)**	**White Drain Bowl Insulation**	**10% Chrysotile**
101819-22C	**Dining Room 105 (Room 130)**	**White Drain Bowl Insulation**	**8% Chrysotile**
101819-23A	Dining Room 105 (Room 130)	Tan Cloth Fiberglass Wrap	ND
101819-23B	Subbasement Mechanical	Tan Cloth Fiberglass Wrap	ND
101819-23C	Subbasement Mechanical	Tan Cloth Fiberglass Wrap	ND
101819-24A	Dining Room 105 (Room 130)	Silver Paper Foil Wrap For Fiberglass	ND
101819-24B	Subbasement Mechanical	Silver Paper Foil Wrap For Fiberglass	ND
101819-24C	Subbasement Mechanical	Silver Paper Foil Wrap For Fiberglass	ND
101819-25A	Prep Area 1 Room 112 (Room 128)	2'X2' White Wall Panel	ND
101819-25B	Prep Area 1 Room 112 (Room 128)	2'X2' White Wall Panel	ND
101819-26A	Prep Area 1 Room 112 (Room 128)	2'X2' White Gypsum Boards Ceiling Tile	ND
101819-26B	Prep Area 1 Room 112 (Room 128)	2'X2' White Gypsum Boards Ceiling Tile	ND
101819-27A	Cafe 107 (Room 134)	Black Paper On Concrete Deck	ND
101819-27B	Cafe 107 (Room 134)	Black Paper On Concrete Deck	ND
101819-28A	Prep Area 1 Room 112 (Room 128)	Gray Caulk At Janitor Closet Door Frame	ND

Sample Designation	Sample Location	Material Description	Asbestos Content
101819-28B	Prep Area 1 Room 112 (Room 128)	Gray Caulk At Janitor Closet Door Frame	ND
101819-29A	Prep Area 1 Room 112 (Room 128)	Yellow Caulk At Dum Waiter	ND
101819-29B	Prep Area 1 Room 112 (Room 128)	Yellow Caulk At Dum Waiter	ND
101819-30A	Subbasement Mechanical Room	Red Terracotta	ND
101819-30B	Subbasement Mechanical Room	RedTerracotta	ND

ND = None Detected
Bold = Asbestos Detected >1%
Location designations as shown on the plans entitled “Whitney Dinning Hall Renovations”, dated September 27, 2018
(Room #) = Room identification as seen on UCONN floor Plans
This table lists materials sampled that may be impacted by the proposed renovation activites within the project renovation area only

TABLE 3
ASBESTOS-CONTAINING MATERIALS ACM LIST

WHITNEY DINING HALL
1346 STORRS ROAD
STORRS, CONNECTICUT

HRP #UCO0008.BA

Material Description	Locations	Material Condition/Friability	Estimated Quantity*
9"X9" Brown With Streaks Floor Tile and Associated Mastic	Office 110 (Room 130B)	Good / Non-friable	100 SF
White Hard Pack Insulation and Mudded Pipe Fitting Insulation	Wet Wall for Janitors	Good / Friable	10 LF
	Wet Wall for Prep Area 1	Good / Friable	10 LF
	Wet Wall for Prep Area 1	Good / Friable	10 LF
	Above Ceiling in Dining Room	Good / Friable	5 LF
Acoustical Ceiling Plaster (Cream)	Entry 109 (Stair S1A)	Good / Friable	290 SF**
Drain Bowl Insulation	Dining Room 105 - 2 locations	Good / Friable	10 SF

* = Additional investigation may be required to verify quantity.
** = Material not scheduled for removal based on renovation plans
SF =Square Feet
LF =Linear Feet
Location designations as shown on the plans entitled “Whitney Dinning Hall Renovations”, dated September 27, 2018
(Room #) = Room identification as seen on UCONN floor Plans
Notes:
1. TSI may be concealed behind walls and in areas outside the scope of this renovation.
2. This table includes estimated quantities of ACMs that are located within the renovation area.
2. This table includes estimated quantities of ACMs that are provided for informational purposes only.
4. All quantities should be independently verified by the abatement contractor prior to bidding/abatemen
5. This table lists materials sampled that may be impacted by the proposed renovation activites within the project renovation area only.

APPENDIX A

Asbestos Laboratory Analytical Report

EMSL Analytical, Inc.

29 North Plains Highway, Unit # 4 Wallingford, CT 06492

Tel/Fax: (203) 284-5948 / (203) 284-5978

http://www.EMSL.com / wallingfordlab@emsl.com

EMSL Order:	241805596
Customer ID:	HRPA50
Customer PO:	UCO0008.BA
Project ID:	

Attention:	Alisa Werst	**Phone:**	(860) 674-9570
	HRP Associates, Inc.	**Fax:**	(860) 674-9624
	197 Scott Swamp Road	**Received Date:**	10/23/2018 10:00 AM
	Farmington, CT 06032-3149	**Analysis Date:**	10/27/2018 - 10/29/2018
		Collected Date:	

Project: UCO0008.BA/ WHITNEY DINING HALL- UCONN STORRS CAMPUS

Test Report: Asbestos Analysis of Bulk Materials via EPA 600/R-93/116 Method using Polarized Light Microscopy

			Non-Asbestos		Asbestos
Sample	**Description**	**Appearance**	**% Fibrous**	**% Non-Fibrous**	**% Type**
101818-1A *241805596-0001*	Roof field- south - black tar in gravel	Black Non-Fibrous Homogeneous		100% Non-fibrous (Other)	None Detected
101818-1B *241805596-0002*	Roof field- center - black tar in gravel	Black Non-Fibrous Homogeneous		100% Non-fibrous (Other)	None Detected
101818-2A *241805596-0003*	Roof field- south - black felt paper	Black Non-Fibrous Homogeneous	10% Glass	90% Non-fibrous (Other)	None Detected
101818-2B *241805596-0004*	Roof field- center - black felt paper	Black Fibrous Homogeneous	80% Glass	20% Non-fibrous (Other)	None Detected
101818-3A *241805596-0005*	Roof field- south - black tar on felt paper	Black Non-Fibrous Homogeneous		100% Non-fibrous (Other)	None Detected
101818-3B *241805596-0006*	Roof field- center - black tar on felt paper	Black Non-Fibrous Homogeneous	5% Glass	95% Non-fibrous (Other)	None Detected
101818-4A *241805596-0007*	Roof field- south - perlite	Gray Fibrous Homogeneous	45% Cellulose	45% Perlite 10% Non-fibrous (Other)	None Detected
101818-4B *241805596-0008*	Roof field- center - perlite	Gray Non-Fibrous Homogeneous	20% Cellulose	40% Perlite 40% Non-fibrous (Other)	None Detected
101818-5A *241805596-0009*	Roof field- south - gray paper for foam	Gray Fibrous Homogeneous	55% Cellulose 35% Glass	10% Non-fibrous (Other)	None Detected
101818-5B *241805596-0010*	Roof field- center - gray paper for foam	Brown Fibrous Homogeneous	80% Cellulose	20% Non-fibrous (Other)	None Detected
101818-6A *241805596-0011*	Roof edge- north - gray caulk @ brick	Gray Non-Fibrous Homogeneous		100% Non-fibrous (Other)	None Detected
101818-6B *241805596-0012*	Roof edge- south - gray caulk @ brick	Gray Non-Fibrous Homogeneous		100% Non-fibrous (Other)	None Detected
101818-7A *241805596-0013*	Roof edge- north - flashing tar on surface	Black Non-Fibrous Homogeneous	15% Cellulose	85% Non-fibrous (Other)	None Detected
101818-7B *241805596-0014*	Roof edge- east - flashing tar on surface	Black Non-Fibrous Homogeneous	30% Cellulose	70% Non-fibrous (Other)	None Detected
101818-8A *241805596-0015*	Roof edge- north - brown fiber board can	Brown Fibrous Homogeneous	95% Cellulose	5% Non-fibrous (Other)	None Detected
101818-8B *241805596-0016*	Roof edge- north - brown fiber board can	Brown Non-Fibrous Homogeneous	90% Cellulose	10% Non-fibrous (Other)	None Detected

Initial report from: 10/29/2018 17:33:44

EMSL Analytical, Inc.

29 North Plains Highway, Unit # 4 Wallingford, CT 06492

Tel/Fax: (203) 284-5948 / (203) 284-5978

http://www.EMSL.com / wallingfordlab@emsl.com

EMSL Order:	241805596
Customer ID:	HRPA50
Customer PO:	UCO0008.BA
Project ID:	

Test Report: Asbestos Analysis of Bulk Materials via EPA 600/R-93/116 Method using Polarized Light Microscopy

			Non-Asbestos		Asbestos
Sample	**Description**	**Appearance**	**% Fibrous**	**% Non-Fibrous**	**% Type**
101818-9A *241805596-0017*	Roof edge- north - black flashing tar at base	Black Non-Fibrous Homogeneous		100% Non-fibrous (Other)	None Detected
101818-9B *241805596-0018*	Roof edge- east - black flashing tar at base	Brown/Black Non-Fibrous Homogeneous	50% Cellulose	50% Non-fibrous (Other)	None Detected
101818-10A *241805596-0019*	Roof- north east - black tar on pipe vent	Black Non-Fibrous Homogeneous		100% Non-fibrous (Other)	None Detected
101818-10B *241805596-0020*	Roof- center - black tar on pipe vent	Black Non-Fibrous Homogeneous		100% Non-fibrous (Other)	None Detected
101818-11A *241805596-0021*	Roof- north - walking path mat adhesive	Black Fibrous Homogeneous	15% Cellulose	85% Non-fibrous (Other)	None Detected
101818-11B *241805596-0022*	Roof- center - walking path mat adhesive	Black Non-Fibrous Homogeneous		100% Non-fibrous (Other)	None Detected
101818-12A *241805596-0023*	Roof- HVAC system - black pedestal tar	Black Non-Fibrous Homogeneous		100% Non-fibrous (Other)	None Detected
101818-12B *241805596-0024*	Roof- HVAC system - black pedestal tar	Black Non-Fibrous Homogeneous		100% Non-fibrous (Other)	None Detected
101818-13A *241805596-0025*	Café 107 (room 134) - tan fire brick	Tan Non-Fibrous Homogeneous		5% Quartz 95% Non-fibrous (Other)	None Detected
101818-13B *241805596-0026*	Café 107 (room 134) - tan fire brick	Gray Non-Fibrous Homogeneous		2% Quartz 98% Non-fibrous (Other)	None Detected
101818-14A *241805596-0027*	Café 107 (room 134) - gray mortar for tan fiber brick	Gray Non-Fibrous Homogeneous		5% Quartz 95% Non-fibrous (Other)	None Detected
101818-14B *241805596-0028*	Café 107 (room 134) - gray mortar for tan fiber brick	Gray Non-Fibrous Homogeneous		2% Quartz 98% Non-fibrous (Other)	None Detected
101818-15A *241805596-0029*	Café 107 (room 134) - gray cementitious material in flue	Gray Non-Fibrous Homogeneous		15% Quartz 85% Non-fibrous (Other)	None Detected
101818-15B *241805596-0030*	Café 107 (room 134) - gray cementitious material in flue	Gray Non-Fibrous Homogeneous		10% Quartz 90% Non-fibrous (Other)	None Detected
101818-16A *241805596-0031*	Café 107 (room 134) - black glazing for door frame	Black Non-Fibrous Homogeneous	5% Cellulose 10% Synthetic	85% Non-fibrous (Other)	None Detected
101818-16B *241805596-0032*	Dining room 105 (room 130) - black glazing for door frame	Black Non-Fibrous Homogeneous	<1% Cellulose 2% Synthetic	98% Non-fibrous (Other)	None Detected
101818-17A *241805596-0033*	Prep area 1 (room 128) - terrazzo floor	Tan Non-Fibrous Homogeneous		5% Quartz 95% Non-fibrous (Other)	None Detected
101818-17B *241805596-0034*	Dining room 105 (room 130) - terrazzo floor	Tan Non-Fibrous Homogeneous	<1% Cellulose	2% Quartz 98% Non-fibrous (Other)	None Detected

Initial report from: 10/29/2018 17:33:44

EMSL Analytical, Inc.
29 North Plains Highway, Unit # 4 Wallingford, CT 06492
Tel/Fax: (203) 284-5948 / (203) 284-5978
http://www.EMSL.com / wallingfordlab@emsl.com

EMSL Order:	241805596
Customer ID:	HRPA50
Customer PO:	UCO0008.BA
Project ID:	

Test Report: Asbestos Analysis of Bulk Materials via EPA 600/R-93/116 Method using Polarized Light Microscopy

			Non-Asbestos		Asbestos
Sample	**Description**	**Appearance**	**% Fibrous**	**% Non-Fibrous**	**% Type**
101819-18A *241805596-0035*	Lower kitchen by dum water - ceramic cove base setting compound	Gray Non-Fibrous Homogeneous		5% Quartz 95% Non-fibrous (Other)	None Detected
101819-18B *241805596-0036*	Lower kitchen by pantry - ceramic cove base setting compound	Gray Non-Fibrous Homogeneous		2% Quartz 98% Non-fibrous (Other)	None Detected
101819-19A *241805596-0037*	Lower kitchen by sub base stair - black sealant for ceramic cove base	Black Non-Fibrous Homogeneous		100% Non-fibrous (Other)	None Detected
101819-19B *241805596-0038*	Lower kitchen by office - black sealant for ceramic cove base	Black Non-Fibrous Homogeneous		100% Non-fibrous (Other)	None Detected
101819-20A *241805596-0039*	Lower kitchen by sub base stair - gray setting compound for CFT	Gray Non-Fibrous Homogeneous		5% Quartz 95% Non-fibrous (Other)	None Detected
101819-20B *241805596-0040*	Lower kitchen by office - gray setting compound for CFT	Gray Non-Fibrous Homogeneous	<1% Cellulose	2% Quartz 98% Non-fibrous (Other)	None Detected
101819-21A *241805596-0041*	Lower kitchen prep area - gray mortar for CFT	Gray Non-Fibrous Homogeneous		15% Quartz 85% Non-fibrous (Other)	None Detected
101819-21B *241805596-0042*	Lower kitchen prep area - gray mortar for CFT	Gray Non-Fibrous Homogeneous		5% Quartz 95% Non-fibrous (Other)	None Detected
101819-22A *241805596-0043*	Dining room 105 (room 130) - drain bowl insulation	Tan Fibrous Homogeneous	85% Min. Wool	5% Non-fibrous (Other)	10% Chrysotile
101819-22B *241805596-0044*	Dining room 105 (room 130) - drain bowl insulation	Tan Fibrous Homogeneous	85% Min. Wool	5% Non-fibrous (Other)	10% Chrysotile
101819-22C *241805596-0045*	Dining room 105 (room 130) - drain bowl insulation	Gray Fibrous Homogeneous		92% Non-fibrous (Other)	8% Chrysotile
101819-23A *241805596-0046*	Dining room 105 (room 130) - cloth fiberglass wrap	Tan Fibrous Homogeneous	98% Cellulose	2% Non-fibrous (Other)	None Detected
101819-23B *241805596-0047*	Subbasement mechanical - cloth fiberglass wrap	Tan Fibrous Homogeneous	98% Cellulose	2% Non-fibrous (Other)	None Detected
101819-23C *241805596-0048*	Subbasement mechanical - cloth fiberglass wrap	Tan Fibrous Homogeneous	90% Cellulose	10% Non-fibrous (Other)	None Detected
101819-24A *241805596-0049*	Dining room 105 (room 130) - paper foil wrap for fiberglass	Gray/Silver Fibrous Homogeneous	80% Cellulose	20% Non-fibrous (Other)	None Detected
101819-24B *241805596-0050*	Subbasement mechanical - paper foil wrap for fiberglass	Tan/Black/Silver Fibrous Homogeneous	80% Cellulose	20% Non-fibrous (Other)	None Detected
101819-24C *241805596-0051*	Subbasement mechanical - paper foil wrap for fiberglass	Tan/Silver Fibrous Homogeneous	85% Cellulose	15% Non-fibrous (Other)	None Detected
101819-25A *241805596-0052*	Prep area 1 room 112 (room 128) - 2'x2' wall panel	Tan Fibrous Homogeneous	45% Cellulose 45% Min. Wool	10% Non-fibrous (Other)	None Detected

Initial report from: 10/29/2018 17:33:44

EMSL Analytical, Inc.

29 North Plains Highway, Unit # 4 Wallingford, CT 06492

Tel/Fax: (203) 284-5948 / (203) 284-5978

http://www.EMSL.com / wallingfordlab@emsl.com

EMSL Order:	241805596
Customer ID:	HRPA50
Customer PO:	UCO0008.BA
Project ID:	

Test Report: Asbestos Analysis of Bulk Materials via EPA 600/R-93/116 Method using Polarized Light Microscopy

			Non-Asbestos		Asbestos
Sample	**Description**	**Appearance**	**% Fibrous**	**% Non-Fibrous**	**% Type**
101819-25B *241805596-0053*	Prep area 1 room 112 (room 128) - 2'x2' wall panel	Tan Fibrous Homogeneous	45% Cellulose 30% Min. Wool	25% Non-fibrous (Other)	None Detected
101819-26A *241805596-0054*	Prep area 1 room 112 (room 128) - 2'x2' gypsum boards ceiling tile	Brown/Gray Fibrous Homogeneous	25% Cellulose	75% Non-fibrous (Other)	None Detected
101819-26B *241805596-0055*	Prep area 1 room 112 (room 128) - 2'x2' gypsum boards ceiling tile	Brown/Gray Non-Fibrous Homogeneous		100% Non-fibrous (Other)	None Detected
101819-27A *241805596-0056*	Café 107 (room 134) - black paper on concrete deck	Brown/Tan Fibrous Homogeneous	98% Cellulose	2% Non-fibrous (Other)	None Detected
101819-27B *241805596-0057*	Café 107 (room 134) - black paper on concrete deck	Brown Fibrous Homogeneous	85% Cellulose	15% Non-fibrous (Other)	None Detected
101819-28A *241805596-0058*	Prep area 1 room 112 (room 128) - caulk at janitor closet door frame	Tan Non-Fibrous Homogeneous	10% Fibrous (Other)	90% Non-fibrous (Other)	None Detected
101819-28B *241805596-0059*	Prep area 1 room 112 (room 128) - caulk at janitor closet door frame	Tan Non-Fibrous Homogeneous		100% Non-fibrous (Other)	None Detected
101819-29A *241805596-0060*	Prep area 1 room 112 (room 128) - caulk at dum waiter	Tan Non-Fibrous Homogeneous	10% Fibrous (Other)	90% Non-fibrous (Other)	None Detected
101819-29B *241805596-0061*	Prep area 1 room 112 (room 128) - caulk at dum waiter	Tan Non-Fibrous Homogeneous	2% Fibrous (Other)	98% Non-fibrous (Other)	None Detected
101819-30A *241805596-0062*	Subbasement mechanical room - terracotta	Red Non-Fibrous Homogeneous		2% Quartz 98% Non-fibrous (Other)	None Detected
101819-30B *241805596-0063*	Subbasement mechanical room - terracotta	Orange Non-Fibrous Homogeneous		2% Quartz 98% Non-fibrous (Other)	None Detected

Analyst(s)

Almedina Hodzic (30)

Quetcy Castro Romero (33)

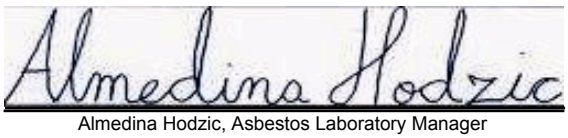

Almedina Hodzic, Asbestos Laboratory Manager
or Other Approved Signatory

EMSL maintains liability limited to cost of analysis. The above analyses were performed in general compliance with Appendix E to Subpart E of 40 CFR (previously EPA 600/M4-82-020 "Interim Method"), but augmented with procedures outlined in the 1993 ("final") version of the method. This report relates only to the samples reported above, and may not be reproduced, except in full, without written approval by EMSL. EMSL bears no responsibility for sample collection activities or analytical method limitations. Interpretation and use of test results are the responsibility of the client. All samples received in acceptable condition unless otherwise noted. This report must not be used by the client to claim product certification, approval, or endorsement by NVLAP, NIST or any agency of the federal government. EMSL recommends gravimetric reduction for all non-friable organically bound materials prior to analysis. Estimation of uncertainty is available on request.

Samples analyzed by EMSL Analytical, Inc. Wallingford, CT NVLAP Lab Code 200700-0,

Initial report from: 10/29/2018 17:33:44

EMSL ANALYTICAL, INC.
LABORATORY•PRODUCTS•TRAINING

Asbestos Bulk Building Material Chain of Custody

EMSL Order Number (*Lab Use Only*): 241805596

EMSL ANALYTICAL, INC.
200 ROUTE 130 NORTH
CINNAMINSON, NJ 08077
PHONE: (800) 220-3675
FAX: (856) 786-5974

Company: HRP Associates	**EMSL-Bill to:** ☐ Same ☐ Different If Bill to is Different note instructions in Comments** *Third Party Billing requires written authorization from third party*
Street: 197 Scott Swamp Road	
City: Farmington **State/Province:** CT	**Zip/Postal Code:** 06032 **Country:** USA
Report To (Name): Alisa Werst	**Telephone #:** 203-668-4665, 860-674-9570 x148
Email Address: alisa.werst@hrpassociates.com	**Fax #:** **Purchase Order:**
Project Name/Number: UCOQQQ8.BA	**Please Provide Results:** ☐ Fax ☒ Email
U.S. State Samples Taken:	**CT Samples:** ☒ Commercial/Taxable ☐ Residential/Tax Exempt

Turnaround Time (TAT) Options* – Please Check

☐ 3 Hour ☐ 6 Hour ☐ 24 Hour ☐ 48 Hour ☐ 72 Hour ☐ 96 Hour ☒ 1 Week ☐ 2 Week

**For TEM Air 3 hr through 6 hr, please call ahead to schedule.*There is a premium charge for 3 Hour TEM AHERA or EPA Level II TAT. You will be asked to sign an authorization form for this service. Analysis completed in accordance with EMSL's Terms and Conditions located in the Analytical Price Guide.*

PLM - Bulk (reporting limit)	TEM – Bulk
☒ PLM EPA 600/R-93/116 (<1%)	☐ TEM EPA NOB – EPA 600/R-93/116 Section 2.5.5.1
☐ PLM EPA NOB (<1%)	☐ NY ELAP Method 198.4 (TEM)
Point Count ☐ 400 (<0.25%) ☐ 1000 (<0.1%)	☐ Chatfield Protocol (semi-quantitative)
Point Count w/Gravimetric ☐ 400 (<0.25%) ☐ 1000 (<0.1%)	☐ TEM % by Mass – EPA 600/R-93/116 Section 2.5.5.2
☐ NIOSH 9002 (<1%)	☐ TEM Qualitative via Filtration Prep Technique
☐ NY ELAP Method 198.1 (friable in NY)	☐ TEM Qualitative via Drop Mount Prep Technique
☐ NY ELAP Method 198.6 NOB (non-friable-NY)	**Other**
☐ OSHA ID-191 Modified	☐
☐ Standard Addition Method	

☐ **Check For Positive Stop – Clearly Identify Homogenous Group** **Date Sampled:** 10-(18-19)-18

Samplers Name: Alisa Werst **Samplers Signature:** [signature]

Sample #	HA #	Sample Location	Material Description
		see next pages	

RECEIVED
OCT 23 2018
BY [initials] 10:00am
Fax 8133546066233

Client Sample # (s): - **Total # of Samples:** 63

Relinquished (Client): [signature] **Date:** 10-19-18 **Time:** 1500

Received (Lab): **Date:** **Time:**

Comments/Special Instructions: Whitney Dining Hall - UCONN Storrs campus

EMSL ANALYTICAL, INC.
LABORATORY • PRODUCTS • TRAINING

Asbestos Bulk Building Material Chain of Custody

EMSL Order Number (*Lab Use Only*):

241805596

EMSL ANALYTICAL, INC
200 ROUTE 130 NORTH
CINNAMINSON, NJ 08077
PHONE: (800) 220-3675
FAX: (856) 786-5974

Additional Pages of the Chain of Custody are only necessary if needed for additional sample information

Sample #	HA #	Sample Location	Material Description
101818-[illegible]	1A	Roof Field - south	Black tar in gravel
	1B	Roof Field - center	" "
	2A	Roof Field - south	Black Felt paper
	2B	" " center	" "
	3A	Roof Field - south	Black tar on Felt paper
	3B	" " center	" "
	4A	Roof Field - south	Perlite
	4B	" " center	" "
	5A	Roof Field - south	gray paper For Foam
	5B	" " - center	" "
	6A	Roof edge - North	gray caulk @ brick
	6B	Roof edge - south	" "
	7A	Roof edge - North	Flashing tar on surface
	7B	Roof edge - East	" "
	8A	Roof edge - North	Brown Fiber board cant
	8B	Roof edge - North	" "
	9A	Roof edge - North	Black Flashing tar at base ~~brick~~
	9B	Roof edge - east	" "
	10A	Roof - North East	black tar on pipe vent
	10B	Roof - center	" "
	11A	Roof - North	Walking path mat adhesive
	11B	Roof - center	" "
	12A	Roof HVAC system	Black Pedistal tar
	12B	" "	" "

*Comments/Special Instructions:

RECEIVED
OCT 23 2018
By

Controlled Document – Asbestos COC – R6 – 11/29/2012

EMSL ANALYTICAL, INC.
LABORATORY • PRODUCTS • TRAINING

Asbestos Bulk Building Material Chain of Custody

EMSL Order Number (*Lab Use Only*): 241805596

EMSL ANALYTICAL, INC
200 ROUTE 130 NORTH
CINNAMINSON, NJ 08077
PHONE: (800) 220-3675
FAX: (856) 786-5974

Additional Pages of the Chain of Custody are only necessary if needed for additional sample information

Sample #	HA #	Sample Location	Material Description
101818-	13A	Cafe 107 (Room 134)	tan Fire brick
	13B	" "	" "
	14A	" "	gray mortar For tan Firebrick
	14B	" "	" "
	15A	" "	gray cementitious material in FW
	15B	" "	" "
	16A	" "	Black glazing For door Frame
	16B	Dining Room 105 (Room 130)	" "
	17A	~~Terrazzo~~ Prep area 1 (Room 128)	Terrazzo Floor
	17B	Dining Room 105 (Room 130)	" "
101918-	18A	Lower Kitchen by dum water	ceramic covebase setting compound
	18B	" " pantry	" "
	19A	Lower Kitchen by sub. base stair	Black Sealant For ceramic covebase
	19B	" " office	" "
	20A	Lower Kitchen by sub. base stair	gray setting compound For cFT
	20B	" " office	" "
	21A	Lower Kitchen prep area	gray mortar For cFT
	21B	" "	" "
	22A	Dining Room 105 (Room 130)	Drain bowl insulation
	22B	" "	↓
	22C	" "	↓
	23A	Dining Room 105 (Room 130)	cloth Fiberglass wrap
	23B	Subbasement Mechanical	↓
	23C	" "	↓

***Comments/Special Instructions:**

RECEIVED
OCT 23 2018
By

Page 3 of 4 pages

Controlled Document – Asbestos COC – R6 – 11/29/2012

EMSL ANALYTICAL, INC.
LABORATORY • PRODUCTS • TRAINING

Asbestos Bulk Building Material Chain of Custody

EMSL Order Number (*Lab Use Only*): 241805596

EMSL ANALYTICAL, INC
200 ROUTE 130 NORTH
CINNAMINSON, NJ 08077
PHONE: (800) 220-3675
FAX: (856) 786-5974

Additional Pages of the Chain of Custody are only necessary if needed for additional sample information

Sample #	HA #	Sample Location	Material Description
101918	24A	Dining Room 105 (Room 130)	Paper Foil WRAP FOR Fiberglass
	24B	sub basement Mechanical	" "
	24C	" "	" "
	25A	Prep area 1. Room 112 (Room 128)	2'x2' gyp wall Panel
	25B	"	" "
	26A	"	2'x2' gypsumboards ceiling tile
	26B	"	" "
	27A	cafe 107 (Room 134)	Black paper on concrete deck
	27B	" "	" "
	28A	Prep area 1 Room 112 (Room 128)	caulk at janitor closet door Frame
	28B	" "	" "
	29A	" "	caulk at dum waiter
	29B	" "	" "
	30A	sub basement Mechanical Room	Terracotta
	30B	" "	" "

RECEIVED
OCT 23 2018
By

*Comments/Special Instructions:

Page 4 of ____ pages

F. SCHEDULE OF UNIT PRICES: Revised 11/30/18

All rates are inclusive of all costs of wages, applicable taxes, benefits, applicable insurance. The rates provided will be negotiated and included as part of the contract and of your subcontracts. The Unit Prices herein shall remain valid for the life of the project and include all costs for a complete installation. Unit prices are good for both adds and deducts.

A. Unit Price No. 1 – Brick Masonry Repair:

1. **Description: Repair of the original brick exterior wall that is concealed behind the furred wall that is to be demolished. Repair as specified in Section 040120 – Brick Masonry Repair.**
2. **Quantity Allowance: Coordinate unit price with allowance adjustment requirements in Division 01 Section "Allowances."**

$_____ Per Square Foot of Wall Repaired

B. Unit Price No. 2 – Brick Infill:

1. **Description: Single-wythe infill of openings in the original brick exterior wall that is concealed behind the furred wall that is to be demolished. Infill as specified in Section 040120 – Brick Masonry Repair.**
2. **Quantity Allowance: Coordinate unit price with allowance adjustment requirements in Division 01 Section "Allowances."**

$_____ Per Square Foot of Wall

C. Unit Price No. 3 – Roof Deck:

1. **Description: Removal and replacement of deteriorated steel roof deck.**
2. **Quantity Allowance: Coordinate unit price with allowance adjustment requirements in Division 01 Section "Allowances."**

$_____ Per Square Foot of Roof Deck

D. Unit Price No. 4 – Basement Ceiling Grid Removal and Replacement:

1. **Description: Salvage existing ceiling panels. Remove and replace existing ceiling grid as specified in Section 095110 Acoustical Panel Ceilings to allow utility work. Reinstall salvaged ceiling panels.**
2. **Unit of Measurement: Square foot of ceiling.**

$_____ Per Square Foot of Ceiling

E. Unit Price No. 5 – Existing Terrazzo Crack Repair:

1. **Description: Repair existing cracks in terrazzo flooring. Repair cracks as specified in Section 094300 Terrazzo Repair.**
2. **Unit of Measurement: Square foot of ceiling.**

$_____ Per Linear Foot of Cracks

End of Unit Prices

G. SCHEDULE OF VALUES: Revised 11/30/18

The undersigned agrees that the Schedule of Values submitted with this Bid is a true representation of the distribution of the costs of this project and equals the Stipulated Sum shown above. The Schedule of Values is an integral part of this proposal. Please indicate N/A for those divisions of work not applicable. The costs provided below include the complete cost for furnishing and installing of materials, labor, and equipment required to provide the complete scope of work for each specified division (includes the costs of applicable taxes, insurance, bonds, overhead, profit, small tools, travel, parking, supervision, etc.). The "TOTAL" price must equal your total lump sum bid proposal.

Division	Group	
01	General Conditions	$
02	Existing Conditions	$
04	Masonry	$
05	Metals	$
06	Wood, Plastics, Composites	$
07	Thermal & Moisture Protection	$
08	Openings	$
09	Finishes	$
10	Specialties	$
11	Equipment	$
12	Furnishings	$
14	Conveying Equipment	$
*21	Fire Suppression	$
22	Plumbing	$
*23	HVAC Heating, Ventilating, Air Conditioning	$
25	Integrated Automation	$
26	Electrical	$
27	Communications	$
28	Electronic Safety and Security	$
Insurance		$
Bonds		$
Allowance #1	Repair of the original brick exterior wall	$ 2,500.00
Allowance #2	Infill of openings in the original brick exterior wall	$ 5,000.00
Allowance #3	Masonry demolition of CMU infilled openings	$ 2,500.00
Allowance #4	Removal and replacement of deteriorated steel roof deck	$ 5,000.00
Allowance #5	Reseeding of utility trench locations left by CNG	$ 2,000.00
Allowance #6	Plaster wall repair	$ 2,000.00
Allowance #7	Repair if the existing main entry door	$ 3,000.00
TOTAL		$

Whitney Dining Hall Renovations

RFI Log - Project #201687

11/30/2018 15:21

RFI No.	Question	Response
1	Is the Sprinkler Pipe Attachment, per the Detail at Skylight on FP2.01, attached to the Skylight framing? If not, please inform as to what is attached to. Also, is the 3 1/4" integral stiffener the responsibility of the sprinkler contractor? And can we be provided product data on the stiffener?	The sprinkler piping under the skylight is to be attached to the skylight framing per the detail in question. The integral stiffeners are integral to the frame of the skylight to be provided and installed by skylight manufacturer/installer. The profile shown on the detail is accurate and the material of the stiffener is aluminum.
2	Asbestos Abatement information provided in the documents is incomplete. Asbestos Removal and related Work, Section 028200, Page 1, Part 1-General, Section 1.01 General Provisions, Paragraph B "Work to be done under this section is generally shown of Figures ASB (1-4), included at the end of this section. Also, an asbestos-containing materials (ACMs) list is included in Table 1." Neither Figures ASB (1-4) nor Table 1 are included in the specifications. There are no asbestos related drawings in the drawings package either.	Table 1 and figures ASB 1-4 are included as part of Addendum #01.
3	Form of Proposal Page 11 of 19, Item 2A, Work by Subcontractors named: Mechanical without HVAC - we anticipate that the fire protections could exceed $25K, as well as Plumbing. Do we name both subcontractors?	Yes, both subcontractors must be named.
4	Please provide asbestos survey and or directions.	Table 1 and figures ASB 1-4 are included as part of Addendum #01.
5	Who is removing roof, coping and flashing.	The roofing contractor shall be responsible for the removal of the roofing, coping and flashing.
6	Bathroom ceiling is plaster, should read 9.7A?	That is correct. The note should read 9.7A.
7	Who is removing fan coil for re-use.	The mechanical contractor shall be responsible for removing the fan coil on the roof for re-use.
8	Who is protecting terrazzo floor.	The general contractor shall be responsible for protecting the terrazzo flooring.
9	Can the elevator be used to move equipment.	There is not elevator in the building. There is a small dumbwaiter that is being replaced as part of this project.
10	What are the sizes and scope of the penetrations through the basement ceiling.	There are (20) twenty 1" nominal pipe penetrations. (26) Twenty-six 2" pipe penetrations and (1) one 6" pipe penetration. Please provide firestopping at all penetrations.
11	Would we be turning over to the University bulbs, ballasts, and fluid from dumb waiter.	Not required.

12	Will a crane be available for use and is so, at what cost.	No, UConn does not have any lift equipment, lulls or cranes that will be available to the contractor.
13	The spec calls for a 20 year warranty but also calls for an 090 EPDM membrane which carries a 30 year warranty. Do we want 060 with a 20 year or 090 with a 30 year warranty.	Please provide the 30 year warranty with the specified 90 mil EPDM membrane.
14	Alternate #3 calls for repairs to Door number 109. This scope of work references repairs to glass in door and at transom. This glass is leaded glass. There is no specification for this work. I respectfully suggest it might be in everybody's interest and fairer, if this glass work was the subject of an allowance. It's relatively small money but a pain to price. Alternatively, does the University have any specialist subcontractors that could price this work.	See revised specification section 012100 ALLOWANCES for additional allowances added for front door repair.
15	The Bid Form shows five (5) Allowances and Specification Section 01200 3.3 show six (6). Please clarify.	A revised Schedule of Values will be issued to include the sixth allowance.
16	Are we to assume that the existing roof structure is beam and deck with no joists and or concrete?	Yes, the existing roof structure is structural steel with metal decking.
17	The Demolition Section 024119 refers to an abatement report, but none is included. Please clarify.	Table 1 and figures ASB 1-4 are included as part of Addendum #01.
18	There is a reference to Fiberglass Replacement Windows on the plans, but no specifications details and sections are included. Please clarify.	See revised contract drawing A-101 as part of Addendum #01. All references to replacement fiberglass windows have been removed. Existing windows are to remain in place as part of the base bid scope and as part of the alternate scope.
19	What type of finish do the entry doors under Alternate No. 3 Door Restoration receive?	See revised specification section 012100 ALLOWANCES for additional allowances added for front door repair.
20	There is a Section 078100 - Applied Fireproofing, but there is no scope of work shown in the plans. Please clarify.	The scope of the required 1HR fireproofing is shown on drawing GC-101.
21	As the is no know quantity of terrazzo restoration shown on the plans but are we responsible to include it in our bid? Would it not be better to have a unit price for this work? Or, establish fixed allowance of square footage with a unit price.	The scope of the terrazzo surface refinishing is shown on A-102. For the terrazzo crack repair, in the base bid, please provide 100LF of crack repair. In addition, please provide a unit price for the crack repair. See revised specification section 012200 UNIT PRICES for additional unti price added for cterrazzo crack repair.
22	Please provide further detail for Item P20 on A-101 as to size, thickness and configuration of the referenced "stainless steel plate over existing to be removed pipe penetration". And a similar request for Item P24 for "removable stainless steel enclosure for soda lines".	The intent of note P20 is to patch an existing hole in the stainless steel panel that will be left over after an existing pipe penetration is removed. The size of the patch can be assumed to be 12" square. The thickness of the stainless steel patch can be assumed to be 18GA. The intent of note P24 is to cover soda lines that will be coming from the basement, going through the dish room and above the ceiling in the dish room. This stainless chase can be assumed to be 9" x 9" with a height of 8'-0". The stainless steel chase can be assumed to be 16GA. The attachment method and removable aspect of the chase shall be coordinated by the Contractor.
23	Several type "F" Hollow Metal Doors are listed on the Door Schedule but there is no elevation for a Type F. Please advise,	Door Type F is a flush door.
24	In regards to Kitchen Equipment Section 114000, please clarify the responsibilities of the General Contractor when it is noted, "By Vendor", or no notation.	The responsibilities of the GC will be to coordinate all details, dimensions and utility requirements in the field with the KEC. This is noted on our documents.

25	Are Specification section 123616 Metal Millwork and 114000 Food Service Equipment related? If so, can the Metal Millwork items be identified in the Food Service Equipment Utility Schedule and the stainless steel components such as counters and cabinets be noted on the sections and details on the plans for the purpose of clarity.	Section 114000 Foodservice Equipment has descriptions of all stainless steel components shown on the Foodservice Drawings. Section 123616 Metal Millwork can be deleted.
26	The Invitation to Bid noted that the construction start date is May 13, 2019 with a Substantial Completion Date of August 26, 2019. In the Specifications 011000-5. Paragraph 1.7, it listed the start date of May 8, 2018 with the Completion date as August 28, 2019. Please clarify	May 13th, 2019 is the official start date of construction.
27	We are requesting additional documentation to be able to generate a proper and accurate estimate as the current documents do not include sequence of operations and control schematics for major mechanical equipment such as EF-1, EF-2, ERV-1 and MUA-1. Please provide sequence operations and control schematics of equipment controlled by the Direct Digital Control (DDC) System.	EF-1 Sequence of Operations: EF-1 to operate in kind with the existing controls serving the lower level hood. ERV-1 Sequence of Operations: ERV-1 to operate during occupied times and based on demand control ventilation. MUA-1 & EF-2 Sequence of Operations: MUA-1 and EF-2 to be interlocked to operate when the Serving Station hood is utilized. MUA-1 to modulate heating operation based on supply air temperature.
28	Specification Section 114000: Please provide the millwork manufacturer. There is no mfg. listed I the specs nor the drawings.	The millwork is specified as “Millwork – Custom”. This is typical spec for custom millwork and stainless fab. This allows the bidding KEC to bid out these items to their preferred millworkers and fabricators.
29	Roof Hatch detail 3/A-611 calls for a fixed steel ladder at the opening. The Project Spec fiction Section 113300 and Roof Plan A-301 note R07 calls for retractable stairs. Please verify if it is a fixed steel ladder or a retractable stair.	The note for the fixed ladder on detail 3/A-611 is incorrect. The ladder required shall be retractable.
30	Please confirm the required lift below base distance for the Portable Davit Roof Top Crane.	The lift below base distance shall be 30'-0".
31	Project Specification Section 085400 (Fiberglass Window) is noted in the specification index but is not provided. Please advise.	See revised contract drawing A-101 as part of Addendum #01. All references to replacement fiberglass windows have been removed. Existing windows are to remain in place as part of the base bid scope and as part of the alternate scope.
32	Specification Section 123616 Metal Millwork for stainless steel base and wall cabinets refers to Continental Metal Products, Inc. as the basis of design manufacturer. Continental Metal Products, Inc. has informed us that it strictly provides product for the health care industry and will not provide quotes for the material required for this project. Please advise.	Section 114000 Foodservice Equipment has descriptions of all stainless steel components shown on the Foodservice Drawings. Section 123616 Metal Millwork can be deleted.
33	Electrical Panel KP3 shown on drawing EP-101 is not noted as a new panel. Please advise.	Panels "KP1/2-NEW" and "KP3" are all new as shown on the riser diagram on E-601. Panel schedules for these panels are shown on drawing E-501
34	The "Invitation to Bid" page 3 of 3 notes Exterior improvement Work including retaining walls, paving, fencing, and landscaping. Please confirm this work is reference only for lay down area repairs and is not for any new work required.	Please review again as these are areas where it suggests SBE/MBE contractors can be utilized.

35	The "Invitation to Bid" Project description states that the liquidated damages are $5,000 per day after the Substantial Completion date of August 26, 2019. This is conflicting with the "Instructions to Bidders", under 4.6 - Liquidated Damages which states a $500 per day. Please advise.	The Instructions to Bidders will be revised to reflect that the Liquidated Damages is $5,000 per day.
36	In Specification Section 011000-5 "Summary", it states that work on site may not commence sooner than May 8, 2019. This is conflicting with the Project Manual "Invitation to Bid" form, under project description where is states May 13, 2019 to be the planned construction start date. Please advise.	May 13th, 2019 is the official start date of construction.
37	In the Project Manual under "Form of Proposal", page 10 lists five (5) Allowances. This is conflicting with the Project Specification Section 012100-4 which lists six (6) Allowances.	A revised Schedule of Values will be issued to include the sixth Allowance.
38	In Project Specification Section 0117100-1. Asbestos Removal and Related Work under General Provisions 1.01-B states "Work to be done under this section generally shown on Figures ASB-(1-4) included at the end of this section". ASB-(1-4) is not provided after section. Please advise.	Table 1 and figures ASB 1-4 are included as part of Addendum #01.
39	Project Specification section 101419 "Dimensional Letter Signage" is referenced. Please advise where this signage occurs.	The signage occurs on interior elevation 3/A-501.
40	Please confirm that there will be an extension to the Bid Due Date.	See specfication
41	Spray on Fire-Resistive Material does not appear to be shown on drawings but is called for on Project Specification Section 078100 "Applied Fireproofing".., Please advise.	The scope of the required 1HR fireproofing is shown on drawing GC-101.
42	Please confirm who is responsible for the removal and re-installation of existing kitchen equipment to be reused.	The KEC contractor is responsible from the removal and reinstallation of existing kitchen equipment to be reused. See specification 114000 FOODSERVICE EQUIPMENT, paragraph 1.08 for more information.

shall adjust the Contract Price to reflect the difference between the amount of the price of the new Subcontractor and the amount of the price of the listed Subcontractor, if the new Subcontractor's price is lower and may adjust such Contract Price, if the new Subcontractor's price is higher. The general Bidder shall, with respect to each listed Subcontractor or approved substitute Subcontractor, file with the University a copy of each executed subcontract within ten days, Saturdays, Sundays and legal holidays excluded, of presentation of a subcontract to such Subcontractor.

.3 In the event of any conflict or inconsistency between the University of Connecticut's Subcontract form and the Contractor's standard Subcontract form, the provisions of the University of Connecticut's Subcontract form shall prevail. Any standard Subcontract form used will be attached as a supplement to the University of Connecticut's Subcontract form.

4.6 LIQUIDATED DAMAGES - Revised 11/30/18

4.6.1 Liquidated Damages of **Five Thousand and 00/100 Dollars ($5,000.00)** per calendar day shall be assessed if the Contractor fails to achieve Substantial Completion, or causes delay to the Substantial Completion of any portion of the Work within the Contract Time.

4.7 **COMMISSION ON HUMAN RIGHTS AND OPPORTUNITIES CONTRACT COMPLIANCE REGULATIONS:**

The contract to be awarded is subject to contract compliance requirements mandated by Sections 4a-60 and 4a-60a of the Connecticut General Statutes; and, when the awarding agency is the State, Sections 46a-71(d) and-81i(d) of the Connecticut General Statutes. There are Contract Compliance Regulations codified at Section-68j-21 through 43 of the Regulations of Connecticut State Agencies, which establish a procedure for awarding all contracts covered by Sections 4a-60 and 46a-71(d) of the Connecticut General Statutes. According to Section 46a-68j-30(9) of the Contract Compliance Regulations, every agency awarding a contract subject to the contract compliance requirements has an obligation to "aggressively solicit the participation of legitimate minority business enterprises as bidders, contractors, subcontractors and suppliers of materials." Minority business enterprise" is defined in Section 4a-60 of the Connecticut General Statutes as a business wherein fifty-one percent or more of the capital stock, or assets belong to a person or persons: "(1) Who are active in daily affairs of the enterprise; (2) who have the power to direct the management and policies of the enterprise; and (3) who are members of a minority, as such term is defined in subsection (a) of Section 32-9n." "Minority" groups are defined in Section 32-9n of the Connecticut General Statutes as "(1) Black Americans . . .(2) Hispanic Americans . . . (3) persons who have origins in the Iberian Peninsula . . . (4)Women . . . (5) Asian Pacific Americans and Pacific Islanders; (6) American Indians . . ." An individual with a disability is also a minority business enterprise as provided by Section 4a-60g of the Connecticut General Statutes. The above definitions apply to the contract compliance requirements by virtue of Section 46a-68j-21(11) of the Contract Compliance Regulations. The awarding agency will consider the following factors when reviewing the bidder's qualifications under the contract compliance requirements:(a) the bidder's success in implementing an affirmative action plan;(b) the bidder's success in developing an apprenticeship program complying with Sections 46a-68-1 to 46a-68-17 of the Administrative Regulations of Connecticut State Agencies, inclusive;(c) the bidder's promise to develop and implement a successful affirmative action plan;(d) the bidder's submission of